# Midnite Mine Superfund Site

# 100~~90~~ Percent Design

# Appendix L – Remedial Action Health and Safety Plan

~~*Note: This Remedial Action Health and Safety Plan (HASP) has been prepared to a 90-percent level. Minor edits to this HASP are anticipated as the Midnite Mine Remedial Design is finalized.*~~

## June 2015~~July 31, 2014~~

Prepared for:

**Dawn Mining Company**
PO Box 250
Ford, Washington 990413

and

**Newmont USA Limited**
6363 South Fiddler's Green Circle
Greenwood Village, Colorado 80111

Prepared By:

**MWH Americas, Inc.**
2890 E. Cottonwood Parkway, Suite 300
Salt Lake City, UT 84121

## APPROVALS

This Midnite Mine Superfund Site Remedial Action Health and Safety Plan (HASP) has been reviewed and approved by the following:

| Name | Title | Date |
|---|---|---|
| _____ | DMC/Newmont Site Construction~~General~~ Manager | _____ |
| _____ | DMC/Newmont Site Safety Manager~~Officer~~ | _____ |
| _____ | DMC/Newmont Radiation Safety Officer ~~Site Operations Manager~~ | _____ |

Changes to the HASP as described in this document, must be reviewed and approved by the above individuals~~Site Safety Officer and the Site Operations Manager~~.

One controlled hard copy of this HASP will be maintained at the Midnite Mine administrative and safety office(s),~~) main offices,~~ and one must be accessible at the Midnite Mine work site at all times during work.

## TABLE OF CONTENTS


**L1.0 INTRODUCTION ..... 1**

L1.1 CONTRACTOR AND SUBCONTRACTOR RESPONSIBILITIES ..... 3

L1.1.1 Competent Person ..... 3

L1.1.2 Contractor/Subcontractor Safety and Health Plan ..... 3

L1.2 MULTIPLE EMPLOYER PROJECTS ..... 5

L1.2.1 Differing Opinions ..... 5

L1.3 UNSAFE CONDITIONS ..... 5

L1.4 JOB SAFETY ANALYSIS AND STANDARD OPERATION PROCEDURES ..... 6

L1.5 PROJECT ORGANIZATION ..... 6

L1.5.1 Company Site Construction Manager ..... 7

Manager, ..... 7

L1.5.2 Company Site Safety Manager ..... 8

L1.5.3 Company Radiation Safety Officer ..... 9

L1.5.5 Contractor Safety Officer ..... 10

L1.5.6 Field Personnel Responsibilities ..... 11

**L2.0 GENERAL HEALTH AND SAFETY REQUIREMENTS ..... 12**

L2.1 SITE SAFETY MEETINGS ..... 13

L2.2 ACCIDENT/INCIDENT REPORTING ..... 13

L2.3 PROHIBITED ACTIVITIES ..... 14

L2.4 VISITOR CLEARANCE ..... 14

L2.5 MEDICAL SURVEILLANCE ..... 14

L2.6 GENERAL PERSONAL PROTECTIVE EQUIPMENT ..... 15

L2.6.1 Levels of PPE ..... 15

L2.6.2 Respiratory Protection ..... 17

L2.6.3 PPE Policies ..... 18

L2.7 PERSONAL HYGIENE ..... 18

L2.8 DECONTAMINATION ..... 18

L2.9 EMERGENCY RESPONSE ..... 18

L2.9.1 Lines of Authority ..... 18

L2.9.2 Emergency Information ..... 19

L2.9.3 Evacuation Procedures ..... 19

L2.9.4 Emergency Medical Treatment ..... 19

L2.9.5 Incident Investigation ..... 20

L2.9.6 First Aid ..... 20

L2.9.7 Spill Containment ..... 20

L2.9.8 Communications ..... 21

L2.10 TRAINING ..... 21

L2.10.1 Required Courses and Meetings ..... 21

L2.10.2 Worker Right to Know ..... 21

L2.10.3 Emergency Recognition ..... 22

L2.10.4 Physical Hazards ..... 22

L2.10.5 Radiation Training ..... 22

L2.11 RECORDS ..... 22
L2.12 ADDENDA – MODIFYING THIS HASP AND CHANGE MANAGEMENT ..... 22
**L3.0 SPECIFIC HEALTH AND SAFETY REQUIREMENTS ..... 23**
L3.1 WORK ACTIVITIES ..... 23
L3.2 APPLICATION OF STANDARDS ..... 24
L3.3 CHEMICAL HAZARDS ..... 24
L3.4 PHYSICAL HAZARDS ..... 28
L3.4.1 Earthmoving Equipment Operation ..... 28
L3.4.2 Excavating and Trenching ..... 28
L3.4.3 Confined Space ..... 29
L3.4.4 Ladders and Scaffolding ..... 29
L3.4.5 Overhead and Highwall Hazards ..... 30
L3.4.6 Power and Hand Tools ..... 30
L3.4.7 Electrical Hazards ..... 31
L3.4.8 Underground Utilities or Buried Materials ..... 31
L3.4.9 Overhead Power Lines ..... 31
L3.4.10 Steep Slopes and Tripping Hazards ..... 31
L3.4.11 Fire and Explosion Hazards ..... 32
L3.5 SLIPS, TRIPS, AND FALLS ..... 32
L3.6 VEHICLE AND EARTHMOVING EQUIPMENT SAFETY ..... 33
L3.7 EXTREME TEMPERATURES AND ADVERSE WEATHER CONDITIONS ..... 34
L3.7.1 Cold Stress ..... 34
L3.7.2 Heat Stress ..... 36
L3.7.3 Adverse Weather Conditions ..... 38
L3.8 BIOLOGICAL HAZARDS ..... 39
L3.8.1 Animals ..... 39
L3.8.2 Insects ..... 40
L3.8.3 Snakes ..... 40
L3.8.4 Poisonous Plants ..... 40
L3.8.5 Bacteria and Viruses ..... 40
L3.9 AIR MONITORING REQUIREMENTS AND PROTECTIVE MEASURES ..... 41
L3.9.1 Organic Vapors ..... 41
L3.9.2 Flammable Vapors ..... 41
L3.9.3 Equipment, Calibration, and Maintenance ..... 42
L3.10 NOISE MONITORING REQUIREMENTS ..... 42
L3.11 ENGINEERING CONTROLS ..... 42
**L4.0 REFERENCES ..... 42**

## LIST OF TABLES

Table L-1 – Key Personnel ..... 6

Table L-2 – External Contacts ..... 19

Table L-3 – Chemical and Toxicological Characteristics of Site Constituents (Metals) ..... 25

Table L-4 – Cooling Power of Wind on Exposed Flesh Expressed as an Equivalent Temperature ..... 35

Table L-5 – Cold Stress Conditions ..... 36

Table L-6 – Heat Stress Conditions ..... 37

## LIST OF FIGURES

Figure L-1 Decontamination Area and Exclusion Zone

## LIST OF ATTACHMENTS

Attachment L-1 Radiation Protection Plan

Attachment L-2 Example Job Safety Analysis

Attachment L-3 Safety Compliance Form and Accident Report Form

Attachment L-4 Hospital Route Map

## LIST OF ACRONYMS

| | |
|---|---|
| ACGIH | American Conference of Governmental Industrial Hygienists |
| ~~AIHA~~ | ~~American Industrial Hygiene Association~~ |
| AL | OSHA Action Level |
| ALARA | as low as is reasonably achievable |
| ANSI | American National Standards Institute |
| | |
| CERLCA | Comprehensive Environmental Response, Compensation, and Liability Act |
| CFR | Code of Federal Regulations |
| CPR | cardiopulmonary resuscitation |
| CSHP | Contractor/Subcontractor Safety and Health Plan |
| Company | DMC / Newmont |
| CQAO | Construction Quality Assurance Officer |
| CRSP | Colorado Rockfall Simulation Program |
| ~~CS~~ | ~~Construction Superintendent~~ |
| CSZ | construction support zone |
| CY~~cy~~ | cubic yard |
| | |
| dBA | A-weighted decibel |
| DMC | Dawn Mining Company, LLC |
| | |
| EPCRA | Emergency Planning and Community Right-to-Know Act |
| EPA | U.S. Environmental Protection Agency |
| | |
| HASP | Health and Safety Plan |
| HAZCOM | Hazard Communication |
| HAZWOPER | Hazardous Waste Operations and Emergency Response |
| HDPE | high density polyethylene |
| | |
| IDLH | Immediately Dangerous to Life or Health |
| | |
| JSA | Job Safety Analysis |
| | |
| m | meter |
| $mg/m^3$ | milligram per cubic meter |
| MSDS | Material Safety Data Sheet |
| MSHA | Mine Safety and Health Administration |
| MWH | MWH Americas, Inc. |
| | |
| Newmont | Newmont USA Limited |
| NIOSH | National Institute for Occupational Safety and Health |
| NRC | U.S. Nuclear Regulatory Commission |
| | |
| OSHA | Occupational Safety and Health Administration |
| | |
| PEL | Permissible exposure limits |
| PPE | Personal protective equipment |
| ~~PSO~~ | ~~Project Safety Officer~~ |
| | |
| RA | Remedial Action |

| | |
|---|---|
| RAWP | Remedial Action Work Plan |
| RCRA | Resource Conservation and Recovery Act |
| RD | Remedial Design |
| RI | Remedial Investigation |
| RPP | Radiation Protection Plan |
| ~~RSO~~ | ~~Radiation Safety Officer~~ |
| ~~RST~~ | ~~Radiation Safety Technician~~ |
| SDS | Safety Data Sheet (formerly Material Safety Data Sheet) |
| ~~SGM~~ | ~~Site General Manager~~ |
| Site | Midnite Mine Superfund Site |
| ~~SOM~~ | ~~Site Operations Manager~~ |
| SOP | standard operating procedure |
| ~~SSO~~ | ~~Site Safety Officer~~ |
| TLV | threshold limit values |
| TWA | time-weighted average |
| USC | United States Code |
| USDHHS | U.S. Department of Health and Human Services |
| WAC | Washington Administrative Code |
| WISHA | Washington Industrial Safety and Health Act |
| WTP | Water Treatment Plant |

# L1.0 INTRODUCTION

The Midnite Mine Superfund Site (Site) is an inactive, open-pit hard rock uranium mine that is being remediated under the Comprehensive Environmental Response, Compensation, and Liability Act (CERCLA) program. The Site is located in Washington State, approximately 40 air miles northwest of Spokane, Washington. The Site includes inactive open pits, disposal areas (waste rock/protore), and media impacted by mine-related contamination. Contaminants at the Site include radionuclides and heavy metals mobilized as a result of mining activities and environmental processes, such as acid rock drainage, radioactive decay, and particulate transport.

This Health and Safety Plan (HASP) describes the minimum health, safety and emergency response requirements for performing Remedial Action (RA) activities at the Site.

This HASP has been prepared on behalf of Dawn Mining Company LLC (DMC) and Newmont USA Limited (Newmont), and is applicable to all DMC/Newmont employees, contractors, and subcontractors involved with the RA. It establishes general safety requirements, and procedures for the protection of personnel and to prevent and minimize personal injuries, illnesses and physical damage to equipment, supplies, and property.

The work covered by this HASP will be conducted by DMC/Newmont (Company), its contractors and their subcontractors. Company personnel, contractors, subcontractors, suppliers, visitors, and all personnel engaged in work at the Site shall comply with all provisions of this HASP. This HASP shall not be modified without written approval of DMC/Newmont.

DMC/Newmont cannot anticipate all the hazards inherent to all contractor and subcontractor work activities. Therefore, each contractor and subcontractor will be required to read and evaluate this HASP to ensure that it adequately addresses the hazards presented to their employees. This HASP presents the minimum requirements for all contractors and subcontractors. Addenda may be attached to this~~the~~ HASP to ensure that additional potential risks are controlled for Site activities, and are addressed in contractor-prepared safety plans (see Section L1.1.2).~~.~~

Since there is a potential for exposure to radiation above background levels, the Radiation Protection Plan (RPP), included as Attachment L-1 to this HASP, describes radiation hazards, safety requirements, training and policies, and the requirement that radiation doses be kept as

low as is reasonably achievable (ALARA). Specific radiation safety procedures applicable to the RA are covered in the RPP.

This HASP was prepared using the Occupational Safety and Health Guidance Manual for Hazardous Waste Site Activities (USDHHS, 1985). This site-specific HASP presents safety and health procedures designed to minimize potential risks of harm to personnel working on the Site. These procedures were developed in accordance with the list of regulatory guidelines, presented below, as applicable and appropriate. Individual contractor activity may be regulated under the Occupational Safety and Health Administration (OSHA) General Industry Standard, Mine Safety and Health Administration (MSHA), U.S. Nuclear Regulatory Commission (NRC), and/or Construction Standards to ensure a consistent and conservative risk management. Specific hazards in this HASP may specify the more stringent or prescriptive of the standards. The majority of operations conducted during the RA are primarily regulated by OSHA and/or the NRC. Since this is an inactive mine site formerly regulated by MSHA, Newmont/DMC and its contractors/subcontractors may utilize applicable MSHA best practices for managing specific mine hazards. These operations include but are not limited to:

- Ground Control for Rockfalls & Highwalls (30 CFR Part 56 Subpart B)
- Ground Control for Berms (30 CFR Part 56 Subpart B)
- Loading, Hauling, Dumping & Traffic Safety (30 CFR Part 56 Subpart H)
- Machinery (30 CFR Part 56 Subpart M)

This HASP was developed with the intent that regardless of the activity, all activities are compliant with the following regulatory and consensus standards:

- Occupational Safety and Health Administration (OSHA) Title 29 Code of Federal Regulations (CFR), Part 1910 (General Industry Standards)
- Occupational Safety and Health Administration (OSHA) Title 29 Code of Federal Regulations (CFR), Part 1926 (Construction Standards)
- NRC Standards for Protection against Radiation included in 10 CFR 20
- American National Standards Institute (ANSI), N14.1 Nuclear Materials - Uranium Hexafluoride - Packaging for Transport and N14.5 Radioactive Materials - Leakage Tests on Packages for Shipment
- Washington Industrial Safety and Health Act (WISHA), to include but not limited to:

- Washington Administrative Code (WAC), Parts 296-24, 296-45, 296-62, 296-155, 296-200, 296-800, 296-809, 296-817, 296-843, and 296-876

## L1.1 CONTRACTOR AND SUBCONTRACTOR RESPONSIBILITIES

Any Site Contractor or Subcontractor shall ensure compliance with all applicable Federal, State, and local laws, rules, regulations, and guidelines governing safety, health and sanitation, including but not limited to the Contractor/Subcontractor Safety and Health Plan described below, the Occupational Safety and Health Act, 29 CFR 1910, 29 CFR 1926, 10 CFR 20, 296 WAC 296-155, and the Drug-Free Workplace Act (Public Law 100-690 Title V, subtitle D, 41 USC 701 et seq.). The Contractor/Subcontractor shall provide all safeguards, safety devices, and protective equipment, and shall take any other actions necessary to protect the life, safety and health of persons working at or visiting the project Site, the public, and the property in connection with the performance of the work covered by the Contract. The Contractor/Subcontractor shall take every reasonable precaution to minimize any dangers or hazards to their employees. In the case of conflicting requirements, the more stringent of the requirements shall apply. The Contractors/Subcontractors will be held accountable for the safety performance of their employees including lower tier subcontractors.

### L1.1.1 Competent Person

Prior to start of work, the Contractor/Subcontractor shall designate at least one competent person for each of the operations being completed. The appropriate competent person(s) shall be present on the project Site at all times during construction activities. A competent person is an individual who, by way of training, experience, or combination thereof, is knowledgeable of applicable standards, is capable of identifying existing and predictable workplace hazards relating to the specific operation, is designated by the employer, and has authority to take appropriate actions.

### L1.1.2 Contractor/Subcontractor Safety and Health Plan

Prior to the start of any work, the Contractor/Subcontractor shall prepare a Contractor/Subcontractor Safety and Health Plan (CSHP), which shall be specific to the project. The CSHP shall include:

1) A hazard assessment for each work site activity and job classification required in the activity area.

2) Direction as to whether engineering, administrative, personal protection measures, training, or a combination thereof, shall be implemented to address the hazards

identified above. Measures shall include but are not limited to fall protection, hearing protection, respiratory protection, confined space protection, excavation protection, and measures to address any other work zone activities.

3) Provisions for regular informal safety meetings. The Contractor/Subcontractor Project Safety Officer or designated representative shall conduct safety meetings with their employees at the frequency specified in the CSHP, once per week at a minimum, but preferably at the start of each shift. The Contractor/Subcontractor shall encourage participation by all personnel working at the project Site. For tasks/projects involving multiple Contractors/Subcontractors, combined safety meetings are allowed and encouraged. Participants at these meetings shall discuss specific work activities for that shift, safe work practices, results off~~from~~ safety inspections, required personal protective equipment, and all other necessary safety precautions.

4) Provisions for more formal safety meetings to discuss accidents, incidents, safety goals, and results of safety inspections. The Contractor/Subcontractor shall notify the Company personnel –of the time, date, and location of these meetings, and shall encourage participation by all persons working at the project Site.

5) Procedures for assuring compliance by their subcontractors, suppliers, and authorized visitors to the project. In addition, the CSHP shall specify the measures that will be taken to discourage unauthorized personnel from entering the Site~~site~~.

6) Measures that will be taken in cases where workers are suspected of drug or alcohol impairment.

7) Provisions for regular safety inspections. The Contractor/Subcontractor shall conduct regular safety inspections at the frequency specified in the CSHP. The Subcontractor shall provide documentation to the Construction Quality Assurance Officer (CQAO) of the date of these inspections, the findings, and the measures taken to address the findings.

8) The disciplinary measures that shall be taken to correct violations of the CSHP.

9) The notification, investigation, and implementation procedures that the Contractor/Subcontractor shall follow in the case of a safety stand down.

The Contractor/Subcontractor shall submit the CSHP to the Company for the project records, and shall provide updates to the CSHP as necessary. An up-to-date copy of the CSHP shall be at the project site in the Contractor's/Subcontractor's possession at all times.

## L1.2 MULTIPLE EMPLOYER PROJECTS

Under OSHA, each employer is required to provide a safe and healthy working environment for employees. When several employers are working simultaneously on the project, the activities of one employer could expose personnel of another company to a hazard.

Where an employer creates unsafe conditions, the exposing employer shall be responsible for exercising reasonable diligence to discover the condition, and for taking steps to protect their personnel. When the exposing employer has authority to correct the hazard, it shall do so. Where the exposing employer lacks the authority to correct the hazard, the employer shall ask the creating and/or controlling employer to correct the hazard; inform its personnel of the hazard; and take reasonable alternative protective measures. In extreme circumstances (e.g., imminent danger situations), the exposing employer shall remove their personnel from the area to avoid the hazard.

Each Contractor/Subcontractor will be held accountable for compliance with 296 WAC 296-155, 29 CFR 1926 and/or 1910, and 10 CFR 20. All Contractors/Subcontractors must protect their employees from hazards, regardless of who created them.

### L1.2.1 Differing Opinions

When a dispute or difference of opinion occurs between Company and Contractor/ Subcontractor personnel concerning any interpretation of the safety practices as found in this plan or the Contractor's/Subcontractor's CSHP, the most stringent plan shall be the controlling plan. The subcontractor shall not start or continue with work until the safety practices and procedures in dispute are resolved to the satisfaction of all applicable senior management personnel.

## L1.3 UNSAFE CONDITIONS

The Contractor/Subcontractor shall immediately correct any unsafe conditions that are brought to its attention. When unsafe conditions are not corrected to the satisfaction of the Company or Contractor/Subcontractor management personnel, or the Contractor/Subcontractor fails to correct the unsafe conditions and/or repeatedly fails to comply with the safety and health requirements as found in 296 WAC 296-155, 29 CFR 1926 or 1910, or 10 CFR 20, specific work

activities will stop. All Company, Contractor, or Subcontractor personnel have the authority and responsibility to stop work associated with unsafe or unhealthy workplace conditions or acts. The work stoppage will be in place until the corrective steps to eliminate the unsafe conditions or acts are taken.

## L1.4 JOB SAFETY ANALYSIS AND STANDARD OPERATION PROCEDURES

Each ~~Remedial Action Work Plan (RAWP) and each~~ CSHP will include Standard Operating Procedures (SOPs) for routine RA work activities and a Job Safety Analysis (JSA~~Analyses (JSAs~~) for any non-routine~~the~~ RA task (or combination of tasks) that present ~~any~~ health or safety risks. Each SOP and JSA will detail the task, identify the task-specific hazards and the measures to eliminate or control those hazards. To support the development of JSAs that are fit-for-purpose, an example JSA is included in Attachment L-2. If established standard operating procedures (SOPs) provide safe work practices and protective measures, they may be referred to by reference in a JSA (must be attached to the JSA), but they do not replace a JSA. The JSA contains site-specific information that will not be included in the contractor's SOP(s).

## L1.5 PROJECT ORGANIZATION

Key~~The key~~ health and safety personnel are listed in Table L-1. The authorities, responsibilities and qualifications for key personnel are discussed below. Contractors/Subcontractors are required to provide a Project Safety Officer responsible for the health and safety of their personnel, subcontractors, vendors, and visitors.

**Table L-1 – Key Personnel**

| Personnel | Name | Affiliation | Phone (Work) | Phone (Other) |
|---|---|---|---|---|
| Site Construction ~~General~~ Manager | TBD~~William Lyle~~ | DMC/Newmont | ~~509-258-4511~~ | ~~303-667-4575~~ |
| Site Safety~~Operations~~ | TBD~~Bobby Nelson~~ | DMC/Newmont | ~~509-258-4511~~ | ~~509-936-5272~~ |
| Radiation~~Site~~ Safety Officer | TBD~~Gerald Cates~~ | DMC/Newmont | ~~509-258-4511~~ | ~~509-999-2556~~ |
| Contractor Superintendent~~Radiation Safety Officer~~ | TBD | Contractor~~DMC/Newmont~~ | ~~970-319-1808~~ | |
| Contractor Site~~Project~~ Safety Officer | TBD for each project | Contractor | | |

### L1.5.1 Company Site Construction~~General~~ Manager

The Company Site Construction~~General~~ Manager ~~(SGM)~~ has overall responsibility for project worker safety and to assure that RA work activities comply with the health and safety requirements and guidelines of this HASP, including the RPP in Attachment L-1.~~.~~ The Company Site Construction Manager~~SGM~~ is responsible for ensuring the necessary resources (qualified personnel, equipment, supplies, etc.) are being provided to the project. The Company Site Construction Manager~~The SGM~~ also is responsible for procuring Contractors/Subcontractors that are qualified to perform in accordance with this HASP. The Company Site Construction Manager~~SGM~~ directs the Company~~Site Operations Manager,~~ Site Safety ~~Officer and Radiation Protection Officer (described below).~~

### ~~L1.5.2 Company Site Operations~~ Manager,

~~The Company Site Operations Manager (SOM) is responsible for the daily on-Site implementation and compliance with this HASP.~~

~~The responsibilities of the Company SOM are as follows:~~

- ~~Overall responsibility for all aspects of work at and near the Site, including compliance with this HASP~~
- ~~Monitoring the quality of the technical and managerial aspects of the project~~

~~The Company SOM has the authority (safety-related) to:~~

- ~~Take actions necessary to ensure that the staff are technically and professionally qualified, have obtained the required safety training, have adequate relevant experience, and represent sufficient resources to meet project health and safety objectives.~~

- ~~Ensure that appropriate radiation protection principles are applied and that all~~ Company Radiation Safety Officer, and all Contractor/Subcontractor safety personnel. ~~employees and Contractors/Subcontractors are trained and monitored in accordance with regulatory requirements and the Company's ALARA Policy. (The SOM may delegate this responsibility to a qualified individual.)~~
- ~~Conduct or cause to be conducted appropriate reviews to ensure that the HASP is properly implemented.~~
- ~~Implement corrective measures if and where appropriate.~~

### ~~L1.5.3~~L1.5.2 Company Site Safety Manager ~~Officer~~

The Company Site Safety Manager~~Officer (SSO)~~ reports to the Company Site Construction Manager~~SGM~~ and has responsibility for the implementation of the industrial safety provisions of the~~this~~ HASP and conformance with all applicable worker safety and health regulations, as appropriate. The Company Site Safety Manager~~SSO~~ is the primary contact for matters relating to health and safety. The Company Site Safety Manager~~SSO~~ must approve any changes to the HASP ~~or changes to the JSAs~~ that could affect worker~~impact~~ health and safety requirements.~~.~~ The Company Site Safety Manager~~SSO~~ is responsible for resolving any health and safety issues that arise out of the work. The Company Site Safety Manager~~SSO~~ coordinates with the Company Radiation Safety~~Protection~~ Officer (described below) to ensure that both this HASP and the RPP included in Attachment L-1 are effectively implemented. The Company Site Safety Manager~~SSO~~ coordinates with the Contractor Project Safety Officer (described below) to ensure the CSHP is being effectively implemented, and that tasks/projects involving multiple Contractors/Subcontractors are coordinated. The responsibilities of the Company Site Safety Manager~~SSO~~ are:

- Direct health and safety related activities, such as coordinating combined safety meetings among multiple Contractors/Subcontractors.
- Report all safety and health related incidents or accidents immediately to the Company Site Construction Manager~~SGM and SOM~~.
- Assist in all aspects of implementing the HASP.
- Conduct industrial hygiene~~air~~ monitoring~~/ sampling~~ and interpreting results.
- Maintain health and safety equipment.

- Implement emergency procedures as required.
- Evaluate the effectiveness of the HASP and reporting deficiencies as needed.
- Enforce the buddy system, where necessary, so that workers are observed by at least one other worker in the work group. The purpose of the buddy system is to maintain communication between workers and provide rapid assistance in the event of an emergency.
- Maintain a health and safety log as outlined in Section L2.11 of this HASP.
- Maintain records of HASP compliance agreements for all staff and contractors.
- Conduct safety meetings as required.
- Define limited access zones (based on potential hazards) on a task by task basis.
- ~~Monitor personnel for signs of stress, such as cold exposure, heat stress, and fatigue.~~
- Implement radiation protection procedures as directed by the Company Radiation Safety Officer ~~RSO, SOM~~ or his/her designee.
- Act as Emergency Coordinator in the event of an emergency.

The Company Site Safety Manager~~SSO~~ has authority to:

- Suspend work or otherwise limit exposure to personnel if health and safety conditions appear to be unsuitable or inadequate
- Upgrade and downgrade levels of protection based on air monitoring data

### ~~L1.5.4~~L1.5.3 Company Radiation Safety Officer ~~and Radiation Safety Technician~~

The Company Radiation Safety Officer ~~(RSO)~~ reports to the Company Site Construction Manager~~SGM~~ and is the individual responsible for oversight of the activities related to radiation safety. The Company Radiation Safety Officer~~The RSO~~ coordinates with the Company Site Safety Manager~~SSO (described above)~~ to ensure that both this HASP and the RPP included in Attachment L-1 are effectively implemented. ~~The RSO will be supported by a Radiation Safety Technician (RST).~~ The responsibilities for the Company Radiation Safety Officer~~RSO/RST~~ are described in the RPP included in Attachment L-1.

### L1.5.4 Contractor Superintendent

The Contractor Superintendent has the overall responsibility for ensuring that all contractor/subcontractor personnel comply with the health and safety requirements and guidelines of this HASP, as well as the CSHP. The Contractor Superintendent is responsible for ensuring the necessary contractor/subcontractor resources (qualified personnel, equipment, supplies, etc.) are being provided to the project. The Contractor Superintendent reports to the Company Site Construction Manager and directs the Contractor Site Safety Officer.

### L1.5.5 Contractor~~Project~~ Safety Officer

First-tier Contractors are required to provide a Site~~Project~~ Safety Officer ~~(PSO)~~ responsible for the health and safety of their personnel, subcontractors, vendors and visitors. The Contractor Site Safety Officer~~PSO~~ reports to the Contractor Superintendent ~~(CS) and the CQAO~~.

The Contractor Site Safety Officer~~The PSO~~ is responsible for:

- Coordinating with the Contractor Superintendent, Company Site Safety Manager, Company Radiation Safety Officer on health and safety matters
- Providing SOPs/JSAs that list requirements for specific tasks and types of equipment for each activity
- Conducting regular safety meetings
- Performing regular safety inspections at the frequency specified in the CSHP
- Coordinating changes to the HASP with the Company Site Safety Manager~~SSO~~ relating to specific work activities
- Correcting work practices or conditions that may result in injury or exposure to hazardous substances
- The Contractor Site Safety Officer~~Coordinating with the CQAO, CS, SOM, SSO, and RSO/RST on health and safety matters~~

~~The PSO~~ has authority to:

- Suspend field activities if the health and safety of personnel become endangered.
- Suspend personnel or subcontractors from field activities for infractions of the health and safety plan, pending an evaluation by the Company Site Construction Manager.~~CQAO~~

### L1.5.6 Field Personnel Responsibilities

Management of safety by the Company Site Safety Manager, Company Radiation Safety Officer, or Contractor Site Safety Officer~~SGM, CQAO, CS, SOM, SSO, RSO/RST, or PSO~~ does not relieve any employee of his or her responsibility to perform work according to safe work practices. The employee must know who to contact for safety questions and concerns, where the Work Plans are kept, who to contact for first-aid, and the names, locations and telephone numbers of emergency medical services. All written and oral safety rules must be observed recognizing particular job-associated hazards. The employee is responsible for observing the following general safe work practices:

1) A job shall not be started until proper instructions have been received and understood.

2) Any hazardous conditions, unsafe equipment, or unsafe working practice shall be reported to the supervisor immediately.

3) All injuries or accidents shall be reported immediately to the supervisor.

4) Moving equipment shall not be operated unless the operator has been instructed and properly trained in its use.

5) Speed limits, traffic signs, “clean/dirty” road designations and parking regulations must be observed within the Midnite Mine Site and in travel to and from the Site on public roads.

6) Safety devices and safety guards must be in place before operating any equipment.

7) Hand tools and special tools must be kept clean and in good repair.

8) The correct tool must be used for the particular job in the proper manner.

9) Proper protective equipment must be used for particular job conditions.

10) Loose clothing must not be worn as it may be caught in moving equipment causing injury. Long hair must be bound to prevent entanglement with equipment.

11) Good housekeeping must be practiced at all times.

12) The rules of personal hygiene shall be observed to avoid infection and contamination with toxic chemicals and radioactive material.

13) Practical jokes, rowdiness, and “horseplay” are strictly forbidden.

14) Reporting to the work site under the influence of alcohol or drugs, or bringing them on the premises, is forbidden.

15) Under no circumstances shall safety be sacrificed.

16) No job shall be considered finished until the safety of the next person to use the equipment has been assured.

17) All site radiation safety procedures and work rules must be followed.

18) Failure to adhere to safety and health procedures and rules can result in removal from the site.

19) All site personnel have the authority and responsibility to suspend field activities if the health and safety of personnel become endangered.

## L2.0 GENERAL HEALTH AND SAFETY REQUIREMENTS

Personal protective equipment (PPE) is used to shield, isolate or otherwise protect individuals from chemical or physical hazards that may be encountered while performing work at and in the vicinity of the Site. Level D PPE as specified in Section L2.6 is anticipated for most Site activities unless an upgrade is needed based on air sampling/monitoring results.

The primary respiratory concern is airborne dust generated during earth-moving operations. Should airborne dust levels be visible, engineering controls (e.g., watering) shall be promptly implemented to reduce dust concentrations. Engineering and administrative controls will be instituted as needed to correct workplace conditions. However, the Company Site Safety Manager, Company Radiation Safety Officer~~SSO, PSO~~, or Contractor Site Safety Officer may~~RSO/RST may at their discretion and judgment~~ require respiratory protection in accordance with all necessary safety and health precautions or requirements providing a respirator protection plan is in place and the individual(s) has been properly trained, medically cleared, and fit tested.

It is anticipated that activities related to the RA construction will ~~not~~ require provisions~~restrictions~~ to be as low as reasonably achievable as to~~reduce~~ radiation doses. However, monitoring of workers will be performed as described in the RPP (Attachment L-1). In the event that monitoring results indicate a need for reducing doses, engineering controls or PPE requirements will be instituted.

## L2.1 SITE SAFETY MEETINGS

All field personnel shall attend a Site orientation meeting before commencing field work. This meeting shall be scheduled and conducted by the Company Site Safety Manager~~SSO, PSO,~~ or Contractor Site Safety Officer~~their designee~~ depending on the nature of work or the personnel involved. The requirements of this HASP will be reviewed at this meeting, and discussion will include at least the following:

- Contaminants and exposure pathways of concern
- Physical hazards
- Radiation hazards
- Task specific procedures
- PPE
- Air monitoring procedures
- Decontamination requirements and procedures
- Emergency procedures
- Evacuation routes

At the close of the meeting, all field employees shall sign a safety compliance form stating that they have read and understand this HASP and agree to comply with its provisions. A copy of the compliance form is presented in Attachment L-3.

Subsequent safety meetings will be conducted on regular basis at the beginning of a shift and may be task specific. The Company Site Safety Manager~~SSO~~ or Contractor Site Safety Officer~~PSO~~ will determine when work procedures have changed and when additional meetings are necessary to introduce further safety requirements.

## L2.2 ACCIDENT/INCIDENT REPORTING

If an accident or incident results in physical injury, illness, chemical exposure or property damage, the CQAO, Company Site Safety Manager, Contractor Site Safety Officer~~CS, PSO~~ and/or Contractor Superintendent~~SSO~~ shall report the incident in writing to the Company Construction Manager. The Company Construction Manager will convey the accident/illness information to the Supervising Contractor for inclusion in the Weekly Construction Report to

EPA.~~SOM and SGM.~~ Emergency response is discussed in Section L2.9. Near-miss, personal injury, or property damage incidents shall be reported to Site safety personnel.

## L2.3 PROHIBITED ACTIVITIES

Personnel shall not do the following:

- Work alone on the Site with power equipment
- Smoke, eat, drink, or chew gum or tobacco on the Site except in designated areas

Utilizing the buddy system during activities involving power equipment will permit personnel to attend to coworkers or seek assistance should an accident or other emergency situation arise. The buddy system will also reduce the likelihood of accidents as coworkers observe each other performing work activities. Smoking, eating, drinking, or chewing gum or tobacco increases the risk of ingestion of Site contaminants.

Potable drinking water supplies will be supplied and maintained for workers. No employee shall perform work in any area where hazardous conditions exist that could endanger the employee's safety unless visual and/or verbal contact is maintained. At the discretion of the Company Site Safety Manager~~SSO~~ or Contractor Site Safety Officer~~PSO~~, the buddy system may be waived for low hazard tasks.

## L2.4 VISITOR CLEARANCE

Due to potential hazards presented at the Site, the Company will, to the extent it is able,~~;~~ exclude all persons other than those associated with the Company and its Contractors/Subcontractors from the Site, unless authorized by Company management personnel and accompanied by a Company representative or other authorized person. The Company will deny entry~~authorization~~ to those persons who do not meet the training requirements of Section L2.10 of this HASP.

Any non-authorized person observed on the Site by a Company representative or other authorized person will be 1) informed that there are potential hazards at the Site, 2) asked to leave the Site, and 3) told to contact the Company Site Construction Manager~~SSO~~ for further information regarding access to the Site.

## L2.5 MEDICAL SURVEILLANCE

Medical surveillance related to potential radionuclide exposures are addressed in the RPP (Attachment L-1).

Personnel assigned to work in the Site Exclusion Zone, where ~~which~~ personal air monitoring/sampling will be~~has been~~ conducted to identify~~identifying~~ workplace contaminates~~contaminate~~ above contaminant-specific ~~a contaminate~~ Permissible Exposure Limits,~~Limit~~ shall be protected~~protect~~ through the use of engineering controls, administrative controls, and respiratory protection. All respiratory protection will be conducted in accordance and compliance with a Respirator Protection Plan.~~,~~ Site personnel shall be medically cleared to conduct Hazardous Waste Operations and Emergency Response (HAZWOPER) remediation activities in accordance with OSHA 29 CFR 1910.120/29CFR1926.65. Fit~~-~~for~~-~~Duty paperwork documenting these medical surveillance requirements shall be maintained on-Site for all personnel assigned to work in the Exclusion Zone. Medical surveillance shall be current within the previous 12-24 months.

OSHA regulates medical surveillance/monitoring for specific compounds in several substance specific standards:

- Lead (29 CFR 1910.1025/1926.62)
- Cadmium (29 CFR 1910.1027/1926.1127)
- Arsenic (29 CFR 1910.1018)

Periodic air monitoring/sampling for potential health contaminates such as lead, cadmium, and arsenic will be conducted in order to be certain the OSHA Action Levels triggering specific medical surveillance for these compounds are not exceeded. Detailed discussions of chemical hazards, Site action levels, and air monitoring procedures are presented in Sections L3.3 and L3.9, respectively.

Contractors and their subcontractors may also have task-specific medical surveillance requirements (e.g. medical surveillance related to crane operators). All CSHPs shall detail all medical surveillance necessary to protect their workers and comply with OSHA regulatory requirements.

## L2.6 GENERAL PERSONAL PROTECTIVE EQUIPMENT

### L2.6.1 Levels of PPE

This section outlines the PPE protection levels described in OSHA 29CFR1910.120 Appendix B. It is anticipated that RA activities will require Level D PPE as described below. The recommended PPE for specific RA tasks will be identified the SOPs and JSAs included in the CSHP (see~~in~~ Section L1.4).~~2.6.1.~~ Provisions for Level C PPE are included below in the

event they are deemed necessary by the Company Site Safety Manager, Company Radiation Safety Officer~~SSO, RSO~~, or Contractor Site Safety Officer.~~PSO.~~ If Level C PPE is deemed necessary, this HASP will be modified to reflect both the increased risk and the need for greater personal protection, exposure monitoring, decontamination procedures, and medical surveillance.

### Level C

Level C PPE will be required when an action level for upgrade from Level D is met or exceeded and/or specific concentrations of airborne contaminants meet or exceed their respective OSHA permissible exposure limits (PELs) or the American Conference of Governmental Industrial Hygienists threshold limit values (ACGIH TLV's).

The following constitute Level C equipment

- Positive or negative pressure full-face or half-mask air purifying respiratory protection approved by National Institute for Occupational Safety and Health (NIOSH)
- Gloves, outer, chemical-resistant
- Gloves, inner, chemical-resistant
- Hooded chemical-resistant clothing (overalls; two-piece chemical-splash suit; disposable chemical-resistant overalls)
- Boots, outer, chemical-resistant steel toe and shank
- Boot-covers, outer, chemical-resistant (disposable (optional, depends on activity)
- Hard hat (optional, may be required for some activities)
- Face shield (optional depending on activity)
- High-visibility traffic vest (depending on hazards)

### Level D

Level D PPE includes work attire affording minimal protection: used for nuisance contamination only.

The following constitute Level D equipment:

- Coveralls (in areas where required by the RPP) or durable pants and long or short-sleeved shirt (no tank tops)

- Gloves (depends on activity and as directed by relevant SOPs/JSAs)
- Boots/shoes, chemical-resistant steel toe and shank, if necessary
- Safety glasses or chemical splash goggles (depends on activity and as directed by relevant SOPs/JSAs)
- Hard hat (depends on activity and as directed by relevant SOPs/JSAs)
- Face shield (depends on activity and as directed by relevant SOPs/JSAs)
- High-visibility traffic vest (depending on hazards)

### L2.6.2 Respiratory Protection

Contractors and their subcontractors performing or working near dust-generating activities in the Exclusion Zone shall have a written respirator program that meets or exceeds the requirements of 29 CFR 1910.134. This includes but is not limited to medical clearance, respirator training, respirator fit testing, respirator care and maintenance, etc. Respirator use may not be necessary for most Site operations, but Exclusion Zone personnel need to be trained and ready to upgrade to Level C PPE or stop work in the event an OSHA PEL or ACGIH TLV is met or exceeded. Site ~~Permissible Exposure Levels (~~PELs~~)~~ and Action Levels are presented and discussed further in Section L3.3.

Some Site personnel may require a respiratory protection program depending on their work activities. For example, some activities (e.g. welding or cutting, work with possible asbestos-containing materials) may require respiratory protection independent of any unique site-related hazards. Asbestos may be present in individual historic buildings on the Site. Asbestos shall only be sampled or removed by certified, trained, qualified personnel in accordance with Washington State asbestos requirements. If asbestos is confirmed, signs shall be posted and unauthorized persons shall be restricted from the area. If asbestos removal is necessary these actions will be included as part of the CSHP with Company oversight personnel directing contractor/subcontractor work from outside the designated asbestos exclusion zone.

If monitoring indicates a need for respiratory protection due to airborne dusts, the selection of respirators, as well as any decisions regarding upgrading or downgrading of respiratory protection, will be made by a certified industrial hygienist or other qualified professional. Based on the anticipated loading, contaminant properties, and the respirator/cartridge selected, a filter change-out schedule will be developed.

### L2.6.3 PPE Policies

PPE shall be provided, used, and maintained in a sanitary and reliable condition wherever actual or potential hazards cannot be eliminated through the use of engineering controls or safe work practices. Users of PPE shall inspect the equipment prior to use and after any occurrence that could affect the integrity of the equipment. Damaged PPE shall be discarded and not used. Users shall not modify, tamper with, or repair PPE beyond routine maintenance.

## L2.7 PERSONAL HYGIENE

Designated shower and laundry facilities will be provided as support for site remediation to provide personal hygiene~~. As these facilities are designed~~ and ~~completed, procedures will be developed as part of the controls~~ to limit movement of contaminants from the site. The Contractor/Subcontractor will review the shower/laundry facility design and include appropriate shower/laundry procedures in the CSHP.

## L2.8 DECONTAMINATION

Decontamination facilities will be established in the Construction Support Zone (CSZ) for people and equipment adjacent to the Exclusion Zone (see Figure L-1). ~~The specific decontamination steps will be detailed in JSAs and shall be designed to remove both trace metal and radioactive contamination.~~ Decontamination procedures are included in RPP-SOP06 – Decontamination Procedures, which is included in the RPP. The procedures described in RPP-SOP06 are applicable to both trace metal and radiation constituents. The general decontamination approach shall include the following:

- Wet methods to remove visual contamination from equipment, boots, outer gloves, etc.
- Removal of outer boots, gloves, coveralls, etc.
- Wash face and hands with soap and water
- Radiological scan of personnel and equipment (see RPP-SOP06)

Decontamination of equipment, such as light (pick-up trucks) and earth-moving (mine) equipment, shall take place at the Equipment Decontamination Facility. Physical contamination with mine dust and debris is the primary concern. It is anticipated that decontamination will be performed with water (e.g., pressure washing) and wastewater will be treated at the WTP.

Decontamination of personnel shall be conducted at the Personnel Decontamination Facility adjacent to the Exclusion Zone. These facilities shall include a clean side and a dirty side. Personnel shall enter the facilities at the beginning of the work shift on the clean side and don the required Site attire. They shall then enter the dirty side for their necessary PPE (hard hats, work boots, etc.) and enter the Exclusion Zone to begin the day's work. Upon exit from the Exclusion Zone, the procedure shall be reversed and personnel shall follow each step of the SOP/JSA in removing contaminated clothing and PPE. Full body showers may be required if radiation testing is elevated.

The Exclusion Zone footprint will change and become smaller as RA activities progress on-Site. When these changes take place a new Exclusion Zone map will be created and displayed on-Site. Workers on-Site will be made aware of any Exclusion Zone area changes. Figure L-1 presents the location of the Decontamination Facility and Exclusion Zone footprint at the start of the RA.

## L2.9 EMERGENCY RESPONSE

Local emergency response agencies will be informed of the project by the Company Site Construction Manager or his/her designated representative and provided the document titled *Midnite Mine Superfund Site Health and Safety Information for Emergency Responders* (MWH, 2012). The Company Site Construction Manager or his/her designated representative will coordinate with the local response agencies on a routine basis as established amongst the parties to provide project status updates, and to ensure that potential staff changes do not affect emergency preparedness.

### L2.9.1 Lines of Authority

At least one employee, either at the Site or on call at all times during project hours, will be available to respond to emergency situations. This Emergency Coordinator typically will be the Company Site Construction Manager, Company Site Safety Manager,~~SGM, SOM~~ or Company Radiation Safety Officer, or their qualified authorized representative, which~~SSO, and~~ has the responsibility of coordinating all emergency response measures, and will be thoroughly familiar with all aspects of this HASP, the location of all records, and the work area layout. The

Company Site Construction Manager, Company Site Safety Manager, or Company Radiation Safety Officer~~The SGM, SOM and SSO~~ contact information is included on Table L-1.

### L2.9.2 Emergency Information

The following list provides telephone numbers for external contacts (Table L-2). Internal contacts are listed on Table L-1. Both internal and external contacts will be posted in an area accessible to all employees:

**Table L-2 – External Contacts**

| Agency | Contact Information |
|---|---|
| Spokane Tribal Police Department & Ambulance | 911 or 509-258-4400 |
| Stevens County Sheriff Dispatch | 509-684-2555 |
| Washington Poison Control Center | 800-222-1222 |
| EPA Emergency Response Unit, Region 10 | 206-553-1200~~1263~~ |
| National Response Center | 800-424-8802 |
| RCRA, Superfund & EPCRA Hotline | 800-424-9346 |
| U.S. EPA Environmental Response Team | 732-321-6660 |

### L2.9.3 Evacuation Procedures

Due to the nature of the contaminants at the Site, chemical releases requiring evacuation are not anticipated~~ to occur~~. Therefore, evacuation routes have not been established. However, all evacuation procedures will be identified to all employees during the Site Orientation Meeting. Site personnel will be directed to immediately contact the Emergency Coordinator after reaching a safe location. The Company Site Safety Manager~~SSO~~ is responsible for updating personnel on any changes to entry and exit routes. Identified meeting places will be provided for each specific work area and a facility safety monitor will be assigned to each of the meeting places.

### L2.9.4 Emergency Medical Treatment

If any site personnel are~~is~~ injured, become~~becomes~~ ill or emergency medical treatment is needed, contact shall be made with the site safety and/or emergency services personnel on the Company radio or cellular phone and either site ambulance or other necessary emergency equipment and personnel will be dispatched, or necessary emergency services personnel in Wellpinit or Spokane ~~-~~will be notified, if appropriate. Should offsite emergency medical services be required provide the dispatcher with the following information:

Site location:

Midnite Mine (Midnite Mine East Road exits the pavement to the north between mile markers 16 and 17 on McCoy Lake Road (Ford Wellpinit Road). The road is marked with a sign – "MM East")

Spokane Tribe Reservation, Stevens County, Washington

Personnel~~Employees~~ may be transported to Sacred Heart Medical Center in Spokane or other facility if they develop signs or symptoms due to possible overexposure involving hazardous substances or health hazards. A map showing the route to the hospital from the Site is included in Attachment L-4 to this HASP. Symptoms of exposure and emergency medical treatment information are addressed in Safety Data Sheets (SDSs), formerly known as Material Safety Data Sheets (MSDSs), ~~now called Safety Data Sheets (SDSs),~~ that will be available to all workers at an appropriate location on the Site.

All accidents and injuries that occur at the Site will be reported to the Company Site Safety Manager or Contractor Site Safety Officer~~SSO/PSO~~ immediately (see Section L2.2).~~.~~ All injuries will be reported regardless of the apparent severity. Likewise, all possible overexposures will be reported even though adverse health effects or symptoms may not be initially apparent. An accident report form (Attachment L-3) will be completed for all accidents and injuries. Any equipment damage incidents exceeding $500 of damage will be reported.

### L2.9.5 Incident Investigation

The Company Site Safety Manager~~SSO~~ or Contractor Site Safety Officer~~PSO~~ will investigate all incidents, including near misses, to determine root cause and necessary corrective action to be taken to prevent like accidents from occurring. These written reports will be maintained in a project file and made available to authorized personnel. Additionally, each CSHP will include requirements to report incidents to the Company Site Safety Manager~~SSO~~ or Contractor Site Safety Officer~~PSO~~, and include provisions for proper OSHA recording and reporting.

### L2.9.6 First Aid

Various Company and Contractor/Subcontractor employees working on Site will have current CPR and first aid training and these employees will be identified as new tasks are initiated. First aid kits will be required at each active work area.

### L2.9.7 Spill Containment

The RA predominantly involves the movement of dry material (soils and mining wastes) within the Site boundaries; therefore, the potential for a major spill of a hazardous substance that

would present a risk to workers is low. While a spill containment program, as specified in 29CFR1910.120(j)(1)(viii), is not required for the planned RA earthworks activities, contractors using hazardous substances are required to maintain a spill containment program, and the spill containment procedures will be a component of their CSHP. Likewise, general spill containment procedures and protocols for the RA earthworks activities is~~will be~~ included in the Remedial Action Work Plan (RAWP).~~.~~

### L2.9.8 Communications

Communications will occur~~be made~~ via two-way~~portable~~ radios or cellular telephones equipped with receiver boosters. At a minimum, the RA Contractor will be required to provide reliable communication~~. In addition, telephone~~ services ~~will be available~~ on-Site ~~at Site offices~~.

## L2.10 TRAINING

### L2.10.1 Required Courses and Meetings

Employees engaged in field activities within the Exclusion Zone or Decontamination Areas must have successfully completed OSHA HAZWOPER initial training in compliance with 29 CFR 1910.120. Annual 8-~~-~~hour HAZWOPER refresher training shall be completed by each employee. Annual refresher training will be completed within 365 days of the last completed refresher training course. Site managers and supervisors shall successfully complete an 8-hour supervisor's course in addition to other training received. Attendance at the initial Site Safety Meeting and other as-needed Site Safety Meetings shall also be required of all personnel working on Site. Additional training such as radiation safety, excavation safety, confined space entry, work from heights, etc. will be required for specific persons or activities as may be required by SOPs/JSAs.

### L2.10.2 Worker Right to Know

As part of the training required under 29 CFR 1910.120 and the Hazard Communication (HAZCOM) standard in 29 CFR 1910.1200, workers shall be familiarized with MSDSs/SDSs and instructed on the terms and concepts that relate to MSDSs/SDSs. Contractors and subcontractors will provide the Company Site Safety Manager~~SSO~~ with a written HAZCOM plan together with all the MSDSs/SDSs for the hazardous products they are using. These plans will meet or exceed the requirements outlined in Company Right to Know Plan. As part of the Site Safety Meetings, the Company Site Safety Manager~~SSO~~ shall review hazardous materials that will be used and the precautions that will be taken when working with these materials. MSDSs/SDSs shall be kept in a binder at the Site for reference by workers.

### L2.10.3 Emergency Recognition

During the initial Site Orientation Meeting, all employees will be trained to recognize and respond to on-Site emergencies, and to anticipate and avoid hazards discussed in this HASP. Site Action Levels will be discussed during the Site Orientation Meeting so that personnel will understand air monitoring results and the level of hazards they represent.

### L2.10.4 Physical Hazards

Possible physical hazards will be identified and discussed at the Site Orientation Meeting by the Company Site Safety Manager~~SSO~~ or authorized Company representative. Potential hazards are discussed further in Sections~~Section~~ L3.4 and L.3.5.

### L2.10.5 Radiation Training

The radiation training requirements are described in Section 2.4 of the RPP (Attachment L-1).

## L2.11 RECORDS

The Company Site Safety Manager~~SSO~~ or Contractor Site Safety Officer~~PSO~~ shall be responsible for maintaining records relevant to the HASP. The records will be available at all times. A log book of the following information shall be kept:

- Daily work activities
- Air quality monitoring
- Make and model of equipment used
- Calibrations
- Maintenance
- Dates, time, and a list of attendees at safety meetings
- All incidents and accidents

Verification of compliance with applicable training programs will be maintained by the responsible contractor.

## L2.12 ADDENDA – MODIFYING THIS HASP AND CHANGE MANAGEMENT

Addenda to the HASP may be implemented based on newly acquired information or unforeseen situations which may arise. The addenda will state any changes, deletions, or additions to the HASP. Addenda shall be approved and signed by the Company Site Safety Manager~~SSO~~

before taking effect. All affected workers and contractors will be briefed on addenda content, associated risks, and protective measures.

# L3.0 SPECIFIC HEALTH AND SAFETY REQUIREMENTS

## L3.1 WORK ACTIVITIES

The work that will be conducted at and in the vicinity of the Site consists of construction and associated operations, maintenance, and monitoring. Work will include excavating or handling materials that may have elevated concentrations of trace metals and naturally occurring radionuclides. Work may be conducted in areas where trace metal or radiologically contaminated water is flowing or ponded.

Anticipated construction related-tasks include earthmoving equipment operation (excavation, loading, hauling, spreading, compacting, grading), HDPE liner and geotextile deployment, rock crushing and screening operations, electrical equipment operation, pipe installation, rock and gravel placement, loading and unloading trucks, mechanical and electrical equipment maintenance (i.e., welding, electrical, lubricant, etc.).

Planned RA activities include:

- Excavation of approximately 18 million cubic yards (CY) of mine wastes and mine-affected soils and sediments
- Consolidation of the excavated materials in the open pits
- Preparation of the open pits prior to waste consolidation, including scaling the pit walls to reduce rock-fall hazards
- Demolition of existing site facilities and buildings
- Construction of a new water treatment plant (WTP)
- Construction of temporary and permanent water storage impoundments
- Construction of temporary and permanent water conveyance pipelines and channels
- Operation and maintenance of constructed facilities
- Site-wide monitoring of soil, sediment, groundwater and surface water

## L3.2 APPLICATION OF STANDARDS

The work will entail activities that may be covered under OSHA General Industry Standards (29 CFR 1910), OSHA Construction Standards (29 CFR 1926), and/or NRC Standards. For consistent application of the most comprehensive or protective standard, the applied standard for work at the Site may be specified for specific activities, as set forth in the following subsections~~paragraphs of this section~~.

## L3.3 CHEMICAL HAZARDS

The Midnite Mine Remedial Investigation (RI) Report (EPA, 2005) contains sample data for trace metal content in Site surface materials and sediments. The trace metal content of surface materials and sediments is location dependent and exposure potential depends how and where work is conducted. Section L3.9 includes air monitoring procedures for trace metals during the RA. The trace metals determined present at the Site include: Aluminum, Antimony, Arsenic, Barium, Beryllium, Cadmium, Chromium, Cobalt, Copper, Lead, Manganese, Mercury, Nickel, Selenium, Silver, Thallium, Uranium, Vanadium, and Zinc. The toxicity and concentrations of these substances varies. Table L-3 summarizes the information. The greatest risk of exposure to these substances is from inhalation or ingestion of airborne dust that contains these substances.

**Table L-3 – Chemical and Toxicological Characteristics of Site Constituents (Metals)**

| Constituent | CAS[1] Number | OSHA PEL (TWA)[2] | IDLH[3] | Routes of Entry | Health Effects |
|---|---|---|---|---|---|
| Aluminium | 7429-90-5 | 15 mg/m$^3$ | Not Determined | Inhalation, contact | Irritation: eyes, skin, respiratory system |
| Antimony | 7440-36-0 | 0.5 mg/m$^3$ | 50 mg/m$^3$ | Inhalation, ingestion,skin and/or eye contact | Irritation eyes, skin, nose, throat, mouth; cough; dizziness; headache; nausea, vomiting, diarrhea; stomach cramps; insomnia; anorexia; unable to smell properly: Eyes, skin, respiratory system, cardiovascular system. |
| Arsenic | 7440-38-2 | AL = 0.005 mg/m$^3$ PEL = 0.010 mg/m$^3$ | 5 mg/m$^3$ | Inhalation, skin absorption, skin and/or eye contact, ingestion | Ulceration of nasal septum, dermatitis, gastrointestinal disturbances, peripheral neuropathy, resp irritation, hyperpigmentation of skin, [potential occupational carcinogen]: Liver, kidneys, skin, lungs, lymphatic system. |
| Barium | 10022-31-8 | 0.5 mg/m$^3$ | 50 mg/m$^3$ | Inhalation, ingestion, skin and/or eye contact | Irritation eyes, skin, upper respiratory system; skin burns; gastroenteritis; muscle spasm; slow pulse, extrasystoles; hypokalemia: eyes, skin, respiratory system, heart, central nervous system |
| Beryllium | 7440-41-7 | 0.002 mg/m$^3$ | 4 mg/m$^3$ | Inhalation, skin and/or eye contact | Berylliosis (chronic exposure): anorexia, weight loss, lassitude (weakness, exhaustion), chest pain, cough, clubbing of fingers, cyanosis, pulmonary insufficiency; irritation eyes; dermatitis; [potential occupational carcinogen]: eyes, skin, respiratory system. |
| Cadmium | 7440-43-9 | 0.005 mg/m$^3$ | carcinogen; (9 mg/m$^3$ [as Cd]) | Inhalation, absorption | Pulmonary edema, dyspnea (breathing difficulty), cough, chest tightness, substernal (occurring beneath the sternum) pain, headache, chills, muscle aches; nausea, vomiting, diarrhea; anosmia (loss of the sense of smell), emphysema, proteinuria, mild anemia, emphysema, chronic bronchitis, respiratory system, kidneys, prostrate, blood, prostatic & lung cancer |

**Table L-3 – Chemical and Toxicological Characteristics of Site Constituents (Metals), continued**

| Constituent | CAS[1] Number | OSHA PEL (TWA)[2] | IDLH[3] | Routes of Entry | Health Effects |
|---|---|---|---|---|---|
| Chromium | 7440-47-3 | 1.0 mg/m3 | 250 mg/m$^3$ (as Cr) | Inhalation, ingestion, contact | Irritation of the eyes or skin, and lung fibrosis |
| Cobalt | 7440-48-4 | 0.10 mg/m$^3$ | 20 mg/m$^3$ | Inhalation, ingestion, skin and/or eye contact | Cough, dyspnea (breathing difficulty), wheezing, decreased pulmonary function; weight loss; dermatitis; diffuse nodular fibrosis; resp hypersensitivity, asthma: Skin, respiratory system. |
| Copper | 7440-50-8 | 1.0 mg/m$^3$ | 100 mg/m$^3$ | Inhalation, ingestion, contact | Irritation of the eyes, nose, pharynx; nasal septum perforation; metallic taste; dermatitis |
| Lead | 7439-92-1 | AL = 0.03 mg/m- PEL = 0.05 mg/m$^3$ | 100 mg/m$^3$ | Inhalation, ingestion, contact | Lassitude (weakness, exhaustion), insomnia; facial pallor; anorexia, weight loss, malnutrition; constipation, abdominal pain, colic; anemia; gingival lead line; tremor; paralysis wrist, ankles; encephalopathy; kidney disease; irritation eyes; hypertension |
| Manganese | 7439-96-5 | 5 mg/m$^3$ (15-minute Ceiling) | 500 mg/m$^3$ | Inhalation, ingestion | Asthenia, insomnina, mental confusion, metal fume fever, dry throat, cough, chest tightness, dyspena, rales, flu-like fever, low back pain, vomitting, kidney damage |
| Mercury | 7439-97-6 | 0.1 mg/m$^3$ | 10 mg/m$^3$ | Inhalation, skin absorption, ingestion, skin and/or eye contact | Irritation eyes, skin; cough, chest pain, dyspnea (breathing difficulty), bronchitis, pneumonitis; tremor, insomnia, irritability, indecision, headache, lassitude (weakness, exhaustion); stomatitis, salivation; gastrointestinal disturbance, anorexia, weight loss; proteinuria: eyes, skin, respiratory system, central nervous system, kidneys. |
| Nickel | 7440-02-0 | 1.0 mg/m$^3$ | 10 mg/m$^3$ | Inhalation, ingestion, contact | Sensitization dermatitis, allergic asthma, and pneumonitis. Potential occupational carcinogen |
| Selenium | 7782-49-2 | 0.2 mg/m$^3$ | 1 mg/m$^3$ | Inhalation, ingestion, skin and/or eye contact | Irritation eyes, skin, nose, throat; visual disturbance; headache; chills, fever; dyspnea (breathing difficulty), bronchitis; metallic taste, garlic breath, gastrointestinal disturbance; dermatitis; eye, skin burns; in animals: anemia; liver necrosis, cirrhosis; kidney, spleen damage: eyes, skin, respiratory system, liver, kidneys, blood, spleen. |

**Table L-3 – Chemical and Toxicological Characteristics of Site Constituents (Metals), continued**

| Constituent | CAS[1] Number | OSHA PEL (TWA)[2] | IDLH[3] | Routes of Entry | Health Effects |
|---|---|---|---|---|---|
| Silver | 7440-22-4 | 0.01 mg/m3 | 10 mg/m3 | Inhalation, ingestion, skin and/or eye contact | Blue-gray eyes, nasal septum, throat, skin; irritation, ulceration skin; gastrointestinal disturbance: nasal septum, skin, eyes |
| Thallium | 7440-28-0 | 0.1 mg/m$^3$ | 15 mg/m$^3$ | Inhalation, skin absorption, ingestion, skin and/or eye contact | Nausea, diarrhea, abdominal pain, vomiting; ptosis, strabismus; peri neuritis, tremor; retrosternal (occurring behind the sternum) tightness, chest pain, pulmonary edema; convulsions, chorea, psychosis; liver, kidney damage; alopecia; paresthesia legs: eyes, respiratory system, central nervous system, liver, kidneys, gastrointestinal tract, body hair. |
| Uranium | 7440-61-1 | Sol = 0.05 mg/m$^3$ Insol = 0.25 mg/m$^3$ | 10 mg/m$^3$ (as U) | Inhalation, ingestion, skin and/or eye contact | Dermatitis; kidney damage; blood changes; [potential occupational carcinogen]; in animals: lung, lymph node damage; [potential occupational carcinogen] Potential for cancer is a result of alpha-emitting properties & radioactive decay products (e.g., radon): Skin, kidneys, bone marrow, lymphatic system. |
| Vanadium | 1314-62-1 | 0.5 mg/m$^3$ (Ceiling) respirable fraction | 35 mg/m$^3$ (as V) | Inhalation, ingestion, skin and/or eye contact | Irritation eyes, skin, throat; green tongue, metallic taste, eczema; cough; fine rales, wheezing, bronchitis, dyspnea (breathing difficulty): eyes, skin, respiratory system. |
| Zinc | 1314–13–2 | 15 mg/m$^3$ as zinc oxide dust | 500 mg/m$^3$ (as zinc oxide) | Inhalation, ingestion, contact | Coughing, substernal pain, upper respiratory tract irritation, rales, chills, nausea and vomiting. |

1 Chemical Abstract Number

2 Permissible exposure limit time-weighted average

3 IDLH = Immediately Dangerous to Life or Health

## L3.4 PHYSICAL HAZARDS

Physical hazards that may be present on this Site include:

### L3.4.1 Earthmoving Equipment Operation

Activities will include the use of earthmoving equipment (equipment). Personnel operating equipment will be trained in accordance with 29 CFR 1926 Subparts H, O, and W. As work plans are developed, SOPs/JSAs will be completed for all activities involving equipment and job-specific protective measures will be established. Certification records will be maintained for all site operators.

In general:

- Daily and routine equipment inspections must be performed by a competent, trained personnel prior to use. Inspections must be done in accordance with the manufacturer's recommendations.
- No one shall approach a moving piece of equipment without first obtaining eye contact and a positive signal to approach from the operator.
- Ground personnel shall wear a highly visible safety vest or equivalent type of attire and stay out of the swing radius of the moving equipment. Ask operator about blind spots, if unsure.
- Never stand beneath a suspended load.
- Backup alarms must be functional, whenever activated confirm no one is the backing path of the equipment.

### L3.4.2 Excavating and Trenching

Construction and RA activities will include excavation, which at times may be extensive. All Exclusion Zone personnel will keep back at least 2 feet from excavation/trench edge and will avoid movement between the excavation/trench and any equipment or spoils positioned within 10 feet of the excavation/trench. If work or entry into an excavation/trench greater than 3 feet in depth becomes necessary, entry will not be allowed until a relevant JSA is developed and affected employees are trained on safe work practices, egress methods, and emergency procedures by a competent person. If a contractor or subcontractor has work involving excavations/trenches, the work with be conducted in accordance with 29 CFR 1926~~29CFR1926~~

Subpart P and an excavation plan or JSA will be developed and followed that includes, but is not limited to:

- Designation of a competent person able to classify soils, identify hazards and develop soil stabilization methods and personal protective measures
- Utility clearance (both overhead and underground)
- Atmospheric assessment and any necessary protective measures
- Vehicle management/safety
- Highwall/sidewall stabilization method
- Equipment and spoils management
- Means and method of egress
- Elevated work requiring fall protection

In addition to highwalls associated with past mining activities, some work activities may involve work on elevated walking/working surfaces. All work, where a walking/working surface (horizontal and vertical surface) with an unprotected side or edge which is 6 feet (1.8 m) or more above a lower level, shall be protected from falling by the use of guardrail systems, safety net systems, or personal fall arrest systems. Workers will be informed on the existing systems as part of site orientation, and systems in place for specific areas/activities will be included in the relevant JSA(s). Any contractor or subcontractor who creates an elevated walking/working surface shall prevent exposure to the fall hazard for all other site personnel and protect their workers from fall as specified in 29 CFR 1926~~29CFR1926~~ Subpart M.

### L3.4.3 Confined Space

If work or entry into a confined space becomes necessary entry will not be allowed until a confined space entry program is in place, a relevant JSA is developed and affected employees are trained on safe work practices, egress methods, and emergency procedures by a competent person. Work involving confined spaces will be conducted in accordance with 29 CFR 1910~~29CFR1910~~.146 and the final entry permit issued by DMC/Newmont.

### L3.4.4 Ladders and Scaffolding

All ladders employed on site and their use will comply with 29 CFR 1926~~29CFR1926~~ Subpart X. SOPs/~~-~~JSAs for activities using portable ladders will include the requirement to inspect the ladder(s) prior to use. Contractors and subcontractors using scaffolds will have an SOP

detailing their proper erection, use, inspection, and disassembly. The competent person for scaffold erection, pre-shift inspection, and dismantling shall be designated in writing. JSAs for activities using scaffolds shall detail the safe work practices specific to the scaffold type and include the requirement for pre-shift/pre-use inspection.

### L3.4.5 Overhead and Highwall Hazards

RA construction activities will involve consolidating wastes in open pits that present rockfall hazards from exposed highwalls, particularly when working in Pit 3 and Pit 4. The Remedial Design (RD) used Colorado Rockfall Simulation Program (CRSP) modeling to incorporate rockfall mitigation measures into the planned construction activities. A specialty rockfall-mitigation contractor (Rock Solid Solutions) also performed a Site visit during October 2013 to assess the potential hazards associated with the planned RA construction activities and provided the following observations and recommendations:

- Rockfall is a hazard in Pits 3 and 4 at the Midnite Mine and can be very unpredictable. Analyses indicate that, once rockfall is initiated a significantly high percentage of rockfall will make it down to the remedial work areas in the pit bottom.
- Physical and hydraulic scaling of (and/or identification of) larger rockfall sources (larger than 3-feet in size) will be conducted prior to dewatering the pit lakes.
- Rockfall catch berm/ditch designs 10-feet deep and 15-feet wide horizontally will be used along with work sequencing as identified in the design will be used.
- A portable rockfall barrier will be used in areas where personnel need to work outside of construction equipment prior to construction of rockfall catch berms (i.e. sump drilling/blasting, sump excavation, drainage system construction, and liner placement) or in areas where rockfall catch berms cannot be constructed due to site space constraints.

All contractors working in the pits or near other exposed highwalls will identify relevant hazards and develop mitigation/injury prevention measures. The identified hazards and protective measures will be presented during site orientation. All personnel on site are required to follow demarcations, barricades, and signage that protect against highwall and rockfall hazards.

### L3.4.6 Power and Hand Tools

All hand and power tools and similar equipment shall be maintained in a safe condition. When power tools are designed with guards, they will be maintained with guards in place. Any electrical cord or pneumatic hose damaged during operation will be replaced as specified by the

manufacturer, damaged tools will be removed from service and tagged out for further use until all necessary repairs are made. Wherever power or hand tools are used, their safe use, care, and limitations will be addressed in relevant JSAs. All contractors using power and hand tools will integrate procedures and policies compliant with 29 CFR 1926~~29CFR1926~~ Subpart I into their CSHP and JSAs.

### L3.4.7 Electrical Hazards

All equipment used on the Site and methods of use, as well as all electrical wiring will comply with 29 CFR 1926~~29CFR1926~~ Subpart K. Only qualified personnel will access electrical switchboards and panelboards. Contractors and subcontractors using temporary switchboards and/or panelboards will provide methods for compliance with 29 CFR 1926~~29CFR1926~~.404 and 29 CFR 1926~~29CFR1926~~.405 as part of their HASP, and include provisions for routine inspections of the systems. All electrical service installations shall be assessed and appropriately managed for possible arc flash hazards.

### L3.4.8 Underground Utilities or Buried Materials

Ground disturbance (digging, drilling, excavation, etc.) outside the mine waste disturbance requires an~~a~~ underground utilities and buried materials clearance. Clearance processes must be included in both the work plan and the JSA, including the process to confirm completion prior to work start.

### L3.4.9 Overhead Power Lines

Overhead power lines may be present on the Site. Additionally, as work progresses the existence and locations of overhead power lines may change. For any work with vehicle/equipment over 8 feet in height and for any construction, the work plan and all supporting JSAs must include provisions for the identification, demarcation, and clearance of power lines as prescribed in 26 CFR 1926~~26CFR1926~~ Subparts L, N, and V.

### L3.4.10 Steep Slopes and Tripping Hazards

The Site is situated in mountainous and wooded terrain. Proper footwear and clothing will protect against minor abrasions (Level D PPE is required on site), but will not protect against slips, trips, or falls. Walking routes should be selected to avoid steep slopes. Work in remote and/or rugged terrain should not be conducted alone (refer to Section L2.3). Other potential slip, trip, fall hazards include slippery liners, temporary pipes located on the land surface, and ditches.

### L3.4.11 Fire and Explosion Hazards

The Site is located in a forested area and much of the RA construction will be conducted during the driest time of the year (summer and fall). As a result, the potential for fire is significant. Smoking is only allowed in designated areas. All construction equipment will be equipped with spark arrestors. Sources of fires include lightening, welding or cutting activities, hot vehicle components (e.g., exhaust pipe) contacting dry grass, and sparks caused by construction equipment striking rocks. All JSAs will include fire prevention and response actions if appropriate. Liquefied propane storage at the WTP and other fuel storage associated with the RAs present explosion hazards.

Site personnel should only attempt to extinguish small fires that do not present an immediate hazard. Small fires should be extinguished using fire extinguishers (which should be located in all site vehicles and construction equipment), dust suppression water, or by smothering with loose soil. All persons authorized to use fire extinguishers shall have documented training as required by OSHA 29 CFR 1910.157. The following procedures should be followed if a fire cannot be safely extinguished:

- Move flammable and combustible items out of the path of the fire.
- Immediately notify others to evacuate to a safe area.
- Call 911 or 509-258-4400 (Tribal Law Enforcement/Public Safety) first and then report the fire to the Company Site Safety Manager, Company Radiation Safety Officer, or Contractor Site Safety Officer~~SSO, RSO, or PSO~~.

In the event of an uncontrolled fire or wildfire, site personnel will evacuate to the designated assembly point (i.e., Construction Support Zone or other location established during a Safety Meeting) and follow the procedures outlined in the Contingency Plan included in the Remedial Action Work Plan. The Company Site Safety Manager~~SSO~~ or Company Radiation Safety Officer~~RSO~~ will notify the Spokane Tribe of Indians – Fire Management at 509-258-4566.

## L3.5 SLIPS, TRIPS, AND FALLS

Slips, trips and falls cause a high percentage of injuries and recordable accidents at construction and reclamation sites. Rocky, uneven, steep, and often wet terrain may be encountered during the removal project.

The risks of such accidents can be minimized by wearing proper footwear for the task and being aware of the physical conditions at the site. When walking from one location to another at a

removal site, the worker must check the footing, muddy or slick conditions, steep slopes, uneven surfaces, and other potential hazards.

## L3.6 VEHICLE AND EARTHMOVING EQUIPMENT SAFETY

Vehicles and earthmoving equipment will be present during RA activities. Safety requirements for specific tasks and types of equipment are described in JSAs and in Contractor/Subcontractor-specific health and safety plans. The following section describes general safety requirements for such equipment.

High temperature and equipment engines may create a fire hazard. All vehicles and construction equipment will be equipped with a fire extinguisher. Platforms, footwalks, steps, and ladders used for equipment access can present slipping and/or falling hazards. Anyone entering or climbing on equipment shall always maintain three points of contact.

Equipment backing up and swing loads pose serious hazard to ground personnel. All construction equipment shall have functional back-up alarms. Eye contact must be made with the operator before approaching moving equipment. The operator must stop the equipment and lower the bucket or other attachment before the worker approaches to reduce the potential hazard. Site personnel not directly involved with the work activity and observers must remain outside the swing radius of the operating equipment. Care must be taken wherever maintenance takes place to be sure that the equipment is braked and locked so that it cannot be accidentally moved or operated.

All site vehicles and equipment shall be properly chocked when parked and left unattended.

Hard hats and steel-toed boots are required in areas where earthmoving and construction equipment is in operation.

Equipment working in RA area will follow MSHA vehicle general rules. These rules include:

- Use the honking system for moving vehicles and equipment
    - 1 honk - starting engine
    - 2 honks - moving forward
    - 3 honks – moving reverse
- Chock wheels at all times that the vehicle is unattended
- Use of high visibility flags on all motor vehicles

## L3.7 EXTREME TEMPERATURES AND ADVERSE WEATHER CONDITIONS

Extreme temperatures and adverse weather conditions are most likely to be a concern during RA construction activities. However, such conditions could impact routine plant operations in the summer and winter.

### L3.7.1 Cold Stress

This section describes situations where cold stress is likely to occur and discusses procedures for the prevention and treatment of cold-related injuries and illnesses. Cold conditions may present health risks to employees during field activities. The three primary factors that influence the risk potential for cold stress are moisture, temperature and wind velocity. Other factors that increase susceptibility to cold stress, include age (very young or old), smoking, alcohol consumption, fatigue, and wet clothing. Hypothermia can occur at temperatures above freezing if the individual has on wet or damp clothing or is immersed in cold water. The combined effect of temperature and wind can be evaluated using a wind chill index as shown in Table L-4.

Bare flesh and body extremities that have high surface area-to-volume ratios such as fingers, toes and ears are most susceptible to wind chill or extremely low ambient temperatures. Because cold stress can create the potential for serious injury or death, employees must be familiar with the signs and symptoms and various treatments for each form of cold stress. Table L-5 provides information on frostbite and hypothermia, the two most common forms of cold-related injuries.

## Table L-4 – Cooling Power of Wind on Exposed Flesh Expressed as an Equivalent Temperature

| Estimated Wind Speed (in mph) | Actual Temperature Reading (°F) | | | | | | | | | | | |
|---|---|---|---|---|---|---|---|---|---|---|---|---|
| | 50 | 40 | 30 | 20 | 10 | 0 | -10 | -20 | -30 | -40 | -50 | -60 |
| | Equivalent Chill Temperature (°F) | | | | | | | | | | | |
| Calm | 50 | 40 | 30 | 20 | 10 | 0 | -10 | -20 | -30 | -40 | -50 | -60 |
| 5 | 48 | 37 | 27 | 16 | 6 | -5 | -15 | -26 | -36 | -47 | -57 | -68 |
| 10 | 40 | 28 | 16 | 4 | -9 | -24 | -33 | -46 | -58 | -70 | -83 | -95 |
| 15 | 36 | 22 | 9 | -5 | -18 | -32 | -45 | -58 | -72 | -85 | -99 | -112 |
| 20 | 32 | 18 | 4 | -10 | -25 | -39 | -53 | -67 | -82 | -96 | -110 | -121 |
| 25 | 30 | 16 | 0 | -15 | -29 | -44 | -59 | -74 | -88 | -104 | -118 | -133 |
| 30 | 28 | 13 | -2 | -18 | -33 | -48 | -63 | -79 | -94 | -109 | -125 | -140 |
| 35 | 27 | 11 | -4 | -20 | -35 | -51 | -67 | -82 | -98 | -113 | -129 | -145 |
| 40 | 26 | 10 | -6 | -21 | -37 | -53 | -69 | -85 | -100 | -116 | -132 | -148 |
| (Wind speeds greater than 40 mph have little additional effect). | LITTLE DANGER in less than 1 hour with dry skin; maximum danger from false sense of security | | | | INCREASING DANGER from freezing of exposed flesh within 1 minute | | | GREAT DANGER that flesh may freeze within 30 seconds | | | | |

Source: Modified from American Conference of Governmental Industrial Hygienists. 1997. "Threshold Limit Values for Chemical Substances and Physical Agents."

**Table L-5 – Cold Stress Conditions**

| Condition | Causes | Signs and Symptoms | Treatment |
|---|---|---|---|
| Frostbite | Freezing of body tissue, usually the nose, ears, chin, cheeks, fingers, or toes | Pain in affected area that later goes away<br>Area feels cold and numb<br>Incipient frostbite (frostnip) – skin is blanched or whitened and feels hard on the surface<br>Moderate frostbite – large blisters<br>Deep frostbite – tissues are cold, pale and hard | Move affected worker to a warm area<br>Immerse affected body part in warm (100 to 105 °F) water – not hot!<br>Handle affected area gently; do not rub<br>After warming, bandage loosely and seek immediate medical treatment |
| Hypothermia | Exposure to freezing or rapidly dropping temperatures | Shivering, dizziness, numbness, weakness, impaired judgment, and impaired vision<br>Apathy, listlessness, or sleepiness<br>Loss of consciousness<br>Decreased pulse and breathing rates<br>Death | Immediately move affected person to warm area<br>Remove all wet clothing and redress with loose, dry clothes<br>Provide warm, sweet drinks or soup (only if conscious)<br>Seek immediate medical treatment |

When working in cold environments, specific steps should be taken to lessen the chances of cold-related injuries. These include the following:

- Protecting exposed skin surfaces with appropriate clothing (such as face masks, hand wear, and footwear) that insulates, stays dry, and blocks wind.
- Shielding the work area with windbreaks to reduce the cooling effects of the wind.
- Providing equipment for keeping workers' hands warm by including warm air jets and radiant heaters in addition to insulated gloves.
- Using adequate insulating clothing to maintain a body core temperature of above 36 °C/96.8 °F.
- Providing extra insulating clothing on site.
- Reducing the duration of exposure to cold.
- Changing wet or damp clothing as soon as possible.

### L3.7.2 Heat Stress

This section describes situations where heat stress is likely to occur and provides procedures for the prevention and treatment of heat-related injuries and illnesses. Wearing PPE, especially during warm weather, puts employees at considerable risk of developing heat-related illness.

Health effects from heat stress may range from transient heat fatigue or rashes to serious illness or death.

Many factors contribute to heat stress, including PPE, ambient temperature and humidity, workload, and the physical condition of the employee, as well as predisposing medical conditions. However, the primary factors are elevated ambient temperatures in combination with fluid loss. Because heat stress is one of the more common health concerns that may be encountered during field activities, employees must be familiar with the signs, symptoms, and various treatment methods of each form of heat stress. Heat stroke is the most serious heat-related illness – it is a threat to life and has a 20 percent mortality rate. Direct exposure to sun, poor air circulation, poor physical condition, and advanced age directly affect the tendency to heat stroke. Table L-6 lists the most serious heat conditions, their causes, signs and symptoms, and treatment.

**Table L-6 – Heat Stress Conditions**

| Condition | Causes | Signs and Symptoms | Treatment |
|---|---|---|---|
| Heat cramps | Fluid loss and electrolyte imbalance from dehydration | Painful muscle cramps, especially in legs and abdomen<br>Faintness<br>Profuse perspiration | Move affected worker to a cool location<br>Provide sips of liquid such as Gatorade®<br>Stretch cramped muscles<br>Transport affected worker to hospital if condition worsens |
| Heat Exhaustion | Blood transport to skin to dissipate excessive body heat, resulting in blood pooling in the skin with inadequate return to the heart | Weak pulse<br>Rapid and shallow breathing<br>General weakness<br>Pale, clammy skin<br>Profuse perspiration<br>Dizziness<br>Unconsciousness | Move affected worker to cool area<br>Remove as much clothing as possible<br>Provide sips of liquid such as Gatorade® (only if conscious)<br>Fan the person but do not overcool or chill<br>Treat for shock<br>Transport to hospital if condition worsens |
| Heat Stroke | Life threatening condition from profound disturbance of body's heat-regulating mechanism | Dry, hot and flushed skin<br>Constricted pupils<br>Early loss of consciousness<br>Rapid pulse<br>Deep breathing at first, and then shallow breathing<br>Muscle twitching leading to convulsions<br>Body temperature reaching 105 or 106 °F or higher | Immediately transport victim to medical plant<br>Move victim to cool area<br>Remove as much clothing as possible<br>Reduce body heat promptly by dousing with water or wrapping in wet cloth<br>Place ice packs under arms, around neck, at ankles, and wherever blood vessels are close to skin surface<br>Protect patient during convulsions |

When working in hot environments, specific steps should be taken to lessen the chances of heat-related illnesses. These include the following:

- Ensuring that all employees drink plenty of fluids (Gatorade® or its equivalent) – note eating and drinking should only occur in designated areas ~~as~~ (see Section L2.3)
- Ensuring that frequent breaks are scheduled so overheating does not occur
- Revising work schedules, when necessary, to take advantage of the cooler parts of the day

### L3.7.3 Adverse Weather Conditions

The primary concern with regard to adverse weather is electrical storms. The following are general procedures for avoiding lightning-related injuries:

- The Company Site Safety Manager and Contractor Site Safety Officer will monitor the daily weather forecast and communicate the chance of electrical storms during safety meetings (see Section L1.1.2).
- Outdoor work will~~must~~ be halted during electrical storms (i.e., when thunder is heard) and workers will seek shelter either in enclosed vehicles or Site buildings as appropriate. (Work will not resume until 30 minutes passes after the last time thunder is heard.)

When inside the building, additional safety precautions include:

- Keep as many walls as possible between you and the outside. Stay away from doors, windows, and fireplaces.
- Stay away from anything that will conduct electricity such as radiators, stoves, sinks, and metal pipes.
- Use battery operated appliances only. Avoid handling electrical appliances and regular telephones (cordless phones and cell phones do not increase the risk of a lightning strike).

If sheltering in an enclosed vehicle, additional safety precautions include:

- Do not park near trees or tall objects that could fall over during a storm.
- Roll up the windows and sit with your hands in your lap and wait out the storm.
- Don't touch any part of the metal frame or any wired device in the vehicle (including the steering wheel or plugged-in cell phone).

Be ~~Individuals working outdoors must be~~ aware of downed power lines that ~~changing weather conditions. Electrical storms~~ may be touching the vehicle~~occur suddenly and without much warning~~.

If unable to find shelter in a building or an enclosed vehicle:

- Stay away from single objects that are tall (trees, flagpoles or posts), water, and other objects that conduct electricity (tractors, metal fences, lawn mowers, golf clubs). Taking shelter in a stand of similarly sized trees is safer than taking shelter under a single tree.
- Take shelter in low-lying areas such as valleys or ditches, but watch for flooding.
- If with a group of people in the open, spread out several yards apart from one another.
- If caught in a level field far from shelter, crouch down on the balls of your feet immediately, with feet together, place your arms around your knees and bend forward. Be the smallest target possible, and at the same time, minimize your contact with the ground. Don't lie flat.

If someone has been struck by lightning:

- Lightning victims are safe to touch. Call for help and administer first aid.

## L3.8 BIOLOGICAL HAZARDS

Biological hazards are likely to be encountered during environmental sampling activities and occasionally during routine Site operations. Biological hazards include:

- Animals (rodents, coyotes, deer, etc.)
- Insects
- Snakes
- Poisonous plants
- Bacteria and viruses

### L3.8.1 Animals

Workers will be instructed to avoid approaching wild animals such as squirrels, bats, coyotes, bear, wolves, mountain lions, deer, elk, moose, etc. or unfamiliar domestic animals. Small mammals may carry rabies and other viruses. Animal bites must be reported to the Company Site Safety Manager~~SSO~~ or Contractor Site Safety Officer~~PSO~~ immediately. The Company Site

Safety Manager~~SSO~~ or Contractor Site Safety Officer~~PSO~~ will contact the Spokane Tribe of Indians – Department of Natural Resources if any large wildlife are seen on-Site. Workers should seek shelter in a nearby vehicle or building when potentially dangerous wildlife is observed (e.g., bear, mountain lion) and remain in a safe location until the wildlife have left the area.

### L3.8.2 Insects

Workers will wear insect repellant while in areas where insects are likely to be a problem. Any worker with a particular allergy to bee stings or other insect bites will be required to obtain instructions and proper medication from his or her personal physician and must make that condition known to the Site Company Site Safety Manager~~SSO~~.

Black widow spiders are prevalent at the Site. Workers need to be especially careful in turning over rocks. Black widow spiders tend to get into clothing, as a result the unwary person could be bitten. Workers should carefully check clothing and shoes before donning them and frequently during the work period to be sure there are no unwanted creatures clinging to them. All spider bites will be reported to the Company Site Safety Manager~~SSO~~ or Contractor Site Safety Officer~~PSO~~ immediately, and documented accordingly.

### L3.8.3 Snakes

Snake bites can occur when snakes are inadvertently disturbed when stepping on or near them or when turning over rocks. Workers will be instructed to look before placing their hands in an area where snakes may be present, e.g., rock crevices, and to be aware when walking through vegetated areas. Snake bites must be reported to the Company Site Safety Manager~~SSO~~ or Contractor Site Safety Officer~~PSO~~ immediately and medical evaluation obtained.

### L3.8.4 Poisonous Plants

Workers shall be aware of poisonous plants (e.g., poison ivy) that may be indigenous to the area where environmental sampling will take place. Long-sleeved shirts and long pants should be worn when sampling in areas where such plants have been observed or are known to be present. Ivy-wipes or similar products should be on-hand for on-Site exposures.

### L3.8.5 Bacteria and Viruses

Proper personal hygiene ~~as described in Section L1.5.6~~ will prevent most work-related infections. Care should be taken in structures where rodents may be or have been present. Rodent feces and urine may contain the hanta virus. The CSHP will include JSAs specific to

inspecting and demolishing existing Site~~If such~~ structures that may present hanta virus risks~~are to be entered and dust generated, the areas should be sprayed with a 10 percent Clorox® solution prior to work being performed~~.

## L3.9 AIR MONITORING REQUIREMENTS AND PROTECTIVE MEASURES

**Radiation/Radon Surveys.** Radiation/radon monitoring requirements are discussed in the RPP included in Attachment L-1.

**Airborne Particulate**. As described previously in Section L3.3, contaminants of concern at the Site include trace metals that have been detected in mine waste, ore stockpiles, and mine-affected sediments. Baseline workplace personal air monitoring will be conducted at the initiation of RA activities (i.e., Phase 1, Phase 2, Phase 3) to determine what trace metals present potential human health hazards with the particular work task being performed. These monitoring data will be used to screen and eliminate trace metal constituents which do not present potential human health hazards or risks. Periodic personal air monitoring will be conducted based on the baseline results and changing work-place conditions to evaluate compliance with the applicable regulatory or voluntary limits. These personal air monitoring concentrations will be compared with applicable OSHA Permissible Exposure Limits (PEL), OSHA Action Levels (AL), ACGIH Threshold Limit Values (TLV) or ACGIH Short-term Exposure Limits for the specific trace metal. Real-time dust monitoring will be routinely conducted to demonstrate compliance with OSHA and ACGIH total particulate limits. All baseline and periodic personal air monitoring and evaluation will be conducted by or under the supervision of a trained and certified industrial hygienist or health professional. This individual will determine what protective measures or administrative controls will be necessary while baseline personal air monitoring is being conducted.

### L3.9.1 Organic Vapors

Organic vapors other than those associated with vehicle fuels are not anticipated to be present at the Site. The CSHP SOPs/JSAs should consider monitoring air quality that may be unique to working in the pits (e.g., accumulation of organic vapors in the pit bottoms).

### L3.9.2 Flammable Vapors

Flammable vapors other than those associated with vehicle fuels are not anticipated to be present at the Site. The CSHP SOPs/JSAs should consider monitoring air quality that may be unique to working in the pits (e.g., accumulation of flammable vapors in the pit bottoms).

### L3.9.3 Equipment, Calibration, and Maintenance

The real-time dust monitors are portable, battery-operated units used for monitoring personal exposures. These units read instantaneous and average dust concentrations ranging from 0.01 to 100 mg/m$^3$. The units are factory calibrated and will be returned for factory calibration per the manufacturer's recommendation (typically semi-annually). The units will be zeroed prior to each use.

## L3.10 NOISE MONITORING REQUIREMENTS

Noise levels may exceed those levels that require hearing protection (85 dBA averaged over an 8 hour day). If noise levels approach or exceed this level for extended periods of time, hearing protection and noise monitoring may be required. Contractors and subcontractors will be responsible for providing hearing conservation programs for their employees.

## L3.11 ENGINEERING CONTROLS

Dust suppression techniques, primarily watering, ventilation or filtration, shall be used to the maximum extent practicable. Motorized equipment will have mufflers and noise suppression devices as required.

# L4.0 REFERENCES


MWH Americas, Inc. (MWH), 2012. Midnite Mine Superfund Site Health and Safety Information for Emergency Responders, Revision 1. Prepared for Dawn Mining Company and Newmont USA Limited. July 17.

U.S. Department of Health and Human Services (USDHHS), 1985. Occupational Safety and Health Guidance Manual for Hazardous Waste Site Activities. Publication No. 85-115. October.

U.S. Environmental Protection Agency (EPA), 2005. Midnite Mine Remedial Investigation Report. Prepared for the U.S. EPA by URS Corporation. September.

# Attachment L-1

# Radiation Protection Plan

# Midnite Mine Superfund Site – Radiation Protection Plan For Remedial Action

100 Percent Design
**REVISED JUNE 2015**

~~Revision 1~~
~~**May 15, 2014**~~

*Prepared for:*

**Dawn Mining Company**

*P.O. Box 250*
*Ford, Washington 99013*

And

**Newmont USA Limited**

*6363 S. Fiddler's Green Circle*
*Greenwood Village, Colorado 80111*

*Prepared by:*

Environmental Resources Group (ERG)
Albuquerque, NM

~~SENES Consultants~~
~~Englewood, Colorado~~

## APPROVALS

The Midnite Mine Radiation Protection Plan has been reviewed and approved by the following:

| Name | Title | Date |
|---|---|---|
| _____ | Company Site Construction~~General~~ Manager | _____ |
| _____ | Company Site Safety~~Operations~~ Manager | _____ |
| _____ | Company Radiation Safety Officer | _____ |

Changes to the Midnite Mine Radiation Protection Plan must be reviewed and approved by each above identified individual.

~~individuals...~~

# TABLE OF CONTENTS

**APPROVALS** ..... **I**

**1.0 INTRODUCTION** ..... **1**
- 1.1 Radionuclides of Concern ..... 3
- 1.2 Project Organization ..... 8
- 1.3 As Low as Reasonably Achievable (ALARA) Policy ..... 11
- 1.4 Applicable Standards ..... 11

**2.0 RADIATION PROTECTION PLAN** ..... **12**
- 2.1 Authorities and Responsibilities of Organizational Functions Important to Radiation Protection ..... 13
- 2.2 Worker Responsibility ..... 14
- 2.3 Standard Operating Procedures ..... 14
- 2.4 Minimum Training and Experience Requirements for Management Personnel ..... 14
- 2.5 Radiation Safety Training Program ..... 15

**3.0 REGULATORY STANDARDS AND GUIDES** ..... **16**
- 3.1 Worker Dose Limits ..... 16
- 3.2 Release of Equipment and Land for Uncontrolled Use ..... 17

**4.0 RADIATION SURVEYS** ..... **17**
- 4.1 External Exposure and Exposure Rate Monitoring ..... 17
- 4.2 Particulate Air Monitoring (For Long Lived Alpha Emitters - Uranium, Thorium, Radium) ..... 18
- 4.3 Radon and Progeny Monitoring ..... 18
- 4.4 Personal Contamination Surveys ..... 19
- 4.5 Equipment Contamination Surveys ..... 19
- 4.6 Instrument Calibration ..... 19

**5.0 RESPIRATORY PROTECTION PROGRAM** ..... **20**

**6.0 CONTROL OF RADIOACTIVE MATERIALS AND RADIATION EXPOSURE** ..... **20**

**7.0 SEALED SOURCES** ..... **21**

**8.0 FEMALE EMPLOYEES OF CHILD BEARING AGE AND PRENATAL RADIATION EXPOSURE** ..... **21**

**9.0 RADIATION PROTECTION WORK RULES – APPLICABLE TO ALL EMPLOYEES AND CONTRACTORS** ..... **21**

**10.0 PERSONAL PROTECTIVE EQUIPMENT** ..... **22**

**11.0 CONTAMINATION CONTROL** ..... **22**

**12.0 PERSONAL DOSIMETRY PROGRAMS** ..... **22**
- 12.1 Personal Dosimeters (Direct Radiation Exposure Monitoring) ..... 23
- 12.2 Declared Pregnant Workers (DPW) Dosimetry ..... 23

12.3 Bioassay ..... 23
12.4 Calculation of Total Effective Dose Equivalent (TEDE) ..... 24
**13.0 RADIATION WORK PERMIT (RWP) ..... 24**
**14.0 RECORDS ..... 24**
**15.0 BIBLIOGRAPHY ..... 24**

## LIST OF TABLES

Table 3-1: Surface Contamination Limits for Unrestricted Release ..... 17
Table B-1. Uranium-238 Decay Series ..... 3

## LIST OF FIGURES

Figure 1-1 Midnite Mine Site Layout ..... 2
Figure 1-2 The Uranium Series[1] ..... 5
Figure 1-3 Estimated radium-226 concentrations* ..... 7
Figure 1-4 Gamma exposure rates* ..... 8

## LIST OF ATTACHMENTS

Attachment A: Radiation Protection Plan Standard Operating Procedures
Attachment B: Toxicological Profile for Uranium and Uranium Decay Products
Attachment C: RAD7 Radon Detector User Manual

# 1.0 INTRODUCTION

This Radiation Protection Plan (RPP) describes the radiation safety requirements, training, and policies specific to the radiation hazards that may be encountered while performing Remedial Action (RA) activities at the Midnite Mine Superfund Site (Site) approximately 45 miles northwest of Spokane, Washington. This plan has been prepared on behalf of Dawn Mining Company (DMC) and Newmont USA Limited (Newmont), and is applicable to all DMC/Newmont employees, contractors, and subcontractors involved with RA construction activities and visitors. This plan is supported by the Standard Operating Procedures (SOPs) included in Attachment A that provide the detail for field implementation of the radiation protection program defined by this RPP. A separate RPP exists for work in the water treatment plant (WTP) and is not directly applicable for the RA, although there are some identical requirements and/or similar operational procedures described in both RPPs. Workers who have responsibilities in both the WTP and the RA will be provided the necessary training for both RPPs prior to beginning work in the specific area and will use the corresponding RPP for their work.

DMC/Newmont (hereafter referred to as Company) personnel, contractors and subcontractors, and all personnel engaged in RA construction activities at the Site shall comply with all provisions of the Midnite Mine Health and Safety Plan (RA HASP) and this RPP. A general layout of the Midnite Mine Site is presented in Figure 1-1.

**Figure 1-1 Midnite Mine Site Layout**

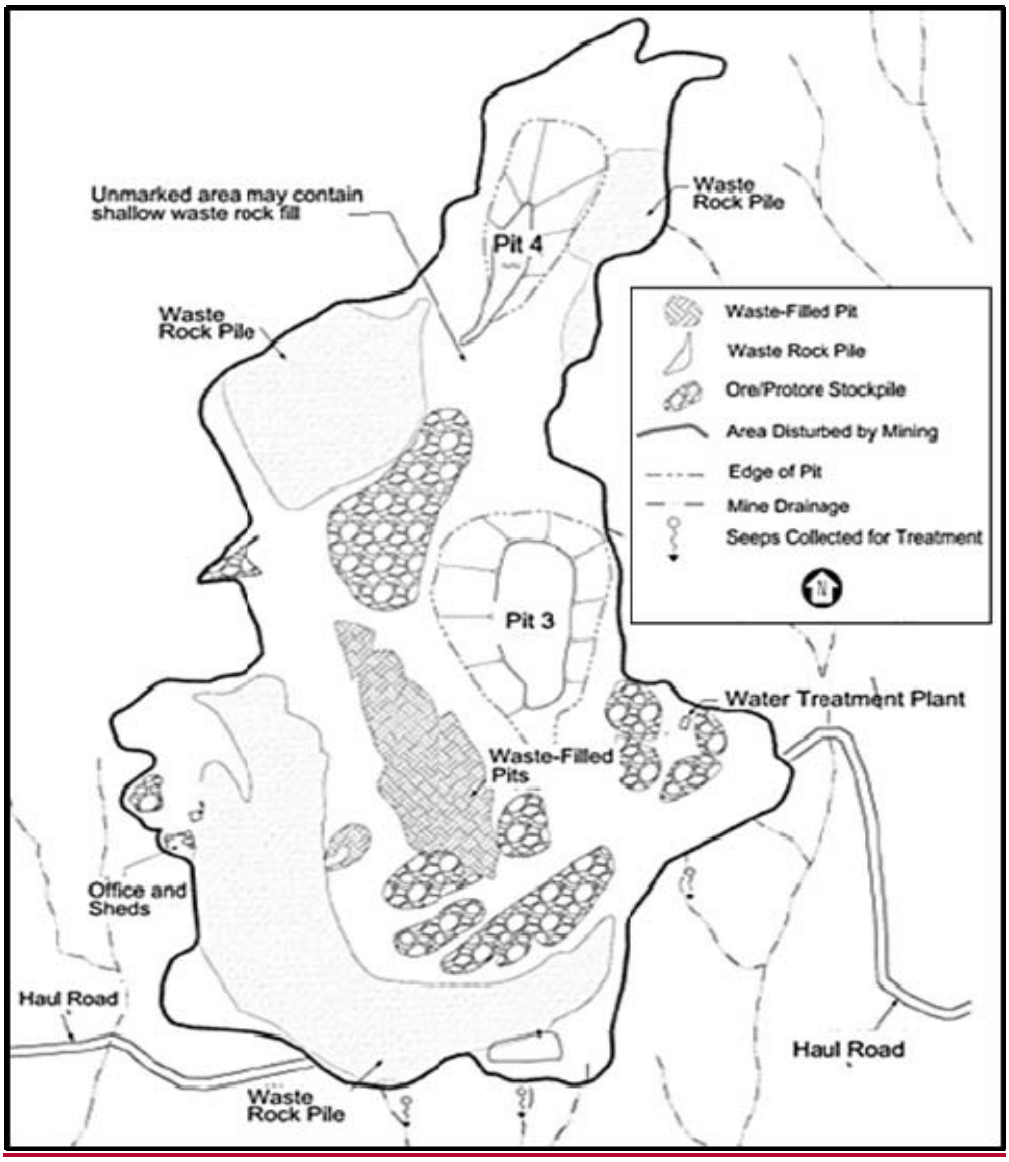

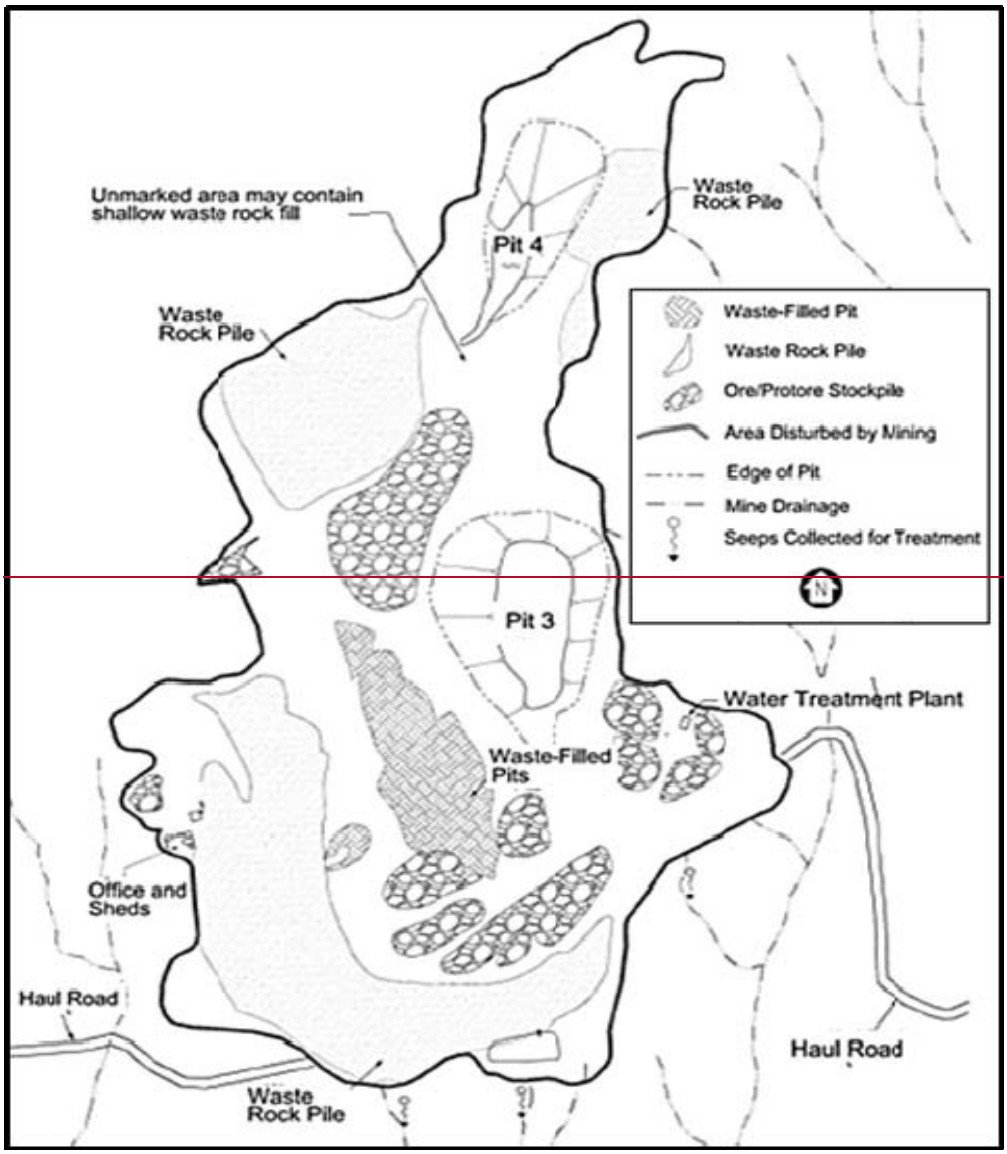


## 1.1 Radionuclides of Concern

The radionuclides of concern at the Midnite Mine are limited to uranium isotopes and their decay products. The uranium decay series is presented in Figure 1-2. The uranium decay series characteristics and additional information regarding the toxicological properties of uranium and its decay products are included in Attachment B to this RPP.

**~~Figure 1-2 The Uranium Series[1]~~**

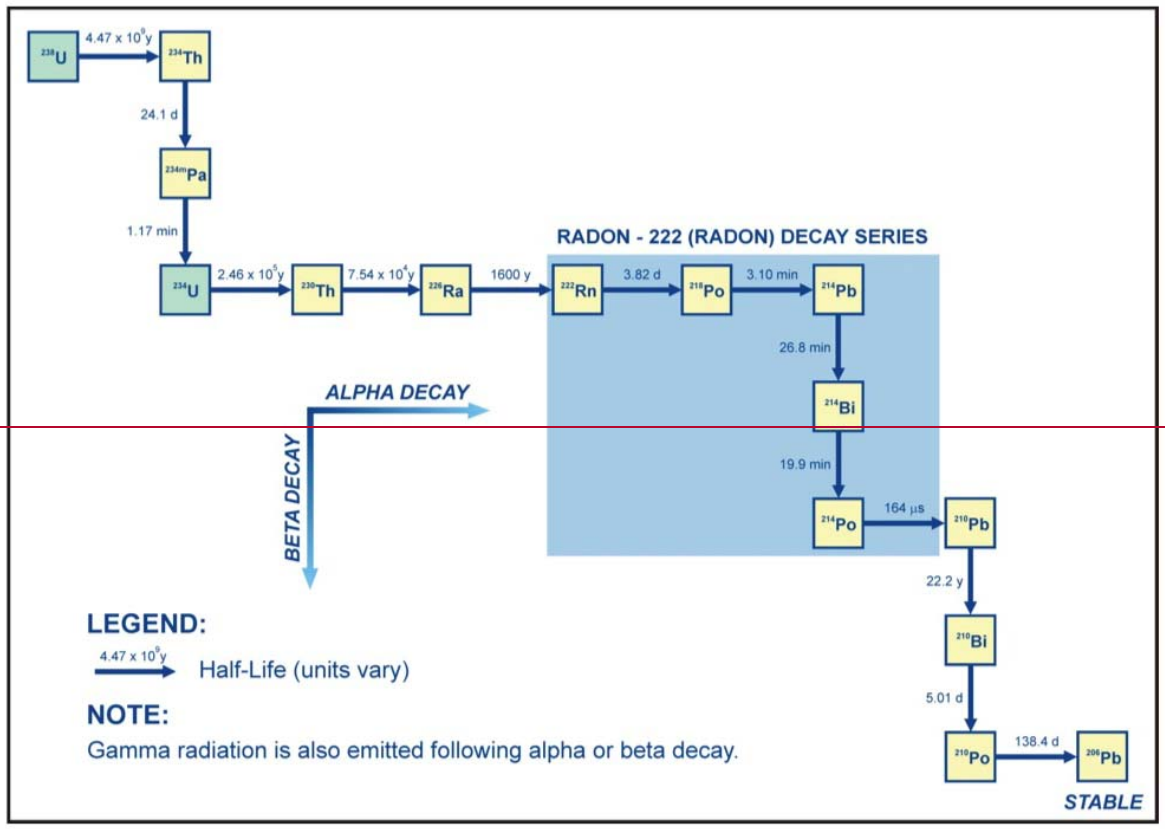


**Figure 1-2 The Uranium Series[1]**

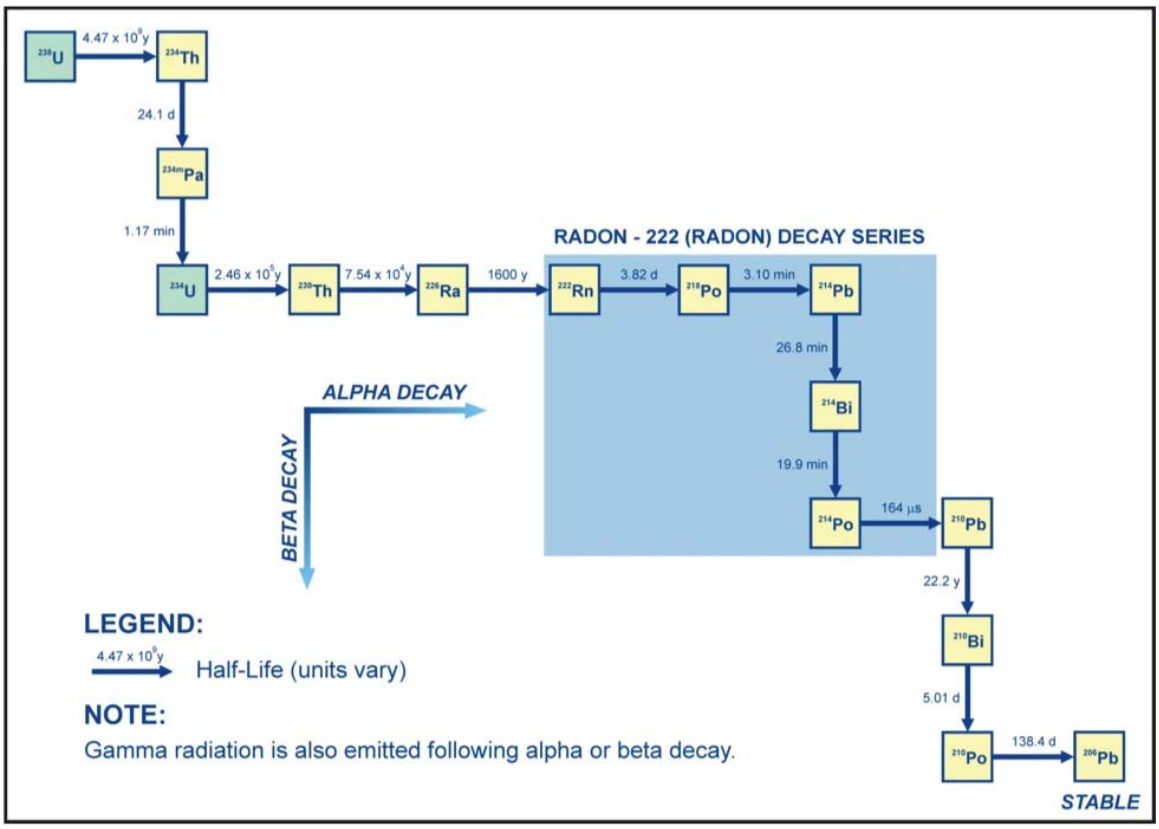


1 Figure 1-2 represents the Uranium decay series which represents > 97% of the radioactivity in natural uranium. The other naturally occurring uranium decay series, referred to as the "Actinium Series' begins with uranium 235 but this series is much less important for purposes of this project due to the very low percentage of uranium 235 in natural uranium (0.7%).

Where radiological protection is concerned, there are three different areas at the project, which have been identified as having varying levels of uranium and uranium progeny concentrations in the soil and ore/waste rock. A graded approach to personnel radiological monitoring will be used as is appropriate for the varying types of radiological hazards that may be encountered. The potential for such hazards will depend on the nature of the work being performed and the radiological composition of materials involved. Concentrations of uranium in the materials that will require removal, transport and ultimate consolidation in the engineered waste repositories is known to vary from less than 0.01% to as much as 2% by weight. However, the radiological constituent of greatest concern in terms of potential radiation doses to workers is the uranium decay product radium-226, and the primary worker dose pathway is external exposure associated with gamma radiation from several of the uranium and radium decay products. The estimated spatial distributions of ~~Ra-226 and associated~~ gamma exposure rates across the Site are shown in ~~Figures~~Figure 1-3~~ and 1-4.~~

Control and monitoring for internal exposure to dusts containing radioactivity resultant from general construction activities, material movement and associated potential for radioactive material contamination is also addressed by this RPP and associated Standard Operating

Procedures. However, these exposure pathways (inhalation / ingestion) are expected to be of secondary importance relative to external exposure associated with gamma radiation.

**Figure 1-3** Estimated radium-226 concentrations*

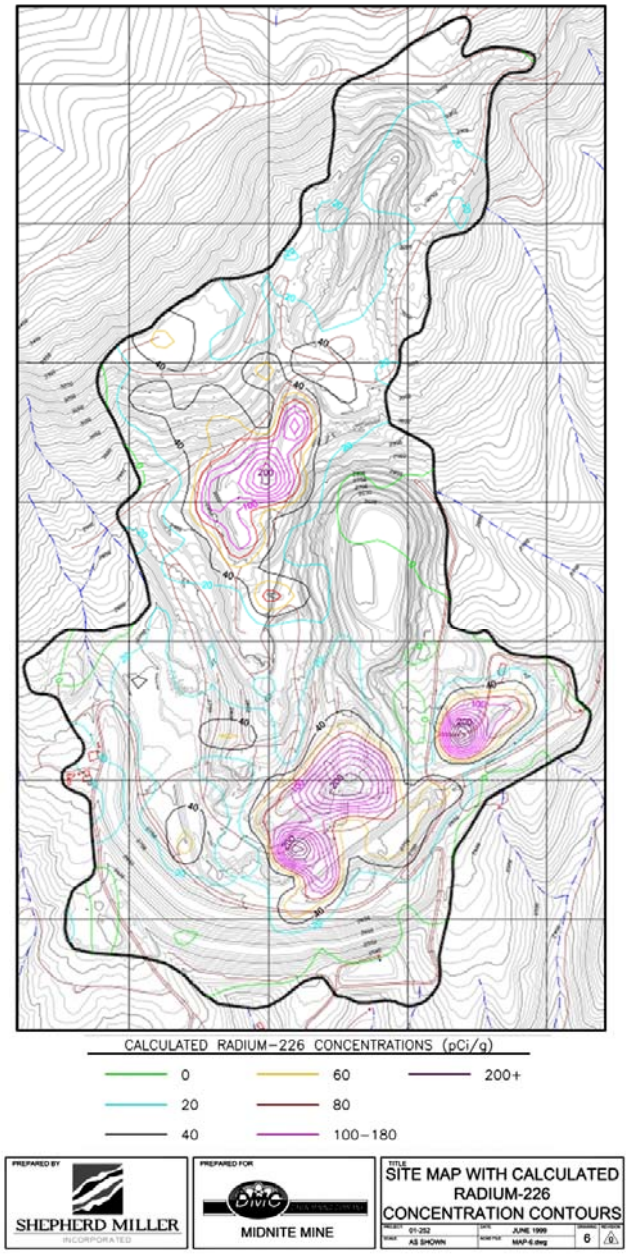


*Adapted from SMI, 1999

**Figure 1-4 Gamma exposure rates***

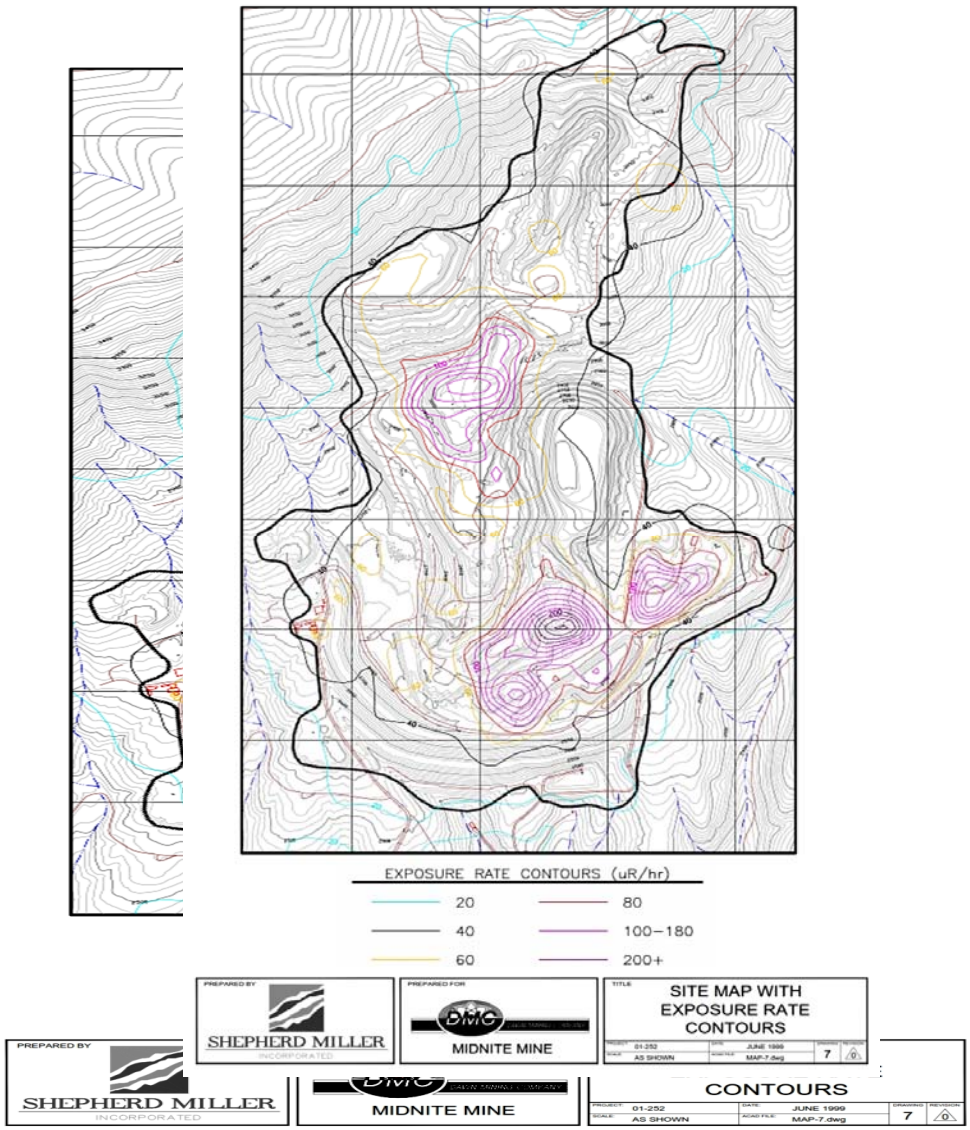


*Adapted from SMI, 1999

## 1.2 Project Organization

The roles and responsibilities for the key health and safety personnel are presented in Section 1.5 of the RA HASP. Additional information regarding the roles, responsibilities, and qualifications specific to the radiation protection organization (e.g., Company Radiation Safety Officer ~~(RSO)~~ and Company Radiation Safety Technician ~~(RST)~~ are summarized in this section (See also RPP -SOP1 ~~RPP-SOP-1~~ - *Responsibilities and Administrative Controls*, which provides detail on the roles and responsibilities and minimum qualifications of project organizational functions important to radiation protection. ~~Additionally, Section 2.1 of this RPP defines the general roles and responsibilities of other management functions as related to radiation protection.~~ The functions within the project organization with direct responsibility and

authority for execution of the Radiation Protection Program are discussed below and in Section 2.

The Company Site Construction~~General~~ Manager ~~(SGO)~~ is responsible for:

- Ensuring adequate resources are provided (personnel, equipment, etc.) for the compliant implementation of this RPP.
- Ensuring that the~~a~~ mine and RPP ALARA Policy is in place and is consistently administrated and applied ~~with site~~.
- Ensuring that mine ~~radiation~~ safety/health ~~radiation~~ performance objectives are maintained~~is conducted~~ in accordance to with the RPP.
- Ensuring adequate ~~mine~~ technical services ~~support~~ are available to support the RPP.

The Company Site Safety~~Operations~~ Manager ~~(SOM)~~ is responsible for:

- Ensuring that the ALARA Policy is communicated to all employees and that Radiation Protection Program policies are implemented.
- Ensuring that audit recommendations and responses are resolved and completed in a timely fashion.
- Suspending any and all Site operations, if necessary, to maintain safe conditions or ensure compliance with requirements of this RPP and applicable regulations.
- Approving all project Standard Operating Procedures and Quality Assurance documents to ensure consistency, safety, and overall efficiency of site operations and work flow.

The Company Radiation Safety Officer ~~(RSO)~~ is responsible for:

- Developing the project Radiation Protection Program, radiological training programs and evaluating compliance with radiation protection policies and ALARA principles.
- Participating in modification/design reviews for facilities and equipment that can affect potential radiation exposures.
- Developing plans, procedures, and methods for maintaining radiation exposures of Company personnel, contractors and visitors associated with ~~the Phase I RD/~~RA construction activities ALARA.
- Preparing and/or approving Radiation Work Permits on an as needed basis.
- Identifying locations, operations, and conditions that have the potential for causing exposures to radiation above limits.
- Reviewing, commenting on, and recommending changes in operational procedures to maintain occupational exposures ALARA.

- Performing and/or reviewing results of audits and approving audit responses and corrective actions as necessary.

- Overall generation, review, approval, technical verification, and implementation of Midnite Mine Radiation Standard Operating Procedures.

- Developing procedures for overall radiological health and safety.

- Maintaining records related to the RPP~~Radiation Safety Program~~ including~~ those related to~~ radiological monitoring and assessment of worker radiation exposure.

- Suspending any and all Site operations, if necessary, to maintain safe conditions or ensure compliance with requirements of this RPP and applicable regulations.

Company Radiation Safety Technicians~~ (RST)}~~ are responsible for:

- Monitoring work in progress for compliance with the RPP, associated SOPs and provisions of the ALARA policy.

- Conduct of routine radiological surveys including air monitoring, exposure rate and contamination assessments.

- Informing remedial action workers of potential radiological and non-radiological hazardous conditions.

Company and Contractor/Subcontractor Remedial Action Workers are responsible for:

- Complying with all radiation protection program requirements and safety rules, and applicable RPP-SOPs.

- Complying with the project ALARA policy and requirements.

- Incorporating good ALARA work practices into job functions and work performance.

- Bringing ALARA concerns to the attention of the Company Radiation Safety Officer ~~(RSO)~~ and/or the Radiation Safety Technician.

- Using assigned coveralls and other work related clothing that will remain on site for ~~be~~ laundering and re-issue.

Company personnel and subcontractors are responsible for complying with all radiation protection and safety rules, including the requirements of any Job Safety Analysis (JSA) associated with the Midnite Mine RA construction activities. Workers are responsible for incorporating ALARA work practices into job functions and work performance and for bringing ALARA concerns to the attention of the Company Radiation Safety Officer~~RSO~~ and the Company Site Safety~~Operations~~ Manager. Additional information related to management of the Radiation Protection Plan and ALARA principles is included in Sections 1.3, 2.0 and 3.0.

## 1.3 As Low as Reasonably Achievable (ALARA) Policy

This section presents the Company ALARA Policy that shall be communicated to all workers including Company employees and contractors. Procedures and engineering controls must be based upon sound radiation protection principles including taking all reasonable measures to keep occupational exposures, environmental effluents and potential exposures to members of the public ALARA. This commitment to ALARA is articulated in this Radiation Protection Plan. Standard Operating Procedures (SOPs) related to radiation safety are provided as Attachment A.

All Midnite Mine RA construction activities shall be performed in a manner such that exposures to ionizing radiation and radioactive materials above background are maintained As Low as is Reasonably Achievable (ALARA). “Reasonable” means that the economic and social factors, benefits, and risks are considered in trying to reduce worker dose, in accordance with the requirements of this plan and applicable federal regulations. The Company has developed, documented, and implemented this RPP for the Midnite Mine commensurate with the scope and extent of radiation-related construction activities to be undertaken during the RA. This RPP implements the ALARA philosophy through its use, including use of its associated procedures (See Appendix A, e.g.) and engineering controls based upon sound radiation protection principles to achieve occupational exposures and potential exposures to members of the public that are ALARA. The Company and its contractors are committed to providing resources, in the form of personnel, training, engineering controls, preparation and planning, design, equipment, monitoring devices, and administrative controls to achieve ALARA doses at its facilities.

Each employee and contractor is expected to be knowledgeable of work activities and to abide by all ALARA requirements including those described in this plan and specified in SOPs, JSAs or other safety-related instructional documents. In addition to the responsibility for his/her/their own exposure minimization, each employee is responsible for minimizing exposures to other workers and members of the public by following all applicable work rules and identifying and reporting conditions or actions that could impact radiation safety. The Company management encourages employee suggestions to incorporate the ALARA policy into work practices.

## 1.4 Applicable Standards

The Midnite Mine is governed by OSHA regulations regarding general safety. OSHA radiation exposure limits for workers, specified in 29 CFR 1910.1096, are very similar to (although less current *) than the requirements of 10 CFR 20 that must be applied to facilities licensed by the U.S. Nuclear Regulatory Commission or virtually identical regulations of the State of Washington Department of Health. Since the occupational dose limits in 10 CFR 20 are based on more current nationally and internationally accepted models and technical basis, the 10 CFR 20 exposure limits and related requirements are applied to the Midnite Mine in a graded approach as applicable, since they represent the current industry standard. Additional information regarding applicable radiation protection standards and criteria are included in Section 3.0 of this RPP.

* OSHA radiation protection requirements are based on metabolic and dosimetric models and data that predate those currently used by NRC by many years. They have not been updated since originally prepared over 35 years ago.

# 2.0 RADIATION PROTECTION PLAN

The objective of the Midnite Mine Radiation Protection Plan is to provide a safe work environment for employees and to minimize the impact of RA construction activities on the health and safety of workers, the public, and the environment. The RPP and its associated Standard Operating Procedures are part of the health and safety program and applies the principles of ALARA to control radiation exposures and other related health, safety and environmental impacts.

The Radiation Protection Plan for the Midnite Mine includes control and monitoring of exposure to uranium and its associated radioactive decay products. It consists of the following elements:

- Identifying radiation standards and guides to provide definition of applicable methods for the monitoring, control and documentation of radiation exposures.
- Designating work areas and appropriate engineering and process controls to minimize exposure to radioactive materials.
- Designing and implementing monitoring programs to measure, control and document exposures of workers to radiation above background. This includes techniques involving assignment of personal dosimeters to workers for measuring external exposure and air sampling and contamination surveys to assess potential for internal exposure of radionuclides via inhalation and / or ingestion.
- Training requirements for workers to ensure that personnel are properly informed of radiation risks, proper work procedures, procedures for minimizing exposure to radiation, and applicable regulations and guidance (USNRC Regulatory Guides, USNRC 10 CFR 20, 29 CFR 1910.120 and 29 CFR 1910.1096).
- Midnite Mine RPP Standard Operating Procedures (RPP-SOPs) designed~~related~~ to ensure that radiation safety objectives and requirements are met (See Attachment A).
- Implementing regular ALARA audits of the RPP that include reviews of radiation exposures to workers, the public, and new or proposed operations and projects on the Site to ensure the principles of ALARA are being properly applied and administered.

The worker radiation monitoring program will at a minimum include the following:

- Radiation dosimetry program, consisting of external exposure rate surveys and personal dosimeters to measure external radiation doses as required by 29 CFR 1910.1096 / USNRC 10 CFR 20 or as deemed advisable by the Company Radiation Safety Officer. ~~(RSO).~~
- Air particulates sampling to estimate potential for intake of radioactive materials and associated assessment of potential internal exposure, and to gather information for improving source control.
- Initial monitoring of ambient radon gas in air and airborne radon decay products at the bottom of the mine pits and near waste rock piles to assess potential worker exposures to radon and the need for continued radon monitoring throughout the duration of the RA construction project.
- Contamination surveys of personnel, areas and equipment to ensure potential for internal exposure and spread of contamination are minimized.
- Baseline urine bioassays for all employees~~As required~~ and contractors prior to working within controlled areas at the site, an attempt will be made to obtain a final urine bioassay sample for these personnel upon termination of employment at the site, and as deemed appropriate~~advisable~~ by the Company Radiation Safety Officer~~RSO~~ under certain

conditions, interim bioassay sampling to measure potential intakes~~actual deposition~~ of uranium during RA construction activities~~in the body~~.
- Documenting and retaining records of radiation exposures and monitoring activities.

Authorities of management positions with responsibilities for the radiation protection and monitoring program follows.

## 2.1 Authorities and Responsibilities of Organizational Functions Important to Radiation Protection

### *2.1.1 Management*

Company management is committed to the implementation and enforcement of this RPP and associated ALARA principles. The Company management regularly communicates with workers and supports decisions made by the Company Site Construction Manager, Company Site Safety Manager, and Company Radiation Safety Officer. Annual~~. RSO. Annual~~ internal audits are conducted to ensure that the programs and procedures designed to maintain radiation exposures ALARA are in place and are properly implemented. Additional information on organizational roles, responsibilities and qualifications of staff are provided in RPP-SOP1~~SOP01~~.

### *2.1.2 Company Site General Manager*

The Site Construction~~General~~ Manager ~~(SGM)~~ has overall responsibility and the authority for the effective application of the RPP. The Site Construction Manager~~SGM~~ is responsible for ensuring the necessary resources (qualified personnel, equipment, supplies, etc.) are being provided to the Company Radiation Safety Officer and Company Site Safety Manager~~RSO~~ for execution of the RPP and must “take ownership” of the RPP.

### *2.1.3 Company Site Safety~~Operations~~ Manager*

The Company Site Safety~~Operations~~ Manager ~~(SOM)~~ is responsible for the site daily operations implementation and compliance with the RPP. The Company Site Safety Manager~~SOM~~ is expected to participate in radiation safety related reviews of processes and activities, ALARA audits and to ensure all subordinate personal recognize the importance of compliance to this RPP**.** The Company Site Safety Manager~~SOM~~ has the responsibility and authority to suspend any and all Site operations, if necessary, to maintain safe conditions or ensure compliance with requirements of this RPP and applicable regulations.

### *2.1.4 Radiation Safety Officer and Radiation Safety Technician*

The RPP is managed by the Company Radiation Safety Officer~~RSO~~ and implemented, as necessary, with the assistance of one or more Company Radiation Safety Technicians. ~~(RST) or Site Safety Manager (SSM).~~ The Company Radiation Safety Officer~~RSO~~ and/or Company Radiation Safety Technician each have~~RST has~~ the authority and the responsibility to modify and stop operations if, in his/her judgment, the operation is not being carried out in a radiologically safe manner.

The Company Radiation Safety Officer~~The radiation safety officer (RSO)~~ has primary responsibility for the technical adequacy and correctness of the radiation protection and ALARA program and has continuing responsibility for surveillance and supervisory action in the

enforcement of the program. Specific authorities of the Company Radiation Safety Officer~~RSO~~ include but are not limited to:

- *Development and administration of the radiation protection and ALARA program;*
- *Sufficient authority to enforce regulations and administrative policies that affect any aspect of the radiological protection program;*
- *Review and approve plans for new equipment, process changes, or changes in operating procedures to ensure that the plans do not adversely affect the protection program against uranium and its daughters;*
- *Designate equipment and laboratory facilities adequate to monitor relative attainment of the ALARA objective;*
- *Oversight and administration of formal radiation safety training to all employees and contractor personnel.*

## 2.2 Worker Responsibility

Each Site worker (Company employee or contractor) and visitor is responsible for adhering to all rules, notices, and operating procedures including those related to radiation safety as well as promptly reporting any equipment malfunctions, deviations from the SOPs and/or this RPP, or other conditions that might affect radiation safety. General reporting procedures initially involve reporting to an immediate supervisor. Additionally, workers are encouraged to suggest improvements to the Radiation Protection Plan including practical and reasonable methods that could further reduce radiation exposures consistent with ALARA principles. These responsibilities are emphasized in worker training, and are regularly reinforced by the Company Site Construction Manager, Company Site Safety Manager, Company Radiation Safety Officer,~~SGM, SOM, RSO, RCTs~~ and Company management.

## 2.3 Standard Operating Procedures

Radiation safety related Standard Operating Procedures (SOPs) have been developed for radiation monitoring, sampling and analysis; radiological exposure and dose assessment (dosimetry); instrument use and calibration, and training. Collectively, these SOPs define specific details of the methods, procedures~~the detail~~ and protocols that will be used to implement the ~~"when, who and how" for the implementation of the~~ radiation protection and ALARA concepts, objectives and requirements as presented in this RPP. These procedures are contained in Attachment A to this RPP.

## 2.4 Minimum Training and Experience Requirements for Management Personnel

The minimum training and experience requirements for key management staff with responsibility for radiation safety are summarized in this section.

### *2.4.1 Company Radiation Safety Officer*

- Bachelor's degree in the physical sciences, industrial hygiene, health physics or engineering from an accredited college or university or an equivalent combination of training and relevant experience in radiation protection. Two years of relevant experience are generally considered equivalent to 1 year of academic study.

- At least 1 year of work experience relevant to radiation protection in uranium facilities in applied health physics, radiation protection, industrial hygiene or similar work. This experience will involve actually working with radiation detection and measurement equipment, not strictly administrative work.

- The Company Radiation Safety Officer~~The RSO~~ shall receive a minimum of 40 hours of health physics training every 2 years. The training requirement can be fulfilled by attending a single 40 hour class, attending a total of 40 hours of meetings and classes related to radiation protection at professional symposia, universities, uranium facilities or teaching 40 hours of radiation protection classes.

### *2.4.2 Company Radiation Safety Technician*

- At least two years of experience in radiation safety including use of instrumentation for conduct of radiological surveys.

- Minimum of 40 hours of formal radiation safety training.

- Minimum of 8 hours of refresher training every two years (may be on-the-job training provided by the Company Radiation Safety Officer~~RSO~~).

### *2.4.3 Remedial Action Workers* (See Section 2.5,*Training*)

- Minimum of 4 hours of General Employee Radiation Training (GERT-See Section 2.5).
- Minimum of 8 hours of Remedial Action Worker Training.
- Supervisory training as applicable.

### *2.4.4 All Other Employees and Contractors*

- Minimum of 4 hours of GERT.
- Instruction for female employees of child-bearing age on prenatal exposure and pregnancy declaration.

## 2.5 Radiation Safety Training Program

The Radiation Safety Training Programs are addressed in detail in RPP-SOP11. These training requirements apply to all personnel at the Midnite Mine Site who will receive training commensurate with the level of potential exposure to radioactive materials. Employees who work in “Controlled Areas (CA - close proximity to and/or with radioactive materials) will receive the more comprehensive remedial action worker training (RWT). Other Site employees (e.g., administrative staff) who are not regularly working in active CAs will receive “general employee radiation training (GERT)”. Visitors who will be escorted will receive an orientation from the Company Radiation Safety Officer, Company Radiation safety Technician~~RSO, RST~~, or designee. Contractors who will be on-site are provided with training specific for the radiation hazards in areas they will occupy and the activities in which they will be engaged, e.g., full remedial action worker training if applicable. The extent of the radiation training required will be determined by the Company Radiation Safety Officer~~RSO~~, but at a minimum will include the GERT program.

Female workers of child bearing age who will work in areas with elevated potential for exposure to radiation will receive additional training in the potential effects of radiation on the fetus in

accordance with the guidance contained in USNRC Regulatory Guide 8.13, *Instruction Concerning Prenatal Radiation Exposure.*

Records and documentation pertaining to radiation safety training are maintained by the Company Radiation Safety Officer~~RSO~~.

# 3.0 REGULATORY STANDARDS AND GUIDES

Radiation protection standards are provided in 29 CFR1910.1096 and in 10 CFR 20 or Agreement State administrative codes. Licensed facilities are required to comply with NRC or agreement state regulations (note that the Midnite Mine RA project is not "licensed" under the US Atomic Energy Act). OSHA radiation protection standards are similar to those of the USNRC but are based on much older metabolic and dosimetry models and associated technical basis and apply to non-licensed facilities. Since these workers are not trained in accordance with NRC requirements for licensed facilities, acceptable risk and dose limits should be reduced accordingly although application of "public exposure limits" for this worker population would not be appropriate (e.g., 100 mrem/yr above background per 10 CFR 20.1301). Accordingly, consistent with the relatively low levels of radiation exposure and risk expected to be associated with this project, and in order to maintain worker exposures ALARA, more conservative limits applicable to the RA construction activities (relative to licensed facilities) have been established for ~~the Midnite Mine RA radiation protection program and~~ this RPP. This graded approach ~~also~~ recognizes that workers will be potentially exposed to levels of radioactivity and radiation greater than the background to which the public is exposed, yet these ~~for which the~~ workers will be educated in potential radiological health risks, will be trained in radiation protection principles and procedures, and will receive the benefits associated with~~benefit of good~~ employment at the site.

## 3.1 Worker Dose Limits

As indicated above, the fundamental annual worker exposure limits established by both OSHA and NRC are similar. OSHA occupational dose limits are given in 29 CFR 1910.1096. NRC's limits are defined in 10 CFR 20~~CFR20~~.1201. The annual dose~~exposure~~ limits applicable for this project are 500 mrem Total Effective Dose Equivalent (TEDE) above background (~~which is~~ 10 % of the OSHA and NRC limits for trained "radiation workers")~~"~~ and for declared pregnant workers,~~similarly~~ 500 mrem above background to the fetus for the period of gestation. ~~(only for declared pregnant workers).~~ The TEDE includes doses received from both external exposure (e.g., gamma exposure to the whole body) as well as from internal exposure (primarily from inhalation of radionuclides in air). Methods for calculating and assigning TEDE are described in RPP – SOP10~~SOP 10~~, *Dose Calculations.*

NRC also applies a 10 mg per week intake limit for soluble uranium based on chemical toxicity. If airborne uranium concentrations are maintained below the applicable Derived Air Concentration (e.g., see RPP-SOP3~~SOP03~~, Internal Exposure Monitoring), the mass intake limit cannot be exceeded. However, the uranium species (compounds) expected to be encountered in the Midnite Mine environment (ore residues and precipitates as highly reduced mineral oxides. e.g., $UO_2$) are expected to be relatively insoluble and this limit is not expected to be applicable.

An additional administrative ~~Administrative~~ dose limit will~~limits may~~ be applied at the Midnite Mine Site. This annual administrative limit~~Generally, these limits~~ will be 50 % of the fundamental TEDE limit as~~limits~~ stated above (250 mrem/yr). The~~. A~~ purpose of this~~establishing~~

administrative limit~~limits~~ is to provide a conservative "trigger level", ~~below the fundamental project exposure limit (500 mrem/yr),~~ at which the Company Radiation Safety Officer will re-evaluate applicable procedures under the RPP~~RSO must institute an investigation~~ to determine~~identify~~ if additional measures can be taken to reduce exposures consistent with the project's ALARA policy. Annual worker TEDE values in excess~~Worker doses over 50 %~~ of 250 mrem above background should be justified and ~~these administrative limits~~ must be approved ~~and justified~~ by the Company Radiation Safety Officer~~RSO~~.

### 3.2 Release of Equipment and Land for Uncontrolled Use

Appropriate criteria that will be applied at this project for release from the site of equipment and materials for uncontrolled use is provided in the NRC's *Guidelines for Decontamination of Facilities and Equipment Prior to Release for Unrestricted Use or Termination of Licenses for Byproduct, Source, or Special Nuclear Material* (NRC, 1993). The limits are given in Table 3-1. RPP-SOP4~~SOP04~~ and RPP-SOP6~~SOP06~~ describe the procedures for the survey and decontamination of materials and equipment above these limits to allow for uncontrolled release if desirable.

**Table 3-1: Surface Contamination Limits for Unrestricted Release**

| Element | Removable Surface Activity (dpm/100 cm$^2$) | Ave. Total Surface Activity (dpm/100 cm$^2$) | Max. Total Surface Activity (dpm/100 cm$^2$) |
|---|---|---|---|
| U-nat and its decay products | 1,000 (total alpha) | 5,000 (total alpha) | 15,000 (total alpha) |
| Beta/gamma Emitters | 1,000 | 5,000 | 15,000 |

## 4.0 RADIATION SURVEYS

Radiation surveys and monitoring will be conducted according to the procedures described in RPP-SOP2~~SOP02~~ through 7~~07~~. Results of surveys will be documented, reviewed, and approved by the Company Radiation Safety Officer~~RSO~~. Surveys and monitoring are conducted as described in the following sections.

### 4.1 External Exposure and Exposure Rate Monitoring

All full time employees that work within Controlled Areas will be provided personal dosimeters (TLDs or OSLs - see RPP-SOP7, *External Dosimetry*) to~~that will~~ provide a permanent record of external exposure to gamma radiation. Additionally, routine exposure rate surveys will be performed with appropriate hand held instrumentation (See RPP-SOP4, *Survey Meter / Contamination Surveys)* to monitor~~identify~~ general exposure rates as material is moved about and radiological conditions may change. Results of these surveys will be documented and evaluated by~~will be used to establish special control areas within~~ the Company Radiation Safety Officer and/or Company Radiation Safety Technician to determine whether additional~~controlled areas to define detail of~~ radiation safety measures may be required in accordance with the ALARA policy.~~requirements and controls for task specific activities.~~ Additionally, AS-SOP6~~RPP-SOP-6~~ in Appendix S of the Midnite Mine Basis of Design Report addresses the conduct of gamma surveys of soil and waste rock materials associated with the remedial action program.

### 4.2 Particulate Air Monitoring (For Long Lived Alpha Emitters - Uranium, Thorium, Radium)

Both general area and breathing zone / lapel type (BZ) samples will be collected as necessary using a graded approach, based on the judgment of the Company Radiation Safety Officer.RSO. In general work areas, it is expected that routine area grab sampling will be adequate to monitor and document radionuclide concentrations in air. However, during excavation of the sediments from Pits 3 and 4, continuous BZ sampling of workers with the highest potential for inhalation exposure shall be conducted until such time as operational data indicates it is not necessary. Similarly, pending operational experience, BZ sampling in other active areas should be performed for workers havingperforming job functions with the highest potential for intake. BZ air sampling will be performed with a properly calibrated personal sampling pump as per RPP-SOP5SOP05, *Air Sampling*. Air samples will be collected and analyzed for gross alpha activity by the Company Radiation Safety TechnicianRST in accordance with RPP-SOP2SOP02, *Scalers / Detectors* and RPP-SOP5. The counting equipment will be calibrated with National Institute of Standards and Technology (NIST) traceable standards. If air particulate results by gross alpha counting exceed 10% of the DAC (6E-11 µCi/ml) for ore dust (RG 8.30; RPP-SOP5), work in the affected area will be suspended pending evaluation by the Company Radiation Safety Officer of the adequacy of dust suppression measures, need for a radiation work permit (RWP), need for bioassay samples from potentially exposed workers, and potential use of respiratory protection before work can continue in the affected area (see also sections 5.0 and 13.0).), see also sections 5.0, 13.0 and RPP-SOP5.

In addition to sampling general work areas, air particulate samples will be taken at appropriate locations around the site in accordance with the Air Quality Monitoring Plan (AQMP).on site to ensure concentrations in public areas do not exceed 10 CFR 20 Table 2 concentrations in unrestricted areas of 9E-14 µCi/ml.

### 4.3 Radon and Progeny Monitoring

**In general, radon**Prior to initiation of RA activities, historical data on radon concentrations in air will be reviewed and general baseline levels established. However, in general, radon gas monitoring is not expected to be necessary for outdoor work at the Midnite Mine because the radon emanating from the surface materials is dispersed before the particulate decay products (the major contributors to dose) build up and in general radon exposures are expected to be low. **Nonetheless**However, based on review of the historical data, if deemed necessary by the RSO, radon-222 and **short lived**/or decay product **(radon progeny)** concentrations will be measured **during initial project phases near/on ore piles**using Alpha Track Detectors (ATDs) and **at the bottom of the pits. If it is consistently demonstrated that exposure is not above 10 % of**/or the **DAC**Kusnetz Method, or equivalent, as described in **these areas, this monitoring can be reduced or discontinued at the discretion of the Company Radiation Safety Officer.** RPP-SOP05.

Long-term average Radon-222 gas concentrations in air will be measured with Alpha Track Detectors (ATDs) as described in RPP-SOP5. Alternatively, at the discretion of the Company Radiation Safety Officer, shorter-term radon-222 measurements will be performed with a Durridge RAD7 Radon detector in accordance with the operating procedures provided in the instrument's User Manual included in Attachment C. Capable of measuring concentrations as low as 0.1 pCi/L, the Durridge RAD7 can measure radon-222 in short-term samples (e.g. 5 – 120 minutes) for temporal comparability to radon progeny grab sample measurements, and can also be programmed for real-time continuous radon monitoring over longer periods (e.g. a

record of radon-222 concentrations over several days to evaluate diurnal fluctuations). In the event that the RAD7 is selected for use, general measurement procedures are provided in the User Manual, and specific SOPs will be developed once site-specific measurement objectives have been determined through initial testing and evaluation. Radon progeny measurements will be conducted using the standard Kusnetz Method, or equivalent, as described in Attachment 5-3 of RPP-SOP5.

### 4.4 Personal Contamination Surveys

Personnel working inside Midnite Mine controlled areas will survey~~monitor ("frisk")~~ their shoes, hands, clothing and any other areas of the body that may have become contaminated before leaving the controlled area and the Site and document same on a form provided at the survey~~frisking~~ stations. (Note that workers will be provided coveralls and related work clothing that will remain and be laundered on site – see also Section 2.2, Worker Responsibility). Personnel will be trained (See RPP-SOP11) in use of the alpha survey meter and/or the pancake GM probe, or equivalent, for personal and equipment surveys and proper documentation of survey results. The procedure for conduct of these surveys is presented in RPP-SOP4, *Survey Meter / Contamination Surveys*. The goal for personal contamination is levels indistinguishable from background. Personal contamination action levels are indicated ~~by an alarm or a set point~~ on the Personnel Exit Survey Log Sheet.~~alpha meter/scaler (0 cpm > background alpha) and by a set point on the meter with the pancake probe (100 cpm > background beta-gamma).~~ In general, personnel are required to decontaminate themselves and/or their personnel effects (or seek assistance from a Company Radiation Safety Technician~~an RCT if necessary)~~ if the action level is exceeded and decontamination measures prove ineffective).~~.~~ Personal decontamination procedures are provided in RPP-SOP6~~SOP06~~, *Decontamination*.

Repeated personnel contamination is an indication of improper hygiene or training. Repeated personnel contamination will be investigated by the Company Radiation Safety Officer~~RSO~~ with corrective actions taken (e.g. retraining personnel).

### 4.5 Equipment Contamination Surveys

Equipment and vehicles released for uncontrolled use after having been used within controlled areas of the Midnite Mine will be surveyed for contamination according to the procedures for contamination surveys described in RPP-SOP4~~SOP04~~. If total (~~the~~ fixed + removable) activity measurements indicate~~measurement indicates~~ contamination levels above the limit for removable contamination, ~~a~~ swipe tests need~~test needs~~ to be performed as per RPP-SOP4~~SOP04~~. Decontamination procedures to be employed in the event the level of contamination exceeds the release limits are provided in Section 3.3 (Table 3-1) are also provided in RPP-SOP6~~SOP06~~.

### 4.6 Instrument Calibration

All portable survey instruments (detectors, rate meters and scalers) used at the Site will be calibrated annually, or as recommended by the manufacturer, by a qualified calibration facility. ~~certified to perform such work.~~ Instrument function check and QC measurements~~reproducibility~~ will be performed~~verified~~ daily ~~or~~ prior to ~~each~~ use in the lab or the field as described in RPP-SOPs 2~~02~~ and 4. Daily QC check readings that fall outside established control limits~~04. These instruments shall be checked with a source for consistency. Any inconsistency~~ will be noted and corrected through service, repair, or recalibration as necessary.

Calibration records will be maintained by the Company Radiation Safety Officer.~~RSO.~~ Flow rates for personal and area air samplers will be checked and recorded prior to each use and the equipment will be calibrated as described in RPP - SOP5. Breathing zone/lapel and high volume air samplers will be calibrated according to the manufacturer's directions or applicable regulatory requirements.

## 5.0 RESPIRATORY PROTECTION PROGRAM

It is unlikely that respiratory protection from airborne~~for~~ radionuclides will be routinely necessary during RA construction activities at the Midnite Mine due to mandatory dust suppression measures and typically very~~the generally~~ low concentrations of radioactivity when~~if~~ dusts are controlled to below visible levels. Engineering, administrative and/or workplace process controls (such as dust suppression during excavation of mine materials, and stationing workers upwind of active excavation areas wherever possible) will~~must~~ be the primary means of controlling exposures~~used~~ to ~~the extent feasible to control~~ airborne radionuclide concentrations and associated potential for inhalation exposures. The circumstance with the ~~, i.e., use of water to reduce dust emissions during excavation of potentially contaminated soils and materials. The~~ highest potential to require use of ~~for the need for~~ respiratory equipment ~~use for radiation protection purposes~~ is expected to be extraction of the uranium sludge from the bottom of the pits. General Area and Breathing Zone (BZ) air sampling during initial excavation of this material will determine if respirators are required. At the discretion of the Company Radiation Safety Officer~~RSO~~, respiratory protection may be required if there is a potential for employee exposures~~exposure~~ to airborne radioactive material concentrations in excess of~~air >~~ 10 % of the 6 E-11 µCi/mL DAC for ore dust as specified in~~of 6 E-11 from~~ USNRC 10 CFR 20, Appendix B (i.e. air concentrations > 6 E-12 µCi/mL).~~.~~

In the event that respiratory protection is required~~advisable~~ for these or any other Site activities within controlled areas, the respiratory protection program will be conducted in accordance with 29 CFR 1910.134 or US NRC 10 CFR 20, Subpart H and RPP-SOP8~~SOP08~~, *Respiratory Protection*. Since a period of time is required to properly medically qualify and train workers for respiratory use, ~~it may be advisable to qualify~~ a small, select group of workers will be specifically trained and medically qualified at the beginning of the project in the event that the need is identified for specific, ad-hoc project tasks in the future.

## 6.0 CONTROL OF RADIOACTIVE MATERIALS AND RADIATION EXPOSURE

The radioactive materials present in the Midnite Mine impacted area are limited to uranium and its decay products in waste rock, low grade uranium ore, uranium sludge at the bottom of the pit and contaminated pit water. Processes and procedures to control access to controlled areas and radioactive materials are described in RPP-SOP9~~SOPs 09~~, *Access Control*. Where necessary, access control, security and dust control measures designed to keep radiation doses ALARA will be used. Additionally, worker coveralls, PPE and related work clothing will remain on site at all times for laundering and subsequent re-issue. As practical, clothing / PPE will be surveyed for contamination prior to reissue and re washed if necessary. The contamination limits presented in Table 3-1 are applicable to clothing and PPE.

Since the primary pathway of exposure to workers is from gamma radiation~~rays~~ from uranium~~uranium's~~ decay products (primarily ~~e.g., radium 226 - actually from the decay of its decay products~~ Pb-214 and Bi-214, which are short-lived decay products of Ra-226), minimizing

time spent in close proximity to large quantities of mine~~radioactive~~ materials and maximizing distance from these materials as is practicable given the work to be accomplished,~~reasonable~~ is the most direct way of maintaining exposures ALARA. From a practical perspective, this means that break areas, sanitary facilities, office areas, etc. will~~should~~ be located as far away from large quantities of ore, waste rock and sludges as is practical and time spent in the immediate vicinity of these materials will~~should~~ be kept to a minimum consistent with the ability to otherwise safely accomplish project objectives. Methods for conducting exposure rate surveys are provided in RPP-SOP4, *Survey Meter / Contamination Surveys.*

## 7.0 SEALED SOURCES

Several small, exempt quantity instrument check sources will be required for the project. These small sealed radioactive~~The~~ sources will be securely kept at the project radiation safety office and~~. These low activity exempt sources~~ will be used for routine instrument function and measurement quality control checks. The Company Radiation Safety Officer~~operability verifications to check whether survey instruments appear to be operating properly. The RSO~~ will keep an inventory of these instrument check sources.

## 8.0 FEMALE EMPLOYEES OF CHILD BEARING AGE AND PRENATAL RADIATION EXPOSURE

All female employees as well as female contractors who will be working at the Midnite Mine RA project will be given special training about circumstances and risks of prenatal exposure. Such instructions are based on the information provided in NRC Regulatory Guides 8.36 (1992) and 8.13 (NRC, 1999). The 10 CFR 20 dose limit for the embryo/fetus (500 mrem for the period of gestation) and associated monitoring requirements will be implemented for any “declared pregnant woman”, i.e., a woman who has declared in writing to the Company that she is pregnant along with the estimated date of conception. Any declared pregnant woman who could receive a radiation dose in excess of background from work at the Midnite Mine will be issued a personal dosimeter that will be exchanged monthly. The Company will review the monitoring report on a monthly basis and will track the potential dose to the fetus. Additional information is provided in RPP-SOP11~~SOP 11~~, *Training.*

## 9.0 RADIATION PROTECTION WORK RULES – APPLICABLE TO ALL EMPLOYEES AND CONTRACTORS

General radiation safety work rules, developed to keep radiation doses to workers ALARA, are as follows:

- No smoking, eating or chewing in RA controlled areas where radionuclide concentrations are elevated. To the extent feasible, breaks will~~should~~ be taken in areas outside the Midnite Mine controlled areas. However, if that is not reasonable or feasible, an area or vehicle isolated from large quantities of radioactive materials may be designated as a break area.

- Workers must clean hands and face before eating, drinking or smoking. Alternatively, wet wipes, wash water and cleaning materials may be kept in the vehicles used for transporting workers and equipment.

- After completing activities for the day and before eating, drinking, or smoking, workers will~~should~~ survey hands, feet, and other parts of the body that might have become contaminated. The locations of survey~~frisk~~ stations with appropriate survey meters will be established by the Company Radiation Safety Officer~~RSO~~. Alpha and/or beta/gamma survey instruments may be assigned to work groups.

- Personnel must wear their assigned personal dosimeters at all times while at the Midnite Mine. Personnel will be trained in proper care of their dosimeters to ensure that the devices do not become contaminated, damaged, or lost and that they are stored properly when not in use (see~~See~~ RPP-SOP7~~SOP07~~). The Company Radiation Safety Officer~~RSO~~ will designate storage locations in an area with direct gamma exposure rates that are as close to background as is feasible.

Workers who violate these radiation safety work rules may be subject to disciplinary actions. This applies both to Company employees and contractors.

## 10.0 PERSONAL PROTECTIVE EQUIPMENT

The Company Site Safety Officer~~SSM~~ and/or Company Radiation Safety Officer~~RSO and the Site Operations Manager~~ will determine the required personal protective equipment (PPE) for RA construction tasks and/or conditions. As noted in Section 9.0, safety shoes, safety glasses and hard hats are required at the Midnite Mine in any area where heavy equipment, drill rigs, or trucks are operated or in other areas as designated by the Company Radiation Safety Officer~~RSO~~, Site Safety Officer or as specified in task-specific SOPs/JSAs. It is anticipated that at a minimum, all work will be performed in Level D personal protective equipment, i.e., work clothes and gloves. ~~At the RSO's discretion, respirators will be worn at levels ≥ 10% of the DAC (RPP-SP08).~~

Worker coveralls, PPE and related work clothing will remain on site at all times and will be regularly laundered for subsequent re-issue. Washing facilities will be on site to accomplish this. As practical, used clothing will be surveyed for contamination prior to issue and rewashed if necessary. See also Section 6.0.

## 11.0 CONTAMINATION CONTROL

As noted in Section 4, personnel and equipment surveys are necessary to prevent the spread of contamination. The contamination limits for release of equipment/materials for uncontrolled use are given in Table 3-1. A description of survey and decontamination methods is provided in RPP-SOP4~~SOP04~~ and RPP-SOP6~~SOP06~~. The goal for personnel contamination levels are always background.

## 12.0 PERSONAL DOSIMETRY PROGRAMS

All employees at the Midnite mine RA (company/contractor)~~project and contractors~~ working in controlled areas will be assigned personal monitoring devices to measure and document external radiation exposure using thermoluminescent dosimeters (TLDs) or optically stimulated luminescent dosimeters (OSLs). Additional monitoring, including air sampling, contamination assessments, bioassay etc. to assess potential for internal exposure~~,~~ may be required for specific job functions and/or under unusual circumstances as described elsewhere in this RPP and at the discretion of the Company Radiation Safety Officer.~~RSO.~~

## 12.1 Personal Dosimeters (Direct Radiation Exposure Monitoring)

Direct (external) radiation doses are measured using personal dosimeters (TLDS or OSLs) Dosimeters will be worn on the outer clothing between the waist and the neck. Dosimeters are to be stored at a location designated by the Company Radiation Safety Officer~~RSO~~ when not in use on the Site. Lost dosimeters must be reported immediately to the Company Radiation Safety Officer.~~RSO.~~ The Company Radiation Safety Technician r~~RSO~~ will issue a replacement badge as soon as practicable. The Company Radiation Safety Officer~~The RSO~~ will calculate the "missed dose" by pro-rating the dose recorded on the replacement badge or extrapolating from measured co-worker doses. Additional detail on the personnel dosimetry program is provided in RPP-SOP7, *External Dosimetry.*

The dosimeters will be obtained from a National Voluntary Laboratory Accreditation Program (NVLAP) certified vendor and exchanged quarterly~~monthly~~ or as determined by the Company Radiation Safety Officer.~~RSO.~~ Exposure/dose records will be maintained by the Company Radiation Safety Officer and distributed to the monitored individual.~~RSO.~~ The data collected using personal dosimeters~~dosimetry~~ will be evaluated periodically to determine if ALARA objectives are being achieved and if additional exposure reduction strategies are warranted.

## 12.2 Declared Pregnant Workers (DPW) Dosimetry

Based upon recommendations of the National Council on Radiation Protection and Measurements (NCRP, 1998) and on regulatory requirements and recommendations (See section 8.0), controls are established for the protection of the embryo/fetus during a female worker's pregnancy. These controls ensure minimization of risk to female employees and their unborn child and to protect the rights of the female worker.

A DPW shall not be permitted to enter airborne radioactivity areas or be assigned to tasks that could lead to internal radionuclide intakes without written authorization by the Company Radiation Safety Officer.~~RSO.~~ Any DPW shall be issued a personnel monitoring device (TLD or OSL). Exposures to the DPW and embryo/fetus shall be assessed by the Company Radiation Safety Officer~~RSO~~ on a monthly basis. Any woman who does not declare her pregnancy shall not be subject to special controls or treatment with respect to work assignments involving exposure to radiation.

## 12.3 Bioassay

~~All employees shall provide a "pre-employment / baseline" urinalysis sample prior to entering any project controlled area and a "termination" sample prior to being provided their final paycheck. These samples will be analyzed for total uranium and for the biomarkers associated with potential renal injury (e.g., glucose, lactate dehydrogenase (LDH) and/or protein albumen).~~

~~Although not expected to be required for exposure assessment under routine conditions, under unusual circumstances at the discretion of the RSO, personnel working at the Midnite Mine may be required to provide a bioassay (urinalysis) sample(s) designed to assess the intake of uranium, as appropriate.~~ The bioassay program is described in RPP-SOP3~~SOP03~~, *Internal Exposure Monitoring*. Baseline urine bioassays will be required for all company employees, contractors and subcontractors prior to working within controlled areas at the site, and an attempt will be mad to obtain a final urine bioassay sample from these personnel upon termination of employment at the site. In addition, at the discretion of the Company Radiation Safety Officer, interim~~The frequency of required~~ bioassay sampling may be required to evaluate

potential intakes of uranium during RA construction activities (see RPP-SOP3 for further details).~~is determined based on the circumstances of potential uranium intake as assessed by the RSO.~~ The bioassay program will follow recommendations in ~~American National Standard, *Bioassay Programs for Uranium* (HPS N13.22 -1995 and~~ USNRC Regulatory Guide 8.22, *Bioassay at Uranium Mills*). Copies of ~~Additional information on~~ bioassay results will~~as may~~ be provided to subject personnel upon final review by the Radiation Safety Officer.~~applicable to this project is provided in RPP-SOP3~~

### 12.4 Calculation of Total Effective Dose Equivalent (TEDE)

The total effective dose equivalent (TEDE) will be determined annually for all remedial action workers based on personal dosimeter data and potential inhalation intakes from air sample results, and by results from bioassay, as applicable. Results approaching regulatory and/or administrative limits will be investigated to ensure proper implementation of the radiation protection and ALARA program. Detail of the requirements and methods to be used for assessing worker dose is provided in RPP-SOP10, *Dose Calculations*.

## 13.0 RADIATION WORK PERMIT (RWP)

RWPs will be issued at the discretion of the Company Radiation Safety Officer~~RSO~~ when unusual or unexpected radiological exposure conditions may exist. RWPs will be necessary at air particulate levels ≥ 10% of the appropriate DAC or higher. RWPs may also be required for activities that, at the discretion of the Company Radiation Safety Officer~~RSO~~, could involve employee radiation exposure above background for which no Standard Operating Procedure exists.

## 14.0 RECORDS

Personnel dosimetry, and results of exposure monitoring and calculations shall be provided to applicable personnel upon request or termination, and the records will be retained by the Company for at least ten years after project termination. Estimates of the Effective Dose Equivalent (EDE) for both external and internal radiation exposure shall be performed and the TEDE (combination of EDE from external and internal exposure) shall be calculated, documented in individual exposure record files and reported (See Section 12.4). Records shall be retained, in either hard copy or electronic format.

## 15.0 BIBLIOGRAPHY

International Commission on Radiological Protection (ICRP) 1994. *Dose Coefficients for Intakes of Radionuclides by Workers.* Publication 68. Pergamon Press. New York.

International Commission on Radiological Protection (ICRP) 1996. *Age-Dependent Doses to Members of the Public from Intake of Radionuclides: Part 5.* Compilation of Ingestion and Inhalation Dose Coefficients. ICRP Publication 72. Pergamon. Elsevier Science, Inc. Tarrytown, NY.

National Council on Radiation Protection & Measurements (NCRP) 1998. *Radionuclide Exposure of the Embryo/Fetus*. NCRP Publication No. 129.

Shepherd Miller Inc. (SMI). 1999. Technical Memorandum R-D. (Radiological Characterization Site Maps for the Midnite Mine). Submitted to Bureau of Land Management, Spokane District, 1103 N. Fancher, Spokane, WA 99212. June 23, 1999. SMI# 01-252 Task 6.

U.S. Code of Federal Regulations, Title 10, Part 20. (10 CFR 20)

U.S. Code of Federal Regulations, Title 29, Part 1910 (29 CFR 1910.1096).

U.S. Environmental Protection Agency (EPA) 2006. *Midnite Mine Superfund Site, Spokane Indian Reservation, Washington, Record of Decision.* Office of Environmental Cleanup. EPA Region 10. September.

U.S. Nuclear Regulatory Commission. Regulatory Guide 8.13, Instruction Concerning Prenatal Radiation Exposure. Revision 3, June 1999.

U.S. Nuclear Regulatory Commission. Regulatory Guide 8.22. Bioassay at Uranium Mills

U.S. Nuclear Regulatory Commission. Regulatory Guide 8.36, Radiation Dose to the Embryo/Fetus. July 1992.

U.S. Nuclear Regulatory Commission. Guidelines for Decontamination of Facilities and Equipment Prior to Release for Unrestricted Use or Termination of Licenses for Byproduct, Source, or Special Nuclear Material. Division of Fuel Cycle Safety and Safeguards. April 1993.

# ATTACHMENT A
# RADIATION PROTECTION PLAN
# STANDARD OPERATING PROCEDURES

## RADIATION PROTECTION PLAN STANDARD OPERATING PROCEDURES LIST

| Document | Rev. | Title or Description | Effective Date |
|---|---|---|---|
| RPP-SOP1~~SOP01~~ | | Responsibilities and Administrative Controls | |
| RPP-SOP2~~SOP02~~ | | Data Quality Control for RPP Survey Instruments~~Scalar/Detectors~~ | |
| RPP -SOP3~~SOP03~~ | | Internal Exposure Monitoring | |
| RPP -SOP4~~SOP04~~ | | Survey Meter/Contamination Surveys | |
| RPP -SOP5~~SOP05~~ | | Air Sampling | |
| RPP -SOP6~~SOP06~~ | | Decontamination Procedures | |
| RPP -SOP7~~SOP07~~ | | External Dosimetry | |
| RPP -SOP8~~SOP08~~ | | Respiratory Protection | |
| RPP -SOP9~~SOP09~~ | | Access Control | |
| RPP -SOP10 | | Dose Calculations | |
| RPP -SOP11 | | Training | |

| MIDNITE MINE RA<br>RADIATION PROTECTION PROGRAM<br>STANDARD OPERATING PROCEDURES | **RPP-SOP01**<br>**REVISION: 2** |
|---|---|
| **RESPONSIBILITIES AND ADMINISTRATIVE CONTROLS** | **PAGE: 1 OF 24**<br>**DATE: May 20, 2014** |

## ~~Approvals~~

~~**This Midnite Mine Radiation Protection Program SOP has been reviewed and approved by the following:**~~

| ~~Name~~ | ~~Title~~ | ~~Date~~ |
|---|---|---|
| | ~~Site General Manager~~ | |
| | ~~Site Operations Manager~~ | |
| | ~~Radiation Safety Officer~~ | |

# Table of Contents


**1. PURPOSE ..... 34**

**2. RESPONSIBILITY ..... 34**

2.1. SITE MANAGER ..... 34
2.2. RADIATION SAFETY TECHNICIAN ..... 45
2.3. REMEDIAL ACTION WORKERSRADIATION WORKERS ..... 5

**3. PRECAUTIONS ..... 56**

**4. EQUIPMENT AND MATERIALS ..... 6**

**5. PROCEDURE ..... 6**

5.1. MINIMUM REQUIREMENTS FOR THE ORGANIZATIONAL FUNCTIONS IMPORTANT TO RADIATION PROTECTION ..... 6
5.2. ALARA AND RELATED AUDITS OF THE RADIATION PROTECTION PROGRAM ..... 7
5.3. WEEKLY RSO/RST INSPECTIONS ..... 8

**6. RECORDS ..... 8**

6.1. GENERATION AND REVISION OF STANDARD OPERATING PROCEDURES ..... 8

**7. REFERENCES AND BIBLIOGRAPHY ..... 9**

**8. ATTACHMENTS ..... 10**

## 1. PURPOSE

For the purpose of this Standard Operating Procedure the Midnite Mine is assumed to refer to operations at the Midnite Mine that are under the control of DMC/Newmont for the Midnite Mine Superfund Site (Phase I RD/RA). These procedures are not necessarily applicable to any other activities. Procedures may be changed as necessary to address conditions at the Midnite Mine.

This procedure provides guidance regarding the Midnite Mine policy to keep exposures to radiation and to radioactive material As Low As is Reasonably Achievable (ALARA – see also Attachment 1-1), for the performance of radiation protection program audits and reviews, to define the corporate structure of the Midnite Mine RA project as related to radiation protection, for the generation of procedures, notification and reporting requirements, and definitions. This procedure also addresses aspects of the Quality Assurance Program related to maintaining exposures ALARA. Areas of the Quality Assurance Program discussed within this procedure are applicable to the Radiation Protection Program and Environmental Monitoring Program.

The Radiation Protection Program is defined and documented in the Radiation Protection Plan (RPP) and an associated set of Standard Operating Procedures (SOPS) as follows:

RPP-SOP01 Responsibilities and Administrative Controls
RPP-SOP02 Scalar/Detectors
RPP-SOP03 Internal Exposure Monitoring
RPP-SOP04 Survey Meter/Contamination Surveys
RPP-SOP05 Air Sampling
RPP-SOP06 Decontamination
RPP-SOP07 External Dosimetry
RPP-SOP08 Respiratory Protection
RPP-SOP09 Access Control
RPP-SOP10 Dose Calculations
RPP-SOP11 Training

## 2. RESPONSIBILITY

The functions within the project organization with direct responsibility and authority for execution of the Radiation Protection Program are discussed in this section.

2.1. Site Operations Manager

- Responsible for ensuring that the ALARA Policy is communicated to all employees.
- Responsible for ensuring that Radiation Protection Program policies are implemented.
- Responsible for ensuring that audit recommendations and responses are resolved and completed in a timely fashion.
- Responsible for suspending Phase I RD/RA activities, including any and all Site operations, if necessary, to maintain safe conditions or ensure compliance at Midnite Mine.

- Responsible for approving all Midnite Mine Standard Operating Procedures and Quality Assurance documents to ensure consistency, safety, and overall efficiency of site operations and work flow. Radiation Safety Officer (RSO)
- Responsible for developing the project Radiation Protection Program, radiological training programs and evaluating compliance with radiation protection policies and ALARA principles.
- Responsible for participating in modification/design reviews for facilities and equipment that can affect potential radiation exposures.
- Responsible for developing plans, procedures, and methods for maintaining radiation exposures of Dawn Mining Company personnel, contractors and visitors associated with the Phase I RD/RA activities ALARA.
- Responsible for identifying locations, operations, and conditions that have the potential for causing exposures to radiation above limits.
- Responsible for reviewing, commenting on, and recommending changes in operational procedures to maintain occupational exposures ALARA.
- Responsible for performing and/or reviewing results of audits and approving audit responses and corrective actions as necessary.
- Responsible for overall generation, review, approval, technical verification, and implementation of Midnite Mine Standard Operating Procedures.
- Responsible for reviewing procedures for overall radiological health and safety.
- Responsible for maintaining records related to the Radiation Safety Program including those related to radiological monitoring and assessment of worker radiation exposure
- Suspending any and all Site operations, if necessary, to maintain safe conditions or ensure compliance with requirements of this RPP and applicable regulations.

2.2 The Radiation Safety Officer (RSO) is responsible for:

- Developing the project Radiation Protection Program, radiological training programs and evaluating compliance with radiation protection policies and ALARA principles.
- Participating in modification/design reviews for facilities and equipment that can affect potential radiation exposures.
- Developing plans, procedures, and methods for maintaining radiation exposures of Company personnel, contractors and visitors associated with the Phase I RD/RA activities ALARA.
- Preparing and/or approving Radiation Work Permits on an as needed basis

- Identifying locations, operations, and conditions that have the potential for causing exposures to radiation above limits.

- Reviewing, commenting on, and recommending changes in operational procedures to maintain occupational exposures ALARA.

- Performing and/or reviewing results of audits and approving audit responses and corrective actions as necessary.

- Overall generation, review, approval, technical verification, and implementation of Midnite Mine Standard Operating Procedures.

- Developing procedures for overall radiological health and safety.

- Maintaining records related to the Radiation Safety Program including those related to radiological monitoring and assessment of worker radiation exposure.

- Suspending any and all Site operations, if necessary, to maintain safe conditions or ensure compliance with requirements of this RPP and applicable regulations.

2.2. Radiation Safety Technician

- Responsible for monitoring work in progress for compliance with the RPP, associated SOPs and provisions and the ALARA policy.
- Responsible for conduct of routine radiological surveys including air monitoring, exposure rate and contamination assessments .
- Responsible for informing remedial action workers of potential radiological and non-radiological hazardous conditions.

2.3. Remedial Action Workers

- Responsible for complying with all radiation protection program requirements and safety rules, and applicable, RPP-SOPs.
- Responsible for complying with the project ALARA policy and requirements.
- Responsible for incorporating good ALARA work practices into job functions and work performance.
- Responsible for bringing ALARA concerns to the attention of the Radiation Safety Officer (RSO) and/or the Radiation Safety Technician.
- Responsible for ensuring that work completed is in accordance with Midnite Mine's Quality Assurance Program.

## 3. PRECAUTIONS

Proper personal protective equipment shall provided by management as required to ensure radiation exposures will be maintained ALARA and will be worn whenever

entering a Controlled area. Individuals entering Controlled Areas shall be cognizant of potential hazards within Controlled Area, and shall review and understand the requirements of RPP-SOPs and all ALARA requirements.

## 4. EQUIPMENT AND MATERIALS

## 5. PROCEDURE

5.1. Minimum requirements for the organizational functions important to radiation protection

1. Site Operations Manager
   - 4 years college degree in the arts or sciences or equivalent experience.
   - 4 years of related management experience.
2. Radiation Safety Officer
   - Bachelor's degree in the physical sciences, industrial hygiene, health physics or engineering from an accredited college or university or an equivalent combination of training and relevant experience in radiation protection. Two years of relevant experience are generally considered equivalent to 1 year of academic study.
   - At least 1 year of work experience relevant to radiation protection in uranium facilities in applied health physics, radiation protection, industrial hygiene or similar work. This experience should involve actually working with radiation detection and measurement equipment, not strictly administrative work.
   - The RSO shall receive a minimum of 40 hours of health physics training every 2 years. The training requirement can be fulfilled by attending a single 40 hour class, attending a total of 40 hours of meetings and classes related to radiation protection at uranium or thorium facilities, or teaching 40 hours of radiation protection classes.
3. Radiation Safety Technician
   - At least two years of experience in radiation safety.
   - Minimum of 40 hours of formal radiation safety training.
   - Minimum of 8 hours of refresher training every two years (may be on-the-job training provided by the RSO).
4. Auditor and Inspectors
   - Shall be competent in the area in which they are inspecting (e.g. radiation safety auditors shall have knowledge of such systems.)
5. Facility Staffing
   - Minimum staffing while operations at the Site (as described in 1.0) are being conducted shall be at least one of the following: Site Manager, Plant Manager, Radiation Safety Officer, or Radiation Safety Technician.

## 5.2. ALARA and Related Audits of the Radiation Protection Program

- This section provides guidance on the conduct of audits. The purpose of the audit is to determine the effectiveness of the Midnite Mine Radiation Protection Program and ALARA principles, to identify any areas of regulatory or procedural noncompliance, administrative requirements, operating and health physics procedures, and general plant safety. Documentation including audit reports, responses, corrective actions and related correspondence shall be maintained in accordance with the Midnite Mine Quality Assurance Plan. All audits shall include the use of checklist that include the item reviewed, the status of compliance, the reason for not being in compliance and recommended corrective actions as applicable.

- ALARA Audits

  An ALARA audit of the radiation safety program shall be performed at least once each calendar year. The ALARA audit shall be led by the RSO, and the audit team should include a representative from Dawn Mining Company management. ALARA audits shall include, at a minimum, a review of the following records.

  .

  - Records of external and internal exposures.

  - Safety meeting minutes, attendance records, and training program records.

  - Any daily or monthly inspection reports required by the radioactive materials licenses.

  - Radiological survey and monitoring data including external exposure rate, air monitoring and contamination survey data, as well as environmental radiological effluent and monitoring data.
  - Reviews of operating and monitoring procedures prepared and/or revised during the period.

  - Bioassay results, including any actions taken when the results exceeded action levels in Table 1 of Regulatory Guide 8.22, “Bioassay at Uranium Mills,” dated January 1987

  - Undesirable trends in personnel exposures for identifiable categories of workers and types of activities.
  - Trends in radiological effluent release data.

  - Performance of exposure monitoring and control equipment, and the utilization, maintenance, and inspection history for such equipment.

  - Summaries of the analytical results of the radiological surveys.

- Any recommendations to further reduce personnel exposures or environmental releases of radioactive material

An ALARA audit report shall be submitted to the Site Manager within 30 days after conducting the audit. Deficiencies identified through the audit will generally be addressed and corrected during the audit to the extent feasible but at least within 14 working days of completion of the audit report.

5.3. Weekly RSO/RST Inspections

The RSO or RST shall complete a documented inspection of all work areas at least weekly. Any deficiency noted during the inspection shall be corrected within 7 working days. The RSO will review and approve inspection reports. A summary of the results of the inspections shall be included in the Annual ALARA Report

## 6. RECORDS

6.1. Generation and Revision of Standard Operating procedures

This guidance for the generation, revision, review, and approval of procedures will help to ensure that activities affecting quality meet all regulatory requirements, are consistent in format, and are easy to understand. The RSO or QA manager (Site Manager) shall designate an author to develop a draft procedure or revision. All procedures shall be approved by the Site Manager and the RSO Document Identification for Midnite Mine Radiation Protection Procedures are described as follows: Procedures are numbered in the format RPP-SOPXX, where:

| | | |
|---|---|---|
| RPP | = | Radiation Protection Plan |
| SOP | = | Standard Operating Procedure |
| XX | = | Number (i.e. RPP-SOP01) |

Cover page (front page) is the review and approval sign-off page for the procedure.

Attachments should be identified as “Attachment XX-YY” where:

| | | |
|---|---|---|
| XX | = | Procedure number (e.g., 01, 02, etc.) |
| YY | = | Attachment number (i.e. 01, 02, 03, etc.) |

Example: The second attachment to RPP-SOP01 would be labeled as Attachment 1-2.

The format of the procedures should be as follows:

| Section | Title |
|---|---|
| 1.0 | Purpose |
| 2.0 | Responsibility |
| 3.0 | Precautions |

4.0 Equipment and Materials
5.0 Procedure
6.0 Records
7.0 References
8.0 Attachments

Purpose: Should be described in one or more simple statements.

Responsibility: Individual or group responsibilities should be designated.

Precautions: Identify any precautions necessary to minimize the possibility of injury to personnel or damage of equipment.

Equipment and Materials: Identify or list special tools, equipment or supplies necessary to perform the procedure.

Procedure: List the step-by-step sequence of events necessary to accomplish the purpose of the procedure.

Records: Identify those documents or records which are generated as a result of performing the procedure.

References: List references that were used to develop the procedure.

Attachments: List the attachments to the procedure.

## 7. REFERENCES AND BIBLIOGRAPHY

Washington Administrative Code

Midnite Mine Quality Assurance Plan and Procedures

ANSI N1.1-1976, “American Nuclear Standard Glossary of Terms in Nuclear Science and Technology”

ANSI N13.1-1969, “Guide to Sampling Airborne Radioactive Materials in Nuclear Facilities”

ANSI N13.15-1985, “American National Standard for Radiation Detectors - Personnel Thermoluminescence Dosimetry Systems - Performance”

ANSI N13.30-1989D, “Performance Criteria for Radiobioassay (Draft)”

ANSI N323-1978, “Radiation Protection Instrumentation Test and Calibration”

ANSI N42.17A-1090, “Radiation Instrumentation - Performance Specifications for Health Physics Instrumentation - Portable Instrumentation for Use in Normal Environmental Conditions”

ANSI Z88.2-1980, “Practices for Respiratory Protection”

NCRP 87-1987, “Use of Bioassay Procedures for Assessment of Internal Radionuclide Deposition”

## 8. ATTACHMENTS

Attachment 1-1 - Midnite Mine ALARA Policy

Attachment 1-2 - Glossary

**ATTACHMENT 1-1**

## MIDNITE MINE
## ALARA POLICY

Midnite Mine operations shall be performed in a manner such that exposures to radiation and to radioactive materials are maintained As Low as is Reasonably Achievable (ALARA). social and economic factors taken into account. The basic philosophy of radiation protection is to maintain radiation exposures ALARA and below the regulatory requirements. “Reasonable” means that the costs, benefits, and risks are considered in trying to keep doses ALARA.

The Midnite Mine Radiation Protection Program embraces the ALARA philosophy through its use, to the extent practicable, of procedures and engineering controls based upon sound radiation protection principles to achieve occupational doses and doses to members of the public that are ALARA. Dawn Mining Company is committed to providing resources, in the form of personnel, training, engineering controls, preparation and planning, design, equipment, monitoring devices, and controls to achieve ALARA doses at its facilities.

Each employee is expected to be knowledgeable of work activities and associated hazards, and to abide by all ALARA requirements such as those found in the project Radiation Protection Plan (RPP) and its associated Standard Operating Procedures (SOPs). In addition to the responsibility for his/her own radiation exposure minimization, each employee is responsible for application of ALARA principles to minimize exposures to other workers and members of the public. Dawn Mining Company encourages your suggestions to incorporate the ALARA policy into work practices.

_____Date_____
Radiation Safety Officer

_____Date_____
Site Manager

**ATTACHMENT 1 - 2**

## GLOSSARY

**Absorbed Dose:** Energy imparted by ionizing radiation per unit mass of irradiated material. The units of absorbed dose are the rad and the gray (Gy).

**Access Control Point:** An area established to provide control over the entry to and exit from a Radiologically Controlled Area (RCA).

**Activity:** Rate of disintegration (transformation) or decay of radioactive material. The units of activity are the curie (Ci) and the Becquerel (Bq).

**Administrative Changes:** Administrative changes to documents are defined as editorial corrections (e.g., grammatical, typographical, etc.) or other administrative changes such as personnel title changes, changes in procedure names, or other changes that do not alter the technical or procedural content of a document.

**Administrative Controls:** The formal procedures or rules established and monitored by Midnite Mine management to ensure safety and controlled operation of the facility in accordance with licenses, regulations, corporate policy, and the ALARA policy.

**Administrative Limit:** A radiation dose limit established by Midnite Mine management for the purpose of maintaining radiation dose below regulatory limits.

**Adult:** An individual 18 or more years of age.

**Airborne Radioactive Material or Airborne Radioactivity:** Any radioactive material dispersed in the air in the form of dusts, fumes, particulates, mists, vapors, or gases.

**Airborne Radioactivity Area:** A room, enclosure, or area in which airborne radioactive materials exist in concentrations in excess of the Derived Air Concentrations (DAC's) specified in 10 CFR 20 or to such a degree that an individual present in the area without respiratory protection equipment could exceed, during the hours an individual is present in a week, an intake of 0.6% of the Annual Limit on Intake (ALI) or 12 DAC hours.

**ALARA:** Means "As Low as is Reasonably Achievable". The basic philosophy of radiation protection is to maintain radiation exposures ALARA below the regulatory requirements. "Reasonable" means the costs, benefits, and risks are considered in trying to keep doses low.

**Alpha Particle:** A positively charged particle ejected spontaneously from the nuclei of some radioactive elements. It is identical to a helium nucleus that has a mass number of 4 and an electrostatic charge of +2.

**Annual Limit on Intake (ALI):** The derived regulatory limit for the amount of radioactive material that can be taken into the body of an adult worker by inhalation or ingestion in a year. An ALI is the smaller value of intake of a given radionuclide in a year by the reference man that would result in a committed effective dose equivalent of 5 rems or a committed dose equivalent of 50 rems to any individual organ or tissue.

**Audit:** An evaluation of the effectiveness of a program to determine the adequacy of and adherence to established procedures, instructions, specifications, regulations and standards, and other applicable permitting and licensing requirements.

**Atomic Number (Symbol Z):** The number of protons in the nucleus of an atom.

**Background:** Ambient signal response recorded by measurement instruments that is independent of radioactivity contributed by the radionuclide being measured in the person or sample. (ANSI N13.30-1989D)

**Background Radiation:** Radiation from cosmic sources, unregulated naturally occurring radioactive materials including radon (except as a decay product of source or special nuclear material), and global fallout as it exists in the environment from the testing of nuclear explosive devices. Background radiation does not include radiation from sources of radiation subject to licensing or regulation.

**Becquerel (Bq):** The term used to describe one disintegration per second.

**Beta Particle:** Beta particles are emitted by the nucleus of an atom to attain stability. Beta particles are negatively charged, and are emitted from the nucleus of atoms with an excess of neutrons and serve to reduce the number of neutrons in the nucleus. Beta particles have a mass equal to 1/837 that of a proton. Beta particles are easily stopped by a thin sheet of metal or plastic.

**Bioassay:** Determination of the kind, quantity, or concentration and the location of radioactive material in the human body by direct measurement (in-vivo) or by analysis of materials excreted or removed from the human body (in-vitro). (ANSI N343-1978)

**Biological Half-Life:** The time required for a biological system, such as a person, to eliminate by natural processes (other than radioactive decay) one-half of any amount of a substance (primary concern is radionuclides) that has entered it.

**Breathing Zone:** The breathing zone is that region adjacent to a worker's mouth and nostrils from which air is drawn into the lungs while he/she is performing assigned work. (ANSI N13.1-1969)

**Breathing Zone Air Sample:** Air which is drawn through or into the sample media and is representative of the workers "Breathing Zone."

**Calendar Quarter(s):** First quarter - January 1 through March 31; Second quarter - April 1 through June 30; Third quarter - July 1 through September 30; Fourth quarter - October 1 through December 31.

**Calendar Year:** From January 1 through December 31.

**Calibrate:** To adjust and/or determine:

1. The response or reading of an instrument relative to a series of conventionally true values; or
2. The strength of a radiation source relative to a standard or conventionally true value.
   (ANSI N42.17A-1989)

**Check Source:** A radioactive source, not necessarily calibrated, that is used to confirm the continuing satisfactory operation of an instrument. (ANSI N323-1978)

**Chi-Square Test:** A statistical test to determine whether the results of a series of measurements follow the expected statistical distribution. This test determines if fluctuations in measurements are of statistical origin or are possibly caused by a malfunction in some part of the counting system.

**Class (Lung Class or Inhalation Class):** Classification scheme for inhaled material according to its rate of clearance from the pulmonary region of the lung. Materials are classified as D, W, or Y. Class D (days) applies to materials with a clearance half-time of less than 10 days, Class W (weeks), for clearance half-times from 10 to 100 days, and Class Y (years) for clearance half-times of greater than 100 days. [The International Commission on Radiological Protection (ICRP) has revised the inhalation classification scheme. The new lung clearance classifications, Fast (F), Moderate (M), and Slow (S) are equivalent to the previous D, W, and Y classifications respectively.]

**Clean Shaven:** No facial hair between an individual's face and the sealing surface of the respirator and no facial hair interfering with valve function of the respirator.

**Committed Dose Equivalent ($H_{T,50}$):** Means the dose equivalent to organs or tissues of reference (T) that will be received from the intake of radioactive material by an individual during the 50 year period following the intake.

**Committed Effective Dose Equivalent ($H_{E,50}$):** The sum of the products of the weighting factors applicable to each of the body organs or tissues that are irradiated and the committed dose equivalent to these organs or tissues.

**Contact Dose Rate:** A radiation dose rate as measured with the detector or instrument case within ½ inch of the surface being measured.

**Contamination:** A radioactive substance dispersed in materials or places where it is undesirable. (ANSI N1.1-1976) Radioactive contamination may be removable (loose) or fixed.

**Continuous Air Sampling/Monitoring:** A method of sampling used to measure airborne radioactivity levels in routinely occupied areas.

**Control Badge:** Dosimeters designated for the monitoring of background radiation exposure.

**Corrective Action(s):** Action(s) taken to improve areas of performance or to eliminate causes of adverse trends in performance identified during Audits.

**Count:** The numeric reading produced by a device designed to detect ionizing events. In this usage, a "count" refers to the number of detected events registered in a given period of time.

**CPM (Counts Per Minute):** The rate of ionizing event occurrence recorded by a radiation detection instrument designed to count ionizing events caused by radiation.

**Curie (Ci):** Means 3.7 E+10 radioactive disintegration's per second (dps). It is a measure of the amount of radioactive material present. One curie equals 37 billion (3.7 E+10) Becquerel.

**Counting Efficiency:** The net number of counts registered by the detector system per unit of time, divided by the number of disintegration's originating in the radioactive source that is being measured during the same unit of time.

**Daughter Product (Decay Product):** An isotope formed by the radioactive decay of another isotope.

**Declared Pregnant Woman (DPW):** A woman who has voluntarily informed Midnite Mine, in writing, of her pregnancy and the estimated date of conception.

**Decontamination:** Means the process of removing or reducing the level of contamination on an item or individual.

**Decontamination Factor (DF):** A ratio of the radioactive material existing on a surface prior to decontamination to that remaining after decontamination. The DF is a measure of decontamination effectiveness.

**Deep Dose Equivalent ($H_d$):** The dose equivalent at a tissue depth of 1 cm (1000 mg/cm$^2$). Applies to external whole body exposure.

**Derived Air Concentration (DAC):** The concentration of a given radionuclide in air which, if breathed by the reference man for a working year of 2000 hours at 1.2 m$^3$/hour (light work), results in intake of approximately one ALI.

**Derived Air Concentration-hour (DAC-hour):** The product of the concentration of radioactive material in air (expressed as a fraction or multiple of the derived air concentration for each radionuclide) and the time of exposure to that radionuclide, in hours.

**Detector:** That portion of an instrument system sensitive to and used for the quantification of ionizing radiation. (ANSI N42.17A-1989)

**Direct Contamination Survey:** This method measures fixed and removable levels of surface contamination. A direct frisk is performed by scanning the survey location using a count rate meter within close proximity (app ½ inch, 1 cm for alpha contamination).

**Direct Reading Dosimeter (DRD):** A monitoring device consisting of a collection chamber coupled with an optical lens and calibrated scale. DRD's can be used as a device to provide individuals with an immediate estimate of their external gamma radiation exposure. This device is also known as a Self Reading Pocket Dosimeter (SRPD).

**Disintegration's Per Minute (DPM):** Refers to the number of nuclear transformations occurring per minute.

**Document:** Any written or pictorial information describing, defining, specifying, reporting or certifying activities, requirements, procedures or results (procedures are documents, a form generated because of this procedure is a record).

**Dose Equivalent:** Means the absorbed dose in rads or Gray in tissue multiplied by a quality factor and all other necessary modifying factors to account for the differing degrees of hazard from the various types of radiations (alpha, beta, gamma). The units for dose equivalent are the Sievert (Sv) and rem.

**Dose or Radiation Dose:** A generic term that means absorbed dose, dose equivalent, effective dose equivalent, committed dose equivalent, committed

effective dose equivalent, or total effective dose equivalent, as applicable to context.

**Dose Rate:** The quantity of dose delivered per unit of time.

**Dosimeter:** Any of several types of devices used to measure radiation dose. Common types include TLD, film, and pocket dosimeters.

**Dosimetry Processor:** An individual or organization that processes and evaluates individual monitoring equipment in order to determine the radiation dose delivered to the equipment.

**Effective Dose Equivalent (EDE):** The sum of the products of the dose equivalent to the organ or tissue ($H_T$) and the weighing factors ($w_T$) applicable to each of the body organs or tissues that are irradiated.

**Embryo/Fetus:** The developing human organism from conception until the time of birth.

**Estimated Dose:** Unofficial dose that is posted to an individual's radiation dose history. Estimated dose is normally based on results obtained from secondary dosimeters or incomplete bioassay information.

**Examination:** An evaluation device used to determine a trainee's competence in a given area. This is a summative device that is generally administered at the completion of a unit, course or program.

**Exposure:** Means being exposed to ionizing radiation or to radioactive material.

**Exposure (quantitative)**: A measure of the amount of ionization produced by x or gamma radiation in air (see roentgen).

**Exposure rate:** Amount of ionization produced by x or gamma radiation in air per unit time.

**External Dose:** That portion of the dose equivalent received from a source of radiation outside the body.

**Extremity:** Means hand, elbow, arm below the elbow, foot, knee, or leg below the knee.

**Eye (Lens) Dose Equivalent (LDE):** Dose equivalent due to external exposure to the lens of the eye. It is taken as the dose equivalent at a tissue depth of 0.3 cm (300 $mg/cm^2$).

**Fixed Contamination:** Contamination which is embedded, attached or otherwise not readily removed without surface destructive methods (e.g., grinding, sanding, acid baths).

**Frisk:** The performance of a direct survey for radioactive contamination.

**Frisker:** A radiation detection device used to check or "frisk" an individual or items for contamination. May be a hand-held instrument or a permanently mounted device.

**Gamma Ray (Gamma Radiation):** High-energy, short wavelength electromagnetic radiation (a packet of energy) emitted from the nucleus. Gamma radiation frequently accompanies alpha and beta emissions and always accompanies fission. Gamma rays are very penetrating and are best stopped or

shielded against by dense materials, such as lead or uranium. Gamma rays are similar to x-rays, but are usually more energetic.

**General Area Dose Rate:** A radiation dose rate measured at 30 cm or more from a surface.

**Half-Life:** The time required for a radioactive substance to lose 50% of its activity by decay. Each radionuclide has a unique half-life.

**High Radiation Area:** Any accessible area where the dose to an individual can exceed 100 mrem in any one (1) hour at 30 cm from the radiation source or from any surface that the radiation penetrates.

**In-Vitro Bioassay (indirect):** The estimation of radioactivity in the human body based upon:

(1) the measurement of radioactivity in excreta or other materials taken from the body; and,
(2) a biological model for the radionuclide movement in body tissues and organs. (ANSI N343-1978)

**Indirect Contamination Survey:** The method used to measure removable contamination. Indirect survey techniques are:

a) Smear Surveys - A smear is obtained by using an absorbent filter disk to wipe with moderate pressure across the area or item to be evaluated. A smear is usually wiped over an area of 100 $cm^2$.

b) Wipe Surveys - A wipe is obtained by wiping an absorbent pad or towel over a large area or the entire surface of the item being surveyed.

**Individual Monitoring:** The assessment of dose equivalent or committed effective dose equivalent to an individual through the use of commonly employed monitoring methods (e.g., TLD, OSL, bioassay, survey data).

**Individual Monitoring Devices:** Devices designed to be worn by a single individual for the assessment of dose equivalent. Examples include TLD's, OSLs, self reading pocket dosimeters chambers, and lapel air samplers.

**Inspection:** Examination or measurement to verify whether an item or activity conforms to specified requirements.

**Instrument:** A complete system designed to quantify one or more characteristics of ionizing radiation or radioactive material. (ANSI N42.17A-1989)

**Intake:** The amount of radioactive material taken into the body by inhalation, absorption through the skin, injection, ingestion, or through wounds. (NCRP 87 - 1987)

**Intake Retention Fraction:** The fraction of the intake that is retained in the body or organ at time (t) following the intake.

**Internal Deposition:** Radioactive material that has been taken into and deposited in the body through either inhalation, ingestion, absorption through the skin, or through wounds.

**Internal Dose:** That portion of the dose equivalent received from radioactive material taken into the body.

**Isotopes:** Nuclides having the same number of protons in their nuclei, but differing in the number of neutrons. Isotopes have the same atomic number and different mass numbers.

**Laboratory Standard:** An instrument, source, or other system or device calibrated by comparisons with a standard other than that of a U.S. National Standard. (ANSI N42.17A-1989)

**Lapel Sampler:** A portable battery operated air sample pump that is worn by an individual. The sample medium is connected to the pump via a flexible hose.

**Licensed Radioactive Material:** Source material, special nuclear material, or byproduct material received, possessed, used, transferred or disposed of under a general or specific license issued by the WDOH or NRC.

**License:** Means the radioactive materials license issued by the WDOH to a facility to possess and/or use radioactive materials. (Note: The Midnite Mine is not operated under a radioactive materials license. However, other permits may be issued to Midnite Mine by other state or federal agencies.

**Licensee:** The holder of a radioactive materials license.

**Limits (Dose Limits):** The permissible upper bounds of radiation doses.

**Low-Level Radioactive Waste (LLRW):** Those low-level radioactive wastes containing source, special nuclear, or by-product material that are acceptable for disposal in a land disposal facility. Low-level waste has the same meaning as in the Low-Level Waste Policy Act: that is, radioactive waste not classified as high-level radioactive waste, transuranic waste, spent nuclear fuel, or by product material as defined in Section 11e.(2) of the Atomic Energy Act (uranium or thorium tailings and waste). (WAC 246-249-010)

**Man-Hours:** The combined number of hours spent performing a task. For the purposes of this procedure, only the hours spent in areas where the workers are exposed to radiation are considered.

**Man-Rem:** The cumulative radiation dose equivalent received by personnel while performing a job or activity.

**Man-Rem Estimate:** An estimate of the cumulative dose that will be expended while performing a job or activity, from the start to the finish of that task, based on the expected dose rate in the work area, airborne radioactivity concentrations, the estimated time duration to complete the task, the expected scope of activities, and the historical dose information. The types of activities can also be a factor for calculating a man-rem estimate.

**Mass Number (Symbol A):** The mass of an atom relative to other atoms. The present basis for the scale of atomic weights is carbon the most common isotope of this element has arbitrarily been assigned an atomic weight of 12. The unit atomic mass is 1/12 the weight of the carbon-12 atom, or roughly the mass of one proton or one neutron. The atomic weight of any element is approximately equal to the total number of protons and neutrons in its nucleus.

**Mean Count:** The sum of all count values divided by the total number of counts taken. The mean is a statistical measure of central tendency, a value around which groups of counts tend to cluster.

**Member of the Public:** An individual who does not meet the definition of a worker. A worker is considered a member of the general public when not engaged in work for his or her employer.

**Micro:** A prefix meaning “one millionth” (1 E-06), as in microcurie.

**Milli:** A prefix meaning “one thousandth” (1 E-03), as in millirem, millirad, or millicurie.

**Minimum Detectable Activity:** The smallest activity of a radionuclide in a sample that will be detected with a beta probability of non-detectable (Type II) error while accepting an alpha probability of erroneously detecting that radionuclide in an appropriate blank sample. (Draft ANSI 13.30-1989)

**Minor:** An individual less than 18 years of age.

**Monitoring (Radiation Monitoring):** The measurement of radiation levels, concentrations, surface area concentrations, or quantities of radioactive material and the use of the results to evaluate potential exposures and doses.

**Nano:** A prefix meaning “one billionth” (1 E-09), as in nanocurie.

**National Standard:** An instrument, source, or other system or device maintained and promulgated by the U.S. National Institute of Standards and Technology (NIST formerly NBS). (ANSI N42.17A-1989)

**Non-Radiation Worker:** An individual who does not perform work in the controlled area of the Midnite Mine..

**Nonstochastic Effect:** Means health effects which vary in severity with dose and for which a threshold is believed to exist. Radiation induced cataract formation is an example of a nonstochastic effect.

**Nuclide:** Any one of the approximately 1800 isotopes of all the elements, whether radioactive or not. See radionuclide and isotope.

**Occupational Dose:** Means the radiation dose any individual receives in a controlled area (see below) and any other work-related radiation dose the person receives. Does not include medical dose, dose due to background radiation, or dose received while a member of the public.

**Occupational Dose Limit:** The maximum legally allowable dose to individuals during a specific time period, as defined by 10 CFR 20 and 29 CFR1910.1096.

**Optically Stimulated Luminiscent (OSL) Dosimeter:** Dosimeter used to measure gamma and beta radiation dose

**Organ Burden:** The quantity of a radionuclide present in an organ of the human body at a specified time. (ANSI N343-1978)

**Overexposure:** Means a radiation dose in excess of the allowed regulatory limit.

**Particulate:** Sometimes used to describe alpha and beta radiations, but most often used to mean dust, droplets, fumes, or mists containing radioactive material.

**Pico:** A prefix meaning “one trillionth” (1 E-12), as in picocurie.

**Personnel Monitoring Equipment (Individual monitoring devices):** Devices designed to be worn or carried by a single individual for the assessment of dose equivalent.

**Planned Special Exposure:** An infrequent exposure to radiation, separate from and in addition to the annual dose limits.

**Practical Quantification Limit**: (PQL) A level that is 3 to 5 times the detection level of a laboratory analysis (detection level is usually denoted as MDL-Minimum Detection Level, LLD-Lowest Limit of Detection, or similar terms, or the smallest amount that can be detected above the noise in a procedure and within the stated confidence interval).

**Protection Factor (PF):** The ratio of the ambient concentration of an airborne substance to the concentration of the substance inside the respirator at the breathing zone of the worker. The protection factor is a measure of the degree of protection provided by a respirator to the wearer. (ANSI Z88.2 - 1980)

**Protective Clothing:** Clothing provided to reduce exposure and prevent the spread of contamination to personnel, clothing, or the body while performing work with radioactive materials.

**Public Dose:** Dose received by a member of the public from exposure to radiation and radioactive material released by Midnite Mine Site, or to another source of radiation attributable to the operations of the Midnite Mine Water Treatment either within Site controlled area or in uncontrolled areas. Public dose does not include occupational dose or doses received from background radiation, as a patient from medical practices, or voluntary participation in medical research programs.

**Qualification:** Certification of the fact that an individual possesses the knowledge, capabilities (e.g., physical), characteristics, or abilities gained through experience, training, or on-the-job training and can perform the required task.

**Qualified Escort:** An individual that meets entry requirements commensurate with the area to be entered.

**Qualified Respirator User:** An individual who has successfully completed all requirements for the use of a respiratory protection device.

**Qualitative Respirator-Fitting Test:** A person wearing a respirator is exposed to an irritant smoke, an odorous vapor, or other suitable test agent. If the respirator wearer is unable to detect penetration of the test agent into the respirator, the respirator wearer has achieved a satisfactory fit with the respirator.

**Quality Factor (Q):** The modifying factor that is used to derive dose equivalent from absorbed dose.

**Quality Assurance Samples**:

Field Duplicate Samples - samples that have been divided into two or more portions at some step in the measurement process. Each portion is then carried through the remaining steps in the measurement process. An example of a field duplicate sample is a water sample that has been collected and poured into two sets of sample containers.

Equipment Rinsate Samples - samples that are obtained by collecting de-ionized water that has contacted the decontaminated sample collection equipment (e.g. bailer, pump, filter, etc.). These samples are then sent to the laboratory for analysis of the same parameters as the sample taken with the same equipment. These samples will be used to determine if decontamination procedures have been effective. Equipment rinsate samples may also be taken from decontaminated equipment planned for dedicated use, prior to use at the dedicated location.

Field Blank Samples - samples that are collected by pouring de-ionized water directly into the sample container. The blank will be analyzed for the same parameters as the samples that were collected or are associated with that blank.

Matrix Spike Samples - The laboratory will analyze the sample for the analyte being measured in other related samples within the sample delivery group. The laboratory will then add (spike) a known quantity of a specific analyte to the sample and reanalyze the sample for the spiked analyte. The percent recovery of the spiked analyte is determined and matrix interferences are evaluated. A sufficient quantity of sample will be collected to allow the laboratory to spike the sample for each analyte to be analyzed.

**Quantitative Respirator-Fitting Test:** A person wears a respirator in a test atmosphere containing a test agent in the form of an aerosol, vapor, or gas. Instrumentation samples the test atmosphere and the air inside the respiratory-inlet covering of the respirator and is used to measure quantitatively the penetration of the test agent into the respiratory-inlet covering.

**Rad:** The special unit of radiation dose. One rad is equal to an absorbed dose of 100 ergs/gram or 0.01 joule/kilogram (0.01 gray).

**Radiation (Ionizing Radiation):** Alpha particles, beta particles, gamma rays, x-rays, neutrons, high-speed electrons, high-speed protons, and other particles capable of producing ions. Radiation, as used within the context of the Radiation Protection Program does not include non-ionizing radiation such as radio or microwaves and visible, infrared, or ultraviolet light.

**Radiation Area:** Defined as any accessible area where the dose equivalent to an individual could exceed 5 mrem in any one hour at 30 cm from the radiation source or surface that radiation penetrates. The regulations require radiation area posting of all radiation areas.

**Radiation Safety Officer (RSO):** The health physicist responsible for development and oversight of radiation protection program policies at the Midnite Mine..

**Radiation Worker:** For the purpose of this SOP, an individual engaged in work at the Site or other activities associated with Phase I RD?RA.

**Radioactive Materials Area:** Any area or room which is posted for the purpose of protecting individuals against undue risks from exposure to licensed radioactive materials.

**Radionuclide:** Any one of the radioactive nuclides.

**Record:** A document that provides evidence of the quality of services performed, demonstrates that actions were performed in accordance with radiation protection procedures, or demonstrates conformance of actions to regulatory requirements.

**Reference Man:** A hypothetical aggregation of human physical and physiological characteristics arrived at by international consensus.

**Rem:** The special unit for any of the quantities expressed as dose equivalent. The dose equivalent in rems is equal to the absorbed dose in rads multiplied by the quality factor (1 rem = 0.01 Sievert).

**Removable Contamination:** A radioactive substance dispersed in materials or placed where it is undesirable. Also known as loose surface contamination. (ANSI N1.1 - 1976)

**Respirator:** Respiratory protective equipment provided for protection against inhalation of airborne particles. Half-face respirators, full-face respirators, and supplied air respirators are used when appropriate to provide needed protection.

**Respirator Sealing Tests:** To ensure proper protection, the wearer of a respirator equipped with a face piece shall check the seal of the face piece prior to each entry into a hazardous atmosphere. This may be done using procedures recommended by respirator manufacturers or by negative pressure or positive pressure seal tests.

**Response Time:** The time interval required for the instrument reading to change from 10% to 90% of the final reading (or vice versa) following a step change in the radiation field (i.e., signal) at the detector.

**Controlled Area:** Means an area having access controlled by Dawn Mining Company with the intent of preventing or controlling the radiation exposure of individuals. Controlled areas are those areas within the fenced area at Midnite Mine Site that require completion of specific training prior to entry and personal and vehicle surveys on exiting.

**Roentgen:** Means the special unit of exposure. One roentgen equals $2.58 \times 10^{-4}$ coulombs/kilogram of air.

**Shall:** Denotes a requirement.

**Shallow Dose Equivalent (SDE):** The dose equivalent at a tissue depth of 0.007cm (7mg/cm$^2$), averaged over an area of one square centimeter. It applies to external exposure of the skin of the whole body or of an extremity.

**Should:** Denotes a guideline - a suggested practice that is not mandatory in programs intended to comply with a standard.

**Sievert (Sv):** The SI unit of any of the quantities expressed as dose equivalent. The dose equivalent in Sieverts is equal to the absorbed dose in grays multiplied by the quality factor. One Sv equals 100 rem.

**Skin of the Whole Body:** The skin of the whole body, exclusive of skin of the extremities. (10 CFR 20.101 (a)) (Not defined in WAC 246)

**Radiation Work Permit (RWP):** A document which specifies the controls required for protection of workers while performing tasks involving radioactive

and/or hazardous materials. RWPs require specific training and acknowledgment of content prior to entry into areas covered by the RWP.

**Smearable Contamination:** Radioactive material which can easily be removed from a surface (e.g. soap and water, light brushing, wiping).

**Source Material:** Uranium or thorium, or any combination of uranium and thorium in any physical or chemical form; or ores which contain 0.05 percent by weight or more of uranium, thorium, or any combination thereof. Source material does not include special nuclear material.

**Stochastic Effects:** Health effects that occur randomly and for which the probability of the effect occurring, rather than its severity, is assumed to be a linear function of dose without threshold. Hereditary effects and cancer are examples of stochastic effects.

**Survey:** An evaluation of the radiological conditions and potential hazards incident to the production, use, transfer, release, disposal, or presence of radioactive materials or other sources of radiation. When appropriate, such an evaluation can include a physical survey or calculations of the radiation level, concentrations or quantities of radioactive material present.

**Thermoluminescent Dosimeter (TLD):** An integrating detector where radiation energy is absorbed (trapped) and can be read out later by thermal excitation of the detector. (ANSI N13.15-1985)

**Time Weighted Average (TWA):** Refers to the time weighted average concentration for a normal 8 hour workday and a 40 hour work week.

**Total Effective Dose Equivalent (TEDE):** The sum of the deep dose equivalent (for external exposures) and the committed effective dose equivalent (for internal exposures).

**Total Organ Dose Equivalent (TODE):** The sum of the deep dose equivalent and the committed dose equivalent to the organ receiving the highest dose.

**Uncontrolled Area:** Any area to which access is not limited or controlled for purposes of protection of individuals from exposure to radiation and radioactive materials. The uncontrolled area at the Site includes the area outside the WTP fence with the radiation warning signs.

**Uptake:** Quantity of a radionuclide taken up by the systematic circulation (e.g., by injection into the blood, by absorption from compartments in the respiratory or gastrointestinal tracts, or by absorption through the skin or through wounds in the skin). (NCRP 87-1987)

**Uranium (Natural, Depleted and Enriched):**

Natural Uranium: Uranium found in nature. Natural uranium contains 0.7 weight percent U-235, 99.3 weight percent U-238, and a trace of U-234.

Depleted Uranium: Uranium in which the U-235 isotope represents less than 0.7 weight percent of the mass of the material. Depleted uranium is less radioactive than natural uranium.

Enriched Uranium: Uranium in which the U-235 isotope represents greater than 0.7 weight percent of the mass of the material. The alpha emission rate increases from 1.5 E3 dpm per mg at 0.7 weight percent enrichment to 1.4 E5 dpm per mg at 93% enrichment.

**Visitor:** An escorted individual who enters the Controlled Area and who is not an employee or contractor of Dawn Mining Company at the Midnite Mine.

**Week:** Seven consecutive days starting on Sunday.

**Weighting Factor ($w_T$):** The proportion of risk of stochastic effects resulting from irradiation of the organ or tissue to the total risk of stochastic effects when the whole body is irradiated uniformly.

**Whole Body (WB):** Means, for purposes of whole body exposure, the head, trunk (including male gonads), arms above the elbow, or legs above the knee.

**Year:** The period of time beginning on January 1 that is used to determine compliance with the regulations.

**X-Ray:** Penetrating electromagnetic radiation having a wavelength much shorter than that of visible light. X-rays are usually produced by a excitation of the electron field around certain nuclei. In nuclear reactions, it is customary to refer to photons originating in the electron field of the atom as X-rays.

| MIDNITE MINE RA<br>RADIATION PROTECTION PROGRAM<br>STANDARD OPERATING PROCEDURES | RPP-SOP02<br>REVISION: 2 |
|---|---|
| LABORATORY SCALER/DETECTOR OPERATION | PAGE: 1 OF 8~~8~~<br>DATE: May, 2014 |

## ~~Approvals~~

~~This Midnite Mine Radiation Protection Program SOP has been reviewed and approved by the following:~~

| ~~Name~~ | ~~Title~~ | ~~Date~~ |
|---|---|---|
| | ~~Site General Manager~~ | |
| | ~~Site Operations Manager~~ | |
| | ~~Radiation Safety Officer~~ | |

# Table of Contents


**1. PURPOSE ..... 3**

**2. RESPONSIBILITY ..... 3**

2.1. RADIATION SAFETY OFFICER (RSO) ..... 3
2.2. RADIATION SAFETY TECHNICIAN (RST) ..... 3
2.3. INSTRUMENT USERS (OTHER THAN THE RST OR RSO) ..... 3

**3. PRECAUTIONS ..... 3**

3.1. RSO/RCT PRECAUTIONS ..... 3

**4. EQUIPMENT ..... 4**

**5. PROCEDURES ..... 4**

5.1. VOLTAGE PLATEAU DETERMINATION ..... 4
5.2. EFFICIENCY DETERMINATION ..... 4
5.3. CHI-SQUARE TESTS ..... 5
5.4. DAILY BACKGROUND COUNT RATE DETERMINATION AND RELIABILITY CHECKS ..... 6
5.5. INSTRUMENT CONTROL CHARTS ..... 6

**6. RECORDS ..... 6**

**7. REFERENCES AND BIBLIOGRAPHY ..... 7**

**8. ATTACHMENTS ..... 7**

## 1. PURPOSE

This procedure describes the requirements for use of laboratory scaler/detector apparatus for Midnite Mine Site samples. Scalers/detectors are used to support Health Physics activities pertaining to environmental monitoring, surveys, release of material and equipment for unrestricted use, and contamination control.

## 2. RESPONSIBILITY

### 2.1. Radiation Safety Officer (RSO)

- Responsible for apparatus oversight and use, and to ensure that all instruments in use are appropriately calibrated.
- Responsible for implementation of the requirements of this procedure.
- Responsible for approving records/documents in accordance with the Midnite Mine Remedial Action Project Quality Assurance Plan.
- Responsible for the training of all users of the counting apparatus.

### 2.2. Radiation Safety Technician (RST)

- Responsible for using and maintaining calibration of instruments, and generating and maintaining records in accordance with this procedure.
- Responsible for performing routine operational checks, and for notifying the RSO when operational checks fall outside acceptable ranges.

### 2.3. Instrument Users (other than the RST or RSO)

- Responsible for notifying the RST or the RSO when operational checks fall outside acceptable ranges.
- Responsible for notifying the RST or RSO when elevated sample activity is detected above established limits and/or criteria.

## 3. PRECAUTIONS

### 3.1. RSO/RCT Precautions

- Every effort should be taken to prevent contamination of the detector and to maintain a low background reading, especially when potentially high activity samples are counted. When high activity samples are counted, the instrument background shall be checked after use and at the discretion of the RST, and decontamination performed, as required.

- Detectors operate using a high voltage that can be hazardous. No attempt shall be made to perform any repairs on live circuits.

- Calibration, or operability checks, as appropriate, shall be performed when changes may have occurred due to potential damage, relocation of equipment, or repairs.

- Normal radiation protection principles will be followed (time, distance, and shielding) when handling radioactive sources and samples, to keep radiation doses ALARA.

- A warm-up time of at least 10 minutes shall be allowed at initial power-up for detector/electronics stabilization prior to counting/operability checks.

- Sources of radiation (e.g., samples, standards, ambient radon and progeny) within and outside the laboratory may interfere with counting results. Routine instrument background checks are required to ensure awareness of such sources.

## 4. EQUIPMENT

- Scaler/detector apparatus.

- Radioactive calibration and check sources.

- Manufacturer's operation manual for the instrument being used.

- Specialty gases for operation of the detector, as required.

## 5. PROCEDURES

### 5.1. Voltage Plateau Determination

- A voltage plateau determination shall be performed at least annually in accordance with the instrument manufacturer manual to determine the optimum operational voltage setting. Voltage plateaus shall also be performed whenever instrument repairs are performed that may affect operating voltage or when indicated as necessary by source check results.

### 5.2. Efficiency Determination

- Calibration standards used for instrument calibration checks shall be traceable to the National Institute of Standards and Technology (NIST). Check sources need not be NIST traceable, but should emit radiation of the same type or types as emitted by those sources used in instrument calibration unless:

1) The source geometry is well understood and reproduced; and,

2) The instrument response to the radiation is well understood and is not critically dependent on instrument adjustment.

- Reproducible source to detector geometries shall be established and used for all performance test adjustments. A geometry correction factor may need to be used for calibration of alpha and beta survey instrumentation to account for source to detector geometry. A sample self-absorption correction factor of 0.5 shall be applied to the efficiency for counting alpha particles in air samples taken with fibrous filters or smears when the instrument efficiency is determined using a plated standard. That is, the measured efficiency shall be multiplied by 0.5 to obtain the practical efficiency.

- Efficiency determinations should be performed prior to use, when the detector/scaler is used for counting but at least weekly.

- Efficiency determinations shall be for the types of radiation and geometries to be measured using appropriate NIST calibration standards.

- Background radiation during calibrations checks shall be low, known, and stable and shall be accounted for during calibration checks. Temperature, humidity, and atmospheric pressure readings shall be recorded at the time of calibration, if applicable.

- Instruments that may be malfunctioning, fail response tests, or require calibration shall be tagged out-of-service until repair/calibration is performed.

5.3. Chi-Square Tests

- Chi-square ($\chi^2$) tests shall be performed annually to determine that the equipment is operating correctly. The chi-square test should normally involve the collection of 21 individual counts for each source used.

- Calculate $\chi^2$ as follows:

$$\chi^2 = \frac{\Sigma(x - \bar{x})^2}{\bar{x}}$$

where: x = counts for the sample source or background
o x bar = the average of the counts

- Ensure that the chi-square ($\chi^2$) value indicated is within 2% and 98% probability (values of 9.591 to 34.170 for 21 individual counts). Upon review, chi-square values below the 9.591 value may be acceptable, but values above the 34.170 value are never acceptable.

An acceptable range will be determined annually for the background and source counts by determining the mean from the 21 counts taken for the Chi-square Test. The acceptable range will be ± 2 standard deviations from the mean.

5.4. Daily Background Count Rate Determination and Reliability Checks

- A background count rate and reliability check using a check source shall be performed daily, prior to use, when the detector/scaler is used for counting.

- Background count rates and source checks shall be graphed on a control chart.

- If the background or source check result exceeds a difference of 2s (2 sigma) from the mean (as shown on the Instrument Control Chart), re-count the background or source, log the results, and enter the new data on the QA control chart.

- Two successive background or source check counts outside the 2s control chart range indicates possible problems with the detector/electronics. Values between ± 2s of the mean net counts generally indicate normal operation of the instrument. Values outside the mean ± 2s will occur with a frequency of less than 5 percent. Values greater than 3s from the mean will occur with a frequency of less than one percent and should be investigated. Two consecutive measurements outside 3s indicate problems with equipment and shall require adjustments and/or repairs as necessary. The scaler shall be removed from service and immediate notification shall be made to the RSO or designee prior to counting any samples.

- Calibrations shall be checked whenever a significant change or repair is made to the measurement system, or when changes are detected as a result of check source measurements.

5.5. Instrument Control Charts

- Control charts shall be maintained to indicate instrument operability and/or malfunction problems on a daily basis when instruments are in use.

## 6. RECORDS

Records shall be maintained by the RSO documenting the results of the following instrument performance tests:

- Efficiency Determinations
- Chi-Square Tests
- Background Determinations/Reliability Checks
- Control Charts
- Calibration information including Voltage Plateau information, if required.

## 7. REFERENCES AND BIBLIOGRAPHY


Midnite Mine Remedial Action Quality Assurance Plan

Midnite Mine Remedial Action Project Radiation Protection Plan

ANSI N323-1978, “Radiation Protection Instrumentation, Test and Calibration”

Knoll, G.F., “Radiation Detection and Measurement”, 1978


## 8. ATTACHMENTS

Attachment 2-1 - Chi Square Calculation

**ATTACHMENT 2-1**
**CHI SQR CALCULATION**

Date _____ Source Type _____ Serial No _____

Scaler type _____ Source Strength (4□□ _____

Serial number _____

Chi sq. - Test is satisfactory if the chi sq. fall between 2 and 98 % probability

| number | source count |
|---|---|
| 1 | |
| 2 | |
| 3 | |
| 4 | |
| 5 | |
| 6 | |
| 7 | |
| 8 | |
| 9 | |
| 10 | |
| 11 | |
| 12 | |
| 13 | |
| 14 | |
| 15 | |
| 16 | |
| 17 | |
| 18 | |
| 19 | |
| 20 | |
| 21 | |

Efficiency(%) _____

| | |
|---|---|
| Average | |
| Std dev (s) | |
| Chi sq (□□²) | |
| 2% prob. □ ² | |
| 98% prob. □□² | |

Daily Source Count
Target cpm

| | |
|---|---|
| +3s | |
| +2s | |
| Avg. | |
| -2s | |
| -3s | |

Checked by: _____

Reviewed by: _____

## ~~Approvals~~

~~This Midnite Mine Radiation Protection Program SOP has been reviewed and approved by the following:~~

| ~~Name~~ | ~~Title~~ | ~~Date~~ |
|---|---|---|
| | ~~Site General Manager~~ | |
| | ~~Site Operations Manager~~ | |
| | ~~Radiation Safety Officer~~ | |

# Table of Contents


**1. PURPOSE ..... 3**

**2. RESPONSIBILITY ..... 3**

2.1. COMPANY RADIATION SAFETY OFFICER IS RESPONSIBLE FOR: ..... 3
2.2. COMPANY RADIATION SAFETY TECHNICIAN IS RESPONSIBLE FOR: ..... 3
2.3. ALL EMPLOYEES ARE RESPONSIBLE FOR: ..... 4
2.4. WOMAN OF CHILD BEARING AGE ..... 4

**3. PRECAUTIONS ..... 4**

**4. EQUIPMENT AND MATERIALS ..... 4**

**5. PROCEDURE ..... 4**

5.1. BIOASSAY MONITORING ..... 4
5.2. SPECIFIC INSTRUCTIONS FOR THE BIOASSAY (URINALYSIS) PROGRAM: ..... 5
5.3. EVALUATION OF BIOASSAY RESULTS ..... 6

**6. BREATHING ZONE SAMPLES ..... 6**

6.1. BREATHING ZONE DEFINITION ..... 6
6.2. BREATHING ZONE SAMPLES ..... 7
6.3. USE OF LAPEL AIR SAMPLING PUMPS TO OBTAIN BZ SAMPLES: ..... 7
6.4. EVALUATION OF BREATHING ZONE AIR SAMPLING RESULTS ..... 7

**7. SPECIAL REQUIREMENTS FOR DECLARED PREGNANT WOMEN (DPW) AND THE EMBRYO/FETUS ..... 8**

**8. DETERMINING THE AMOUNT OF INTAKE ..... 8**

8.1. INTAKE CALCULATION ..... 8
8.2. INFORMATION REQUESTED FOR INTAKE ..... 8
8.3. DETERMINING FREQUENCY OF FOLLOW-UP BIOASSAY ..... 9

**9. RECORDS ..... 9**

9.1. AIR SAMPLING RESULTS ..... 9
9.2. RECORDS OF EVALUATIONS ..... 9

**10. REFERENCES AND BIBLIOGRAPHY ..... 9**

**11. ATTACHMENTS ..... 10**

## 1. PURPOSE

This procedure describes internal monitoring requirements, methods, evaluation criteria, and calculations necessary to determine intakes and doses for workers at the Midnite Mine Site.

## 2. RESPONSIBILITY

2.1. Company Radiation Safety Officer ~~(RSO)~~ is responsible for:

- Internal dose assessments based on air sampling and/or bioassay (urinalysis) results.
- Oversight and for ensuring that the air sampling program provides representative samples of the work area, personnel breathing air, and the environment, as applicable, to allow for the identification and evaluation of potential intake of radioactive materials.
  - ♦ Authorizing sampling methods and instrumentation to be used for collection and analysis of samples.
- Implementation of the exposure monitoring program.
- Developing the methodology for performing dose calculations.
- Investigating doses exceeding regulatory limits, including documentation of results of investigations.
- Review and approval of personnel exposure data prior to entering such data into official worker exposure files.

2.2. Company Radiation Safety Technician is responsible for:

- Providing bioassay (urinalysis) kits to workers for collection of routine bioassay samples and special samples as required by the Company Radiation Safety Officer~~RSO~~.
- Collecting and submitting samples to the laboratory for analysis.
- Notifying the Company Radiation Safety Officer~~RSO~~ when the bioassay results are received from the lab.
- Notifying employees and the Company Radiation Safety Officer~~RSO~~ when a repeat / followup sample is necessary.
- Issuance of breathing zone / lapel samplers to employees as directed by the Company Radiation Safety Officer~~RSO~~.

- Informing the Company Radiation Safety Officer~~RSO~~ when airborne radioactivity levels have increased unexpectedly.

- Collection of breathing zone / lapel samplers and associated air filters at the end of work shifts and in accordance with this procedure.

2.3. All Employees are responsible for:

- Notifying the Company Radiation Safety Officer~~RSO~~ when medical treatments involving radionuclides have been received.

- Supplying bioassay samples when requested in a timely manner.

- Collecting bioassay samples in accordance with instructions designed to prevent cross contamination and to ensure representativeness of results.

- Using assigned breathing zone / lapel samplers in accordance with instructions provided by the and per this procedure.

2.4. Woman of Child Bearing Age

- Responsible to declare her pregnancy and the estimated date of conception to the Company Radiation Safety Officer~~RSO~~ in writing if she desires to be considered a "Declared Pregnant Worker" for the purpose of application of radiation protection related limits and/or work restrictions.

## 3. PRECAUTIONS

Personnel shall ensure that they are externally free of radioactive contamination that could contaminate the sample prior to bioassay sampling.

## 4. EQUIPMENT AND MATERIALS

- Breathing air sampler
- Lapel sampler
- Filter papers
- Bioassay sampling kit.

## 5. PROCEDURE

5.1. Bioassay Monitoring

- Baseline urine bioassays will be required for all company employees and contractors or subcontractors prior to working within controlled areas at the site, and an attempt will be made to obtain a final urine bioassay from these personnel upon termination of employment at the site. These samples will be analyzed for total uranium. .~~As may be required by the RSO in under unusual circumstances of potential intake of radioactive material, the general requirements for internal exposure monitoring (bioassay, primarily via urinalysis) shall be performed as~~

~~follows.~~ General guidance for uranium bioassay programs is provided in USNRC Regulatory Guide 8.22, “Bioassay at Uranium Mills”. 1988.

- Because the material to which RA workers will be exposed is ore type materials and/or precipitated sludges exposed to environmental conditions (e.g., oxidation) for many years, it is assumed for the purposes of internal dosimetry that such materials will be relatively insoluble (Solubility Class Y per USNRC 10CFR20 Appendix B).

- At the discretion of the Company Radiation Safety Officer, additional~~RSO~~ bioassay sampling may be performed if~~whenever~~ it is suspected that an employee may have received an inhalation exposure of > 10% of the ore dust DAC of 6 E-11 µCi/ml (USNRC 10CFR20, Appendix B) based on air sampling results, accident conditions, equipment failure, personal contamination, or other conditions. ~~Bioassays shall be performed if workers are exposed to an average ore dust concentration of 1E-10 µCi/ml based on gross alpha activity for a period of one calendar quarter.~~

- In the highly unlikely event of several consecutive high bioassay sample results for a given individual (e.g. each > 35 µg/L), an additional urine sample will be tested for indications of excess protein in the urine (albuminuria) along with a recommendation that the individual seek a medical professional for interpretation of the results and any medical advising.

- If~~When~~ respiratory protection equipment is required, bioassay sampling shall be performed to verify the effectiveness of the respirators. Respiratory equipment will be internally swiped to determine if leakage may have occurred (See RPP SOP8 – Respiratory Protection).

- ~~Bioassay sampling shall be performed whenever it is likely that an individual may have received an intake of 10 milligrams of soluble uranium in any one week (e.g. 1.4 E-10 µCi/ml for 40 hour week). However, since the material to which employees are exposed is ore type materials and /or precipitated sludges exposed to environmental conditions (e.g., oxidation) for many years, it is assumed to be relatively insoluble (e.g., USNRC 10CFR20, Appendix B Solubility Class Y)~~

- ~~Other bioassay sample types and analyses (e.g., nose wipes, saliva, fecal sampling, in-vivo lung counting, etc.) shall be obtained for known or severe suspected intakes as directed by the RSO.~~

- ~~All employees shall provide a “pre-employment / baseline” urinalysis sample prior to entering any project controlled area and a “termination” sample prior to being provided their final paycheck. These samples will be analyzed for total uranium and for the biomarkers associated with potential renal injury (e.g., glucose, lactate dehydrogenase (LDH) and/or protein albumen).~~

5.2. Specific Instructions for the Bioassay (urinalysis) program:

- Urine specimens for analysis of uranium compounds should usually be collected at least 36 hours, but preferably 48 to 96 hours, after the most recent occupancy in any area where there is a potential for exposure to airborne uranium. Normally, this collection will take place on the day following a weekend or time off period when the worker has not had any plant occupancy.

- Specimens should be collected prior to entering or performing any work in ~~WTP~~ controlled areas. Preferably the sample should be collected after the individual has showered at home.

- Sample kits or containers will be provided by the Company Radiation Safety Technician~~RST~~ or his designee.

- Bioassay Sample Collection:

  - ♦ Sampling should be performed in accordance with Attachment 3-1 and the sample should be returned to the Company Radiation Safety Technician~~RST~~.

  - ♦ The Company Radiation Safety Technician~~The RST~~ or his designee shall ensure that the sample bottle is marked with the individual's name and date, and that the container lid is tightly closed and sealed.

  - ♦ The samples should then be shipped to the laboratory for analysis and accompanied by a completed Chain of Custody form.

5.3. Evaluation of Bioassay Results

- The Company Radiation Safety Officer~~RSO~~ or designee shall initiate a Dose Investigation Report (See RPP-SOP10~~-SOP-10~~, Attachment 10~~-~~-1~~-3~~) if there is a positive urinalysis for uranium or if~~the~~ need for an evaluation of a potential unusual~~an~~ internal intake~~deposition~~ has otherwise been identified.

- The Dose Investigation Report serves as a cover sheet for all supporting information that may be gathered during the evaluation of an internal deposition.

- Final dose assignments (if applicable) shall be made on the Dose Investigation Report. Any assumptions made during the calculation of exposure assignments should be shown on the Internal Dose Evaluation Report or the attachments.

- The employee shall be notified by the Company Radiation Safety Officer~~RSO~~ of the results of the investigation and the associated dose assessment including implications and risks associated with the exposure.

## 6. Breathing Zone Samples

6.1. Breathing Zone Definition

- The breathing zone of a worker is taken to mean the air that is representative of the worker's inhaled air, i.e., in vicinity of nose and mouth. Breathing zone air samples (BZ samples) are taken:

    - To estimate personnel exposures to airborne activity associated with specific tasks.
    - To monitor tasks which present the potential to cause airborne activity.
    - When personnel wear respiratory protection devices.
    - During work activities that may cause airborne radioactivity of greater than 10~~25~~ % of a Derived Air Concentration (DAC).
    - When considerable loose surface activity is expected in an area.

6.2. Breathing Zone Samples

- BZ samples may be collected using a low or high volume air sampler or a lapel air sample, provided they are representative of the breathing zone and sufficient air volume collection can be obtained to identify airborne concentrations > 10% of the DAC.

6.3. Use of Lapel Air Sampling Pumps to obtain BZ Samples:

- Attach the sample head to the worker's collar or chest area with the filter head facing forwards. Instruct the worker to use care not to touch the filter during work.
- Position the sampler head as close to the worker's breathing zone as possible without interfering with his/her ability to safely accomplish the work in progress.
- Secure the pump in a manner that does not interfere with the worker's movement.
- Start pump within a few minutes prior to worker entering the area.
- At the start of an air sample, record flow rate, date and time.
- Stop the pump within 5 to 10 minutes of the worker exiting the area.
- Remove the sample filter(s) from the filter holder(s). Use caution not to cross-contaminate the filter(s). Record the stop time and date.
- Place the filter paper in the appropriate container.
- Analyze the air sample in accordance with RPP-SOP2~~SOP02~~.

6.4. Evaluation of Breathing Zone Air Sampling Results

- The Company Radiation Safety Officer will be immediately notified in the event of any BZ sampling result in excess of 10% of the DAC for ore dust based on gross alpha counting results.

- The Company Radiation Safety Officer will perform a special dose assessment in the event of any BZ sampling result in excess of 10% of the DAC for ore dust. Respective Dose~~The RSO or designee shall initiate and prepare Dose Investigation Report (See RPP-SOP-10, Attachment 10-1) if the need for an evaluation of an internal deposition has been identified.~~

- ~~Final dose~~ assignments (if applicable) shall be made on the Dose Investigation Report with any calculations or related assessments attached. ~~-~~Any assumptions made during the calculation of exposure assignments should be shown on the Internal Dose Evaluation Report or the attachments.

- The employee shall be notified by the Company Radiation Safety Officer~~RSO~~ of the results of the investigation and the associated dose assessment including implications and risks associated with the exposure.

## 7. Special Requirements for Declared Pregnant Women (DPW) and the Embryo/Fetus

If the DPW has ever had occupational internal exposure at Midnite Mine (positive bioassay results or known intakes), the estimated dose from any residual radionuclide body burden should be calculated.

The amount of occupational exposure, if any, received at other facilities between the dates of conception and declaration based on NRC Forms 4 and 5 (or equivalent) for the DPW should be determined. If the conception date falls in the middle of an exposure period and it cannot be determined how much dose was received before conception, assume that the dose was received at a uniform rate and prorate the dose to the embryo/fetus.

- The remaining dose permitted during the term of pregnancy should then be determined by subtracting the total effective dose equivalent to date from 500 mrem.

- If the dose to the embryo/fetus exceeds or is within 50 mrem of the dose limit at the time the pregnancy is declared, the embryo/fetus may be allowed to receive up to an additional 50 mrem maximum during the remainder of the pregnancy.

## 8. Determining the Amount of Intake

### 8.1. Intake Calculation

Intakes shall normally be calculated based upon the results of the air monitoring program, unless in the Company Radiation Safety Officer's~~RSO's~~ judgment, bioassay results are considered more representative of the actual intake. NOTE: Airborne uranium at the Midnite Mine is assumed to be solubility / clearance Class Y (ICRP 30; USNRC Regulatory Guide 8.22 and USNRC NUREG 0874) unless otherwise determined by the Company Radiation Safety Officer.~~RSO.~~ Use of any other solubility / clearance class will be documented by the Company Radiation Safety Officer~~RSO~~ with justification.

### 8.2. Information Requested for Intake

The following information regarding the suspected intake shall be collected if possible:

Time of the initial intake (use the actual event time, RWP access time, personnel estimation of time based on recollection of activities, the individual's work schedule, facility operations data, or historical air monitoring data.) When information is insufficient to determine the time of intake, it is acceptable to initially assume that the intake occurred at the mid-point of the time period since the last bioassay measurement.

The amount of time that has passed since the intake.

The inhalation class of the uranium (use Class Y unless the Company Radiation Safety Officer~~RSO~~ has justified otherwise – see above)

DAC-hours committed to the individual which may then be converted to dose (See RPP-SOP10). DAC-hours are calculated by determining the concentration of radionuclides in the air inhaled by the individual, multiplied by the amount of time, in hours, divided by the DAC in uCi/mL, resulting in DAC-hours. Use RPP-SOP10 to document dose.

8.3. Determining Frequency of Follow-up Bioassay

Follow-up to confirmed positive bioassay results regarding action levels, actions and the frequency and number of subsequent bioassays should be based on the recommendations of USNRC Regulatory Guide 8.22 and NUREG 0874.

## 9. RECORDS

9.1. Air Sampling Results

Records of air sampling results that have been used to assess intake and of bioassay monitoring shall be maintained by the Company Radiation Safety Officer~~RSO~~.

9.2. Records of Evaluations

Records of evaluations, individual dose assessments and assignments and notifications to employees shall be maintained in the dosimetry files by the Company Radiation Safety Officer.~~RSO.~~ When a record pertains to a specific individual, a copy of the record shall be placed into the individual's dosimetry file.

## 10. REFERENCES AND BIBLIOGRAPHY

U.S. NRC Regulatory Guide 8.11, "Applications of Bioassay for Uranium".

U.S. NRC Regulatory Guide 8.34, "Monitoring Criteria and Methods to Calculate Occupational Radiation Doses".

U.S. NRC Regulatory Guide 8.13, Instruction Concerning Prenatal Radiation Exposure.

U.S. NRC Regulatory Guide 8.36, "Radiation Dose to the Embryo/Fetus".

ANSI N13.30-1989 (Draft) “American National Standard for Performance Criteria for Radiobioassay”.

NUREG/CR-4884, "Interpretation of Bioassay Measurements".

EPA 520/1-8-020 (Federal Guidance Report No. 11), "Limiting Values of Radionuclide Intake and Air Concentration and Dose Conversion Factors for Inhalation, Submersion, and Ingestion".

U.S. NRC Regulatory Guide 8.9, “Acceptable Concepts, Models, Equations, and Assumptions for a Bioassay Program”.

U.S. NRC Regulatory Guide 8.22, “Bioassay at Uranium Mills”. 1988

NUREG 0874, “Internal Dosimetry Models for Applications of Bioassay at Uranium Mills”

Midnite Mine Radiation Protection Plan.

Midnite Mine Quality Assurance Plan.

## 11. ATTACHMENTS

Attachment 3-1 - Bioassay Sample Instructions

**ATTACHMENT 3-1**
**BIOASSAY SAMPLE INSTRUCTIONS**

**PLEASE FOLLOW THESE INSTRUCTIONS FOR BIOASSAY SAMPLING**

1. WRITE YOUR NAME AND SAMPLE DATE WITH PERMANENT MARKER ON THE BOTTLE.

2. BE SURE TO WASH HANDS FIRST, SO AS NOT TO CONTAMINATE BIOASSAY SAMPLES. FILL THE BOTTLE AWAY FROM THE WTP CONTROLLED AREA.

3. FILL BOTTLE TO AT LEAST HALF FULL (250ml).

4. CLOSE THE CONTAINER TIGHTLY.

5. TAPE THE LID ON.

6. AFTER SAMPLE IS COMPLETED, DELIVER SAMPLE TO RADIATION SAFETY TECHNICIAN FOR SHIPMENT.

| MIDNITE MINE RA<br>RADIATION PROTECTION PROGRAM<br>STANDARD OPERATING PROCEDURES | **RPP-SOP04**<br>**REVISION: 2** |
|---|---|
| **GENERAL SURVEY METER OPERATIONS AND CONTAMINATION SURVEYS** | **PAGE: 1 OF 12**<br>**DATE: May, 2014** |

## ~~Approvals~~

~~This Midnite Mine Radiation Protection Program SOP has been reviewed and approved by the following:~~

| ~~Name~~ | ~~Title~~ | ~~Date~~ |
|---|---|---|
| | ~~Site General Manager~~ | |
| | ~~Site Operations Manager~~ | |
| | ~~Radiation Safety Officer~~ | |

# Table of Contents


**1. PURPOSE ..... 3**

**2. RESPONSIBILITY ..... 3**

2.1. RADIATION SAFETY OFFICER ..... 3
2.2. RADIATION SAFETY TECHNICIAN ..... 3
2.3. WORKER RESPONSIBILITIES ..... 4

**3. EQUIPMENT AND MATERIALS ..... 4**

**4. PROCEDURE ..... 4**

4.1. GENERAL ..... 4
4.2. ROUTINE SURVEYS ..... 5
4.3. EXPOSURE RATE SURVEYS ..... 6
4.4. CONTAMINATION SURVEYS ..... 6
4.5. EQUIPMENT/VEHICLE SCREENING FOR UNCONTROLLED RELEASE ..... 8
4.6. PORTABLE RADIATION SURVEY INSTRUMENT CALIBRATION: ..... 8

**5. PRECAUTIONS ..... 9**

5.1. GENERAL PRECAUTIONS ..... 9

**6. RECORDS ..... 9**

6.1. SURVEY RECORDS ..... 9

**7. REFERENCES AND BIBLIOGRAPHY ..... 10**

**8. ATTACHMENTS ..... 10**

## 1. PURPOSE

This procedure provides the requirements for performance of radiological surveys, including routine exposure rate and contamination surveys, survey techniques, personnel contamination monitoring, unconditional release limits, and instrument calibration requirements.

## 2. RESPONSIBILITY

### 2.1. Radiation Safety Officer

Radiation Safety Officer (RSO) is responsible for:

- Oversight, development, and implementation of this procedure.
- Ensuring that radiological surveys provide representative radiological characterizations of work areas to allow for the identification and evaluation and minimization of potential radiological hazards.
- Ensuring that only trained and qualified personnel perform surveys and authorize the unconditional release of material and equipment.
- Communicating with management when non-routine or special surveys will be necessary prior to and/or during radiological related work.
- Authorizing survey methods and instrumentation to be used for surveys of areas, material and equipment.

### 2.2. Radiation Safety Technician

Radiation Safety Technician is responsible for:

- Informing the RSO when measurements of radiation, contamination or airborne radioactivity levels have are increasing.
- Conducting radiological surveys in accordance with this and related SOPs under the direction of the RSO.
- Verifying operability of selected instrumentation by ensuring that response and calibration checks have been performed prior to the use of selected instrumentation for radiological surveys.
- Preparing and submitting survey documentation to the RSO.
- Document control and record retention in accordance with the Midnite Quality Assurance and Radiation Protection Plans.

- Verifying that sufficient numbers of properly calibrated and operable instruments are available.

2.3. Worker Responsibilities

- Responsible for performing response checks and conducting personal contamination surveys in accordance with this procedure upon exiting controlled areas.

## 3. EQUIPMENT AND MATERIALS

Applicable survey meters, associated check sources, calibration standards and associated equipment and supplies for conduct of radiological surveys.

## 4. PROCEDURE

4.1. General

- Radiation surveys shall be performed based upon the radionuclides and types of radiation which workers are anticipated to encounter. For this project, the primary radiological hazards will be associated with external exposure to gamma and x-rays from uranium decay products (e.g. radium 226) and to a lesser degree internal exposure to natural uranium and its decay products associated with contamination and dusts.

- General area exposure rate surveys shall be used to assess the nominal radiation fields, to verify that radiological conditions have not changed, and to establish specific radiological controls for work to be performed.

- Contact exposure rate surveys may be used to locate and identify the maximum radiation levels to which personnel could be exposed as well as localized sources of radioactive materials which present unique radiological hazards.

- Contamination surveys shall be performed to detect and quantify radioactive contaminants known or likely to be present, and to determine whether radioactive material is embedded (fixed) in a surface or is smearable (loose-surface).These will include surveys of personnel prior to exiting controlled areas, surveys of areas to minimize potential for generating airborne radioactivity in dusts and surveys of selected equipment prior to release from controlled areas.

- Qualitative (large area) loose-surface contamination surveys will be performed to ensure that radioactive contamination has not been inadvertently spread.

- Daily, prior to use, all portable radiation detection instruments shall be checked with a source for consistency, and the results recorded on the Source Check Form (Attachment 4-1). The check shall be from at least one point using the same source as used for the reference reading. If readings vary 20% from the reference reading, the meter shall be removed from service, repaired, and re-calibrated as appropriate.

- Prior to each use of an instrument, the following checks shall be completed:
  - Physical Check (is it all there and in one piece);
  - Battery check (in the 'bat OK' section);
  - Background response check;
  - Calibration sticker check.

- The person documenting a survey shall notify the RSO and Supervisor whenever exposure rates greater than 500 uR/hr or alpha contamination levels greater than 1,000 dpm/100cm² are found.

4.2. Routine Surveys

- Surveys shall be conducted at a frequency commensurate with the hazards present and the personnel occupancies in a given area.

- Weekly, monthly or quarterly routine surveys and inspections shall be performed with the frequency based on exposure conditions an potential for conditions to change as determined by the RSO.

- Monthly surveys should be performed within the first full week of the month.

- Quarterly surveys should be performed within the first three weeks of January, April, July, and October, as applicable.

- Routine survey frequencies may be augmented under the direction of the RSO or RST when:

  - Unexpected exposure rates or contamination is found outside of the Controlled Area (e.g., inside vehicles).

  - Unexpected and/or significant increases in radiation levels, contamination levels or airborne radioactivity levels occur.

  - Maintenance activities or changes in work scope occur which may change radiological conditions (i.e., operations that may increase personnel dose rates, loose surface contamination, airborne radioactivity, etc.).

  - Changes to established survey frequencies shall require approval

from the RSO and shall be documented.

4.3. Exposure Rate Surveys

Gamma exposure rate surveys may be taken at the discretion of the RSO to determine the radiation fields present.

- Measure general area gamma exposure rates at waist level and at 30 cm (11.82 inches) or more from a source or the surface of nearby objects. Attachment 4-2 presents a recommended list of survey meters and probes. These make/models are provided as examples. These instruments or ones with similar capabilities and specifications will be used).

- Determine the source of radiation fields, when practical.

  - When necessary, ensure the survey instrument is not shielded by the body by rotating 180 degrees around the point being surveyed.

  - Measure exposure rates at the head, waist and feet level relative to the worker's position to radiation source(s).

  - Measure exposure rates overhead and underfoot where personnel may position themselves during work or inspections.

  - Observe for slight increases in instrument responses.

- Perform contact gamma exposure rate measurements with the detector within ½" of the surface to be surveyed.

- Measure the exposure rates at surfaces where radiation penetrates.

- Obtain an adequate number of measurements to provide a suitable representation of the dose rates over the entire area(s).

- Appropriate radiation surveys shall be performed:

  - In the work area(s) from which personnel have exited with unanticipated or unexpectedly high instrument responses.

  - In areas where equipment configuration changed or dose rates may have changed.

- Document the survey in accordance with Section 6.0.

4.4. Contamination Surveys

In general, routine area contamination surveys will be performed by the RST. Routine personal contamination surveys (scans) may be performed by the worker if he/she has been appropriately trained. All remedial action workers

including contractor employees will be instructed in personal contamination survey procedures during initial worker training and the annual refresher training. The RST will periodically "spot check" and observe workers surveying themselves out of the radiologically controlled area to be sure the surveys are being performed appropriately. Any detection of contamination on personnel or their effects (clothing. e.g.) shall be decontaminated (washed with water and soap if necessary) under the supervision of an RCT or the RSO.

Contamination surveys shall be performed on equipment and materials prior to being released from controlled areas to evaluate fixed and smearable activity over a surface area of 100 $cm^2$. The loose-surface contamination shall be quantified by wiping (smearing) approximately 100 $cm^2$ (approximately 16 square inches) of the surface. Wipe surveys will be conducted by the RST or RSO. Where the equipment meets the removable contamination release criteria based on a total contamination measurement, using a pancake probe or alpha survey meter, smears are not necessary.

- Conduct of Personnel Contamination Surveys:

    - Monitoring of personnel as they leave the radiation control areas or enter "clean" areas such as eating areas is necessary to prevent the spread of contamination and to reduce the possibility that individuals will inadvertently ingest radioactive materials. The goal for personal contamination is no activity detectable above background.

    - Contamination surveys will generally be performed with alpha survey meters (See examples in Attachment 4-2) because lower background levels allow easier discernment of contamination above background. However, at the direction of the RPO, beta/gamma surveys may also be conducted.

    - The monitoring will be performed by the individual with assistance and oversight as necessary by the RPO or his/her designee. Training in performing personal contamination surveys will be provided to all permanent employees as part of the employee safety training program and to contractors and temporary workers as required.

    - At the exit from a controlled area, personnel shall scan their feet, hands, and faces using the alpha detector. A minimum of 30 seconds is generally required to adequately survey each individual. Because of its low background count rate and low limits for contamination, personal alpha surveys should depend on audible detection of counts. The process should be used:

        - If residual radioactivity is not present above detectable levels (for specific instrument), the individual may exit the area. If monitoring indicates residual detectable radioactivity above background, the individual shall wash the contaminated

area and repeat the radiation survey. If the routine decontamination procedures and equipment will not remove the contamination, the individual shall contact the RCT or RSO who will consult RPP-SOP06.

- As the predominant radionuclide present at the Midnite Mine RA project is uranium and its decay products. In the interest of the ALARA philosophy, the goal ("limit") for personal contamination should be background. Detectable contamination of persons or their effects should be removed as soon as possible using simple water or water soap or mild detergent washes. If the contamination persists after two washes, contact the RCT or RSO. Do not use abrasive techniques that could damage the skin and provide a route of entry (potential for internal exposure) for the radioactive material.

4.5. Equipment/Vehicle Screening for Uncontrolled Release

- Equipment/vehicles leaving the Controlled Area shall be surveyed using a portable instrument that utilizes a standard pancake G-M probe. If levels greater than 100 counts per minute above background are detected, the vehicle shall be decontaminated (water wash) to levels below 100 counts per minute, or evaluated for loose surface contamination and fixed contamination. Alpha probes may be used at the discretion of the RSO.

- Uncontrolled release surveys shall consist of direct surveys (initially measuring both fixed and removable contamination to assess the gross residual surface contamination of the equipment being monitored. Where the equipment meets the removable contamination release criteria based on a total contamination measurement, using a pancake probe or alpha survey meter, smears are not necessary.

- If an item or material or equipment is determined to meet the uncontrolled release criteria, it shall be segregated in an area outside of the Controlled Area. If a container/area is utilized inside the Controlled Area, controls such as identifying the area with signs or labels must be in place to prevent the material from being re-contaminated, such as contaminated materials being placed in the container/area.

- Surface contamination levels of material to be released for uncontrolled use shall have gross alpha activity of less than 5,000 dpm/100cm$^2$ (average), 15,000 dpm/100cm$^2$ (maximum), and 1,000 dpm/100cm$^2$ (removable), as listed in Table 2 of U.S. NRC Regulatory Guide 8.30.

- Results of uncontrolled release survey(s) for surface contamination shall be documented in accordance with Section 7.0.

4.6. Portable Radiation Survey Instrument Calibration:

- When the instrument is returned from calibration, complete the source check and record the results as reference readings (Attachment 4-1).

- The instrument shall not be used if it is not operating properly or if the source response check differs from the reference reading by more than 20 percent. Instruments that fail the response or the battery check shall be tagged out of service.

- Instrument calibrations shall be performed in accordance with manufacturer's recommendations at intervals not to exceed 12 months or at shorter intervals as recommended by the manufacturer. Calibrations shall be performed using radioactive sources traceable to NIST or equivalent, as practical.

- Survey instruments shall be calibrated after repair, prior to use. However, "repair" does include battery, probe non-functioning accessory (e.g. handle), or cord replacement.

## 5. PRECAUTIONS

### 5.1. General Precautions

- Alpha surveys should be performed with the detector within 1/4 inch of the surface that is being monitored.

- Avoid contaminating the survey meter. If the individual performing the survey suspects that his/her hands are contaminated, he/she should handle the survey meter or detector with a paper towel or wipe or place the meter (not detector) in a small plastic bag. Do not handle the survey meter with a gloved hand unless the gloves are known to be clean.

## 6. RECORDS

### 6.1. Survey Records

- Surveys shall be documented in writing. The person performing the survey is responsible for the correct and accurate documentation of survey data.

- Surveys should be documented as they are being performed whenever possible in a clear and legible manner using black or blue ink.

- Indicate survey points or sample locations, as applicable, and record the associated measurements. Provide sufficient detail to adequately describe each specific area or item surveyed.

- Survey records shall include the type of survey performed (e.g., routine, weekly, RWP, etc.), name of person who performed the survey, date survey was performed, model number, serial number, and calibration due date for all instruments used to measure radiation levels or radioactive material concentrations, the specific location (area or room), component and equipment surveyed, the RWP number(s) if applicable, the results of survey measurements performed, and any remarks concerning radiological or non-radiological conditions (i.e. the presence of water, safety concerns, etc.) which may affect personnel exposure to radiation or radioactive material, as applicable.

- The person performing the survey shall sign the survey record.

- Routine personnel contamination surveys performed at the exit of controlled areas need only be document on the log used for this purpose located with the survey instrument at the exit location unless unusual evidence of contamination is detected for which the RCT or RSO must be contacted.

## 7. REFERENCES AND BIBLIOGRAPHY

U.S. NRC Regulatory Guide 8.30, “Health Physics Surveys in Uranium Mills”.

Midnite Mine Radiation Protection Plan.

Midnite Mine Quality Assurance Plan.

Midnite Mine Appendix S-Analytical Support and Verification Plan for Remediation of Surface Materials and Sediments Preliminary Design SOP06.

## 8. ATTACHMENTS

Attachment 4-1 - Example Source Check Form.

Attachment 4-2 - Recommended Radiological Survey Equipment List.

**ATTACHMENT 4-1**
**SOURCE CHECK FORM**

Meter: _____ Serial Number: _____

Calibration Due: _____ Probe Type: _____

Source A: _____ ser. # _____ Initial Reading: _____ + 20%_____ - 20%_____

Source B: _____ ser. # _____ Initial Reading: _____ + 20%_____ - 20% _____

| Date | Source A | Source B | Sat./Init. |
|---|---|---|---|
| | | | |
| | | | |
| | | | |
| | | | |
| | | | |
| | | | |
| | | | |
| | | | |
| | | | |
| | | | |
| | | | |
| | | | |
| | | | |
| | | | |
| | | | |
| | | | |
| | | | |
| | | | |
| | | | |
| | | | |
| | | | |
| | | | |
| | | | |
| | | | |
| | | | |
| | | | |

| Date | Source A | Source B | Sat./Init. |
|---|---|---|---|
| | | | |
| | | | |
| | | | |
| | | | |
| | | | |
| | | | |
| | | | |
| | | | |
| | | | |
| | | | |
| | | | |
| | | | |
| | | | |
| | | | |
| | | | |
| | | | |
| | | | |
| | | | |
| | | | |
| | | | |
| | | | |
| | | | |
| | | | |
| | | | |
| | | | |
| | | | |
| | | | |

## ~~Approvals~~

~~This Midnite Mine Radiation Protection Program SOP has been reviewed and approved by the following:~~

| ~~Name~~ | ~~Title~~ | ~~Date~~ |
| --- | --- | --- |
| | ~~Site General Manager~~ | |
| | ~~Site Operations Manager~~ | |
| | ~~Radiation Safety Officer~~ | |

# Table of Contents


**1. PURPOSE ..... 3**

**2. RESPONSIBILITY ..... 3**

2.1. RADIATION SAFETY OFFICER ..... 3
2.2. RADIATION SAFETY TECHNICIAN ..... 3

**3. PRECAUTIONS ..... 43**

**4. EQUIPMENT AND MATERIALS ..... 4**

**5. PROCEDURE ..... 4**

5.1. GENERAL ..... 4
5.2. GENERAL AREA AIR SAMPLES ..... 5
5.3. BREATHING ZONE (LAPEL) AIR SAMPLES ..... 5
5.4. USE OF LAPEL AIR SAMPLERS: ..... 6
5.5. GENERAL AIR AND ENVIRONMENTAL AIR SAMPLING ..... 6
5.6. ALPHA TRACK RADON MONITORING ..... 76
5.7. AIR SAMPLER CALIBRATION ..... 7
5.8. AIR FLOW CALIBRATOR ..... 87

**6. RECORDS ..... 87**

**7. REFERENCES AND BIBLIOGRAPHY ..... 8**

**8. ATTACHMENTS ..... 8**

## 1 PURPOSE

This procedure provides the requirements for performance of general area sampling and personnel air sampling in support of Midnite Mine Site operations.

## 2 RESPONSIBILITY

### 2.1 Radiation Safety Officer

Radiation Safety Officer (RSO) is responsible for:

- Oversight, development, maintenance, and implementation of this procedure.
- Ensuring that air samples provide representative samples of the work area and personnel breathing air, are representative of potential intake (inhalation) of radioactive materials by workers and airborne releases to the environment to allow for the identification and evaluation of potential radiological hazards.
- Authorizing sampling methods and instrumentation to be used for analysis of samples.

### 2.2 Radiation Safety Technician

Radiation Safety Technician is responsible for:

- Informing the RSO when airborne radioactivity levels have increased unexpectedly.
- Collection of air samples in accordance with this procedure.
- Preparation and analysis of samples counted on-site.
- Ensuring source checks have been performed prior to the use of instrumentation.
- Preparing and submitting survey documentation to the RSO for approval.
- Submittal of environmental samples to off-site laboratories, as required, using required quality control measures.
- Responsible for document control and record retention in accordance with the Midnite Mine Site Quality Assurance Program Plan (QAPP) and the Radiation Protection Plan (RPP).

## 3 PRECAUTIONS

N/A

## 4 EQUIPMENT AND MATERIALS

Air sampling and sample analysis equipment including pumps, filters, scalers and probes, and materials for documenting air sampling activities and results.

## 5 PROCEDURE

### 5.1 General

- Samples for airborne radioactivity shall be collected to monitor for and evaluate conditions that may result in potential internal personnel exposures (via inhalation).

- Air samples shall be collected where it is expected that the concentrations of airborne radioactivity may be in excess of background and therefore require monitoring to document potential for internal personnel exposures.

- A grab (e.g. high volume) air sample shall be collected when a significant increase in airborne radioactivity (dust generation, e.g.) is suspected as a result of work activities.

- Air sample collection media shall be appropriate to address the radionuclides present.

- The analysis of air samples (including preliminary field screening) shall be performed in a timely and expeditious manner.

- Air samples should be collected in airflow pathways downwind of sources of airborne radioactive material.

- Collect low or high volume air samples as follows:
    1. Orient the sample head horizontally or downwards to reduce the potential for collection of particles by gravity settling.
    2. Start the sample pump and record the location, time, date and current flow rate.
    3. The quantity of air sampled for general area and breathing zone samples should allow the Lower Limit of Detection (LLD) to be less than approximately 10% of the class Y Derived Air Concentration for ore dust (i.e., 6 E-11 uCi/ml- see 10 CFR 20, Appendix B).

4. At the completion of the sample collection, remove the sample filter(s) from the filter holder(s). Use caution not to cross-contaminate the filter(s). Record the location, stop time, date, current flow rate (for variable flow samplers), and printed name of the person who collected the sample.
5. Place the filter paper in the appropriate container. Mark the container with the following information: location, start and stop times and dates, start and end flow rates, and initials of the person who collected the sample.
6. Analyze the air sample in accordance with RPP-SOP02.
7. If a general area or job specific air sample indicates airborne radioactivity equal to, or greater than 10% DAC, follow-up with breathing zone and/or additional general area air samples, as applicable, collected to monitor airborne radioactivity concentrations as directed by the RSO.

5.2 General Area Air Samples

- General area air samples are taken to determine airborne concentrations where workers may be present and ensure airborne particulate concentrations to the public are below effluent concentration limits.

- Select sampling locations that are in the general air flow path and representative of conditions where workers are performing their jobs

- Position the sampler approximately 4 to 6 feet above the floor or ground.

- Orient the sampler head horizontally or downwards and 90° to any significant air flow direction.

- Collect a sample using high or low volume air sampling.

5.3 Breathing Zone (Lapel) Air Samples

The breathing zone of a worker is taken to mean the air that is representative of the worker's inhaled air, that is, the area around the nose and mouth..

- Breathing zone air samples are taken:
  - To estimate personnel exposures to airborne activity associated with specific tasks.
  - To monitor tasks which present the potential to cause airborne activity and therefore the potential for intake via inhalation.
  - Anytime personnel are required to wear respiratory protection devices.
  - During work activities that may cause airborne radioactivity of greater than 10% of a Derived Air Concentration (DAC).
  - When loose surface activity is expected to be excessive as determined by the RSO

.

- Position the sampler head as close to the worker's breathing zone as possible without interfering with the work in progress. Typical locations for lapel samplers are on shirt collar or having the sampling head attached to shirt in the chest area.

- Breathing zone air samples may be collected using a low or high volume air sampler or a lapel air sample, provided they are representative of the breathing zone and sufficient air volume collection is feasible.

5.4 Use of Lapel Air Samplers:

1. Attach the sample head to the worker's collar or chest area with the filter head facing horizontally. Instruct the worker to use care not to touch the filter during work.
2. Secure the pump in a manner that does not interfere with the worker's movement.
3. Start pump within a few minutes prior to worker entering the area.
4. At the start of an air sample, record flow rate, date and time.
5. Stop the pump within 5 to 10 minutes of the worker exiting the area.
6. Remove the sample filter(s) from the filter holder(s). Use caution not to cross-contaminate the filter(s). Record the stop time and date.
7. Place the filter paper in the appropriate container.
8. Analyze the air sample in accordance with RPP-SOP02.

5.5 General air and environmental Air Sampling

5.5.1 At the discretion of the RSO, air particulate, radon gas and/or radon progeny samples may need to be collected and analyzed in accordance with Environmental Air Sampling Requirements (Attachment 5-1).

5.5.2 Calibration of equipment shall be performed using radionuclide standards traceable to NIST to the extent practical.

5.5.3 Calibrations of air sample measuring equipment shall be performed at least semi-annually or at the manufacturer's recommended intervals, whichever is more frequent. The dry test meter is calibrated annually. In addition, equipment shall be recalibrated after repairs or whenever it is suspected that it is out of adjustment.

5.5.4 Laboratories performing analysis of environmental air samples shall comply with the requirements of U.S. NRC Regulatory Guide 4.15, "Quality Assurance for Radiological Monitoring Programs (Normal Operations)-Effluent Streams and the Environment."

5.5.5 The following information shall be recorded for each sample:

- Sample location
- Sample start and end dates
- Start and end flow rate
- Individual who performed sampling

5.6 Alpha track Radon Monitoring

5.6.1 Remove alpha track detector from the protective radon barrier casing in the field.

5.6.2 Record date, location, and detector number.

5.6.3 Allow the detector to remain in the field for the required time period.

5.6.4 Collect sample, place into the protective radon barrier casing, and record collection date, location, and detector number.

5.6.5 Ship samples to vendor for analysis.

5.7 Air Sampler Calibration

(General area high volume and lapel low volume sampling pumps)

5.7.1 Fixed Flow Samplers

5.7.1.1 Attach the air flow calibrator to the air sampler per the operating manual for the calibrator.

5.7.1.2 Record the temperature, pressure, and elevation of the sampler and calibrator.

5.7.1.3 Remove the cover for the air flow regulator and adjust the flow rate on the calibrator to read the flow rate required. Record the flow rates on Attachment 5-2 (Air Sampler Calibration Record).

5.7.1.4 This type of calibration does not allow the sampler to be used at any other flow rate.

5.7.1.5 Mark the air sampler with its flow rate and the calibration due date.

5.7.2 Variable Flow Air Samplers

5.7.2.1 Attach the air flow calibrator to the air sampler per the operating manual for the calibrator.

5.7.2.2 Remove the cover for the air flow regulator and adjust the flow rate on the calibrator to read in the center of the flow rate meter's scale. Adjust the flow rate meter to match the calibrator flow, if possible, at that flow. Lock the flow meter adjusting screw in place. Record the actual and indicated flow rates on Attachment 5-2.

5.7.2.3 Adjust the air sampler regulator to flow rates at approximately five evenly spaced increments of the flow meters range, as read on the air flow calibrator. Record the actual and indicated flow rates on Attachment 5-2.

5.7.2.4 Set the air sampler flow rate at 50 percent of meter range, or the flow that the meter is to be used.

5.7.2.5 Complete Attachment 5-2. Attach a copy of the graph from Attachment 5-2 on the air sampler.

5.8 Air flow calibrator

5.8.1 Air flow calibrator shall be calibrated to a NIST standard or equivalent annually.

## 6 RECORDS

- All records of air sampling and assessment of radionuclide concentrations in air shall be maintained in accordance with the Midnite Mine Quality Assurance Project Plan (QAPP) and the Radiation Protection Plan (RPP).
- Field notes shall be kept in field log books.
- Radon alpha track detectors and environmental air samples sent to an outside laboratory shall be accompanied by a Chain of Custody form as per the Midnite Mine QAPP.

## 7 REFERENCES AND BIBLIOGRAPHY

U.S. NRC Regulatory Guide 8.30, “Health Physics Surveys in Uranium Mills”

U.S. NRC Regulatory Guide 8.25, “Air Sampling in the Workplace”

U.S. NRC Regulatory Guide 4.14, “Radiological Effluent and Environmental Monitoring at Uranium Mills”

U.S. NRC Regulatory Guide 4.15, “Quality Assurance for Radiological Monitoring Programs (Normal Operations)-Effluent Streams and the Environment”

Midnite Mine Radiation Protection Plan and Standard Operating Procedures

Midnite Mine Quality Assurance Plan and Procedures

## 8 ATTACHMENTS

Attachment 5-1 - Midnite Mine Air Sampling Requirements

Attachment 5-2 - Air Sampler Calibration Record

**ATTACHMENT 5-1**
**MIDNITE MINE ENVIRONMENTAL AIR SAMPLING REQUIREMENTS**

## Radon Gas and Progeny

Environmental

Continuous passive radon gas sampling based on need and at locations to be identified by the RSO (exchanged monthly). These locations may change as work progresses.

## Air Particulate

Operational

Continuous general area sampling downwind of Controlled Areas will be conducted during operations when workers are present. Weekly composites will be analyzed monthly. Gross alpha measurements will be conducted per RPP-SOP02. These locations may change as work progresses.

Radon progeny sampling based on need and at work locations detremine by the RSO to monitor potential worker exposure

**ATTACHMENT 5-2**
**AIR SAMPLER CALIBRATION RECORD**

Flow Rate (liters per minute)

| Actual | Indicated |
|---|---|
| _____ | _____ |
| _____ | _____ |
| _____ | _____ |
| _____ | _____ |
| _____ | _____ |
| _____ | _____ |

Flow Calibrator
Type:_____
Serial #:_____
Cal Due Date:_____

Air Sampler Model Number/Serial Number_____

Date:_____
Cal due date:_____
Performed by:_____

Actual flow
Indicated flow

| | | | | | |
|---|---|---|---|---|---|
| | | | | | |
| | | | | | |
| | | | | | |
| | | | | | |
| | | | | | |
| | | | | | |
| | | | | | |
| | | | | | |

Atmospheric conditions _____°F
_____in of Hg
and elevation 1760 ft MSL

Comments_____
_____
_____
_____

RSO Review_____

## ~~Approvals~~

~~This Midnite Mine Radiation Protection Program SOP has been reviewed and approved by the following:~~

| ~~Name~~ | ~~Title~~ | ~~Date~~ |
|---|---|---|
| | ~~Site General Manager~~ | |
| | ~~Site Operations Manager~~ | |
| | ~~Radiation Safety Officer~~ | |

# Table of Contents


**1. PURPOSE ..... 3**

**2. RESPONSIBILITY ..... 3**

2.1. RADIATION SAFETY OFFICER (RSO) ..... 3
2.2. RADIATION SAFETY TECHNICIAN (RST) ..... 3
2.3. REMEDIAL ACTION WORKERS ..... 3

**3. PRECAUTIONS ..... 3**

3.1. GENERAL PRECAUTIONS ..... 3

**4. EQUIPMENT AND MATERIALS ..... 4**

**5. PROCEDURE ..... 4**

5.1. DECONTAMINATION (WASHING) METHODS: ..... 4
5.2. PERSONNEL DECONTAMINATION ..... 5
5.3. CONTAMINATED PERSONAL CLOTHING OR ARTICLES ..... 6
5.4. DECONTAMINATION OF ENVIRONMENTAL SAMPLING EQUIPMENT ..... 7
5.5. DECONTAMINATION OF HEAVY EQUIPMENT AND VEHICLES ..... 7

**6. RECORDS ..... 8**

6.1. PERSONNEL DECONTAMINATION ..... 8
6.2. ITEMS OR MATERIALS RELEASED FOR UNCONTROLLED USE ..... 8
6.3. EQUIPMENT DECONTAMINATION (NOT FOR OFF-SITE RELEASE) ..... 8

**7. REFERENCES AND BIBLIOGRAPHY ..... 8**

**8. ATTACHMENTS ..... 8**

## 1. PURPOSE

This procedure describes the standard methods for decontamination of personnel and any tools, vehicles and other materials prior to being removed from the controlled area at Midnite Mine. The ultimate selection of decontamination methods is dependent upon As Low as is Reasonably Achievable (ALARA) principles, economic and functional considerations, and waste minimization.

## 2. RESPONSIBILITY

2.1. Radiation Safety Officer (RSO)

- Responsible for developing and establishing decontamination procedures and ensuring compliance with all applicable regulations and requirements.
- Responsible for oversight of all decontamination activities at the Midnite Mine Remedial Action Project.

2.2. Radiation Safety Technician (RST)

- Responsible for document maintenance and storage.
- Responsible for training remedial action workers regarding this procedure and providing assistance to them as necessary during decontamination activities.

2.3. Remedial Action Workers

- Responsible for following this procedure.
- Responsible for performing surveys in accordance with RPP-SOP04, *Survey Meter / Contamination Surveys.*

## 3. PRECAUTIONS

3.1. General Precautions

- All instruments shall be properly calibrated in accordance with the requirements of RPP-SOP04, “General Survey Meter Operations”.
- Decontamination methods which generate excessive amounts of waste materials shall be used only after other methods, such as vacuuming, tape presses, sweeping, etc., have been attempted or considered.
- Decontamination should normally proceed from the area of lowest to highest concentration to limit the spread of contamination as much as is practicable.

- ♦ All decontamination activities shall be performed under the health and safety guidance of the RSO.

- ♦ Materials that are to be unconditionally released shall comply with the release limits and be documented in accordance with RPP-SOP04, “General Survey Meter Operations”.

- ♦ Material that cannot be unconditionally released shall be stored at the mine site for eventual disposal.

- ♦ Decontamination solutions to decontaminate should be limited to washing with water, soap and/or a mild detergent only. Use of any other reagents or methods require input from and oversight by the RSO.

- ♦ No decontamination approach shall be used on people that can potential abrade the skin resulting in potential for internalization of the contamination.

- ♦ In the event of severe contamination that cannot be removed without use of more aggressive reagents or methods, external (including) medical assistance may be necessary at they discretion of the RSO.

## 4. EQUIPMENT AND MATERIALS

- Survey instrumentation (See RPP-SOP4).
- Anti-contamination clothing, including respiratory protection equipment as required.
- Decontamination of equipment and materials, as required.
- Container(s) for waste materials generated due to decontamination activities as required.

## 5. PROCEDURE

There are a wide variety of surfaces, equipment and areas at Midnite Mine where decontamination may be required in order to reduce contamination levels to meet regulatory release limits or to maintain working levels ALARA. Each type of surface and specific equipment or area may require a variety of decontamination techniques. The selection of the decontamination method should be based upon minimizing the exposure to personnel, the efficiency and cost of the process, and the ALARA issues associated with such process. This procedure provides examples of common methods for decontamination at Midnite Mine.

5.1. Decontamination (Washing) methods:

- Decontamination using water is effective for most contamination likely to be present at the project site. Potentially contaminated water is retained in a sump and passed through the water treatment circuit.

- Vacuum cleaning is effective on dry, porous and non-porous surfaces for the removal of loose surface dust or particles. This technique eliminates the necessity for collection and absorption of liquids. However, all dust must be filtered out of the exhaust, which in turn contaminates the vacuum equipment.

- Decontamination using water can be effective for the control of airborne radioactivity on most surfaces, but can also result in the spread of contamination if care is not taken to control runoff of solutions.

- Detergents are effective on most non-porous surfaces. This technique can be very effective on oily or damp surfaces, but is not effective with porous surfaces.

- Decontamination solvents can be effective on oily surfaces. However, if not carefully controlled, contamination can be easily spread. In addition, a “mixed” hazardous/radioactive waste can be generated.

5.2. Personnel Decontamination

In the unusual circumstances that personal contamination is not easily removed by the worker using simple warm water / soap washing methods and several repeated washings do not reduce the contamination levels to “background”, the RST or RSO must be notified to supervise further decontamination efforts.

- First aid activities shall take priority over personnel decontamination activities.

- The following are general considerations to be observed during personnel decontamination activities:

  - Decontamination of wounds (other than minor cuts or abrasions) shall be performed by medical personnel.

  - The areas of contamination on an individual should be defined through proper monitoring techniques. Special emphasis should be placed on locating any hot spots on the individual.

  - The mildest methods of decontamination should be attempted first, progressing to more harsh methods when necessary. Cleansing methods, from the least to the most harsh are listed below:

    - Flushing with water
    - Soap and warm water
    - Mild abrasive soap, soft brush, and water
    - Detergent

- Use protective clothing (i.e. gloves, etc.) as necessary when decontaminating personnel in order to prevent the spread of contamination.

- Minor wounds (cuts, abrasions, etc.) can be flushed with lukewarm water or a saline solution, after notification of the RSO or designee.

- The RST should attend to contaminated personnel until the decontamination process has been completed or otherwise terminated. After decontamination, individuals should wash hair, hands, and fingernails thoroughly.

- Avoid spreading contamination to non-contaminated areas as much as practical.

- When decontamination activities are completed, instruct the individual to perform a whole body frisk (hands, feet, and clothing). Similar equipment to that which was used for the previous whole body frisk should be used, if available, for subsequent whole body frisking. The RSO must be notified of incidents that require decontamination supervision by the RST and the results of decontamination efforts.

- Perform follow-up surveys in areas where personnel decontamination has been conducted and where contaminated personnel may have spread contamination to non-contaminated areas.

- If an individual cannot be completely decontaminated, the RSO shall be notified and will determine all necessary precautions for the individual.

- The Personnel Decontamination Record (Attachment 6-1) shall be maintained along with other records that may have been generated to document any unusual decontamination events.

- At the discretion of the RSO, the RST will collect a bioassay sample from the contaminated individual in accordance with RPP-SOP03.

5.3. Contaminated Personal Clothing or Articles

- Work clothing (coveralls, etc.) will remain on site and be laundered for subsequent re-issue. However, other personal articles found to be contaminated with radioactive material above background shall be retained.

- Decontamination of personal articles may be performed by the individual under the direction of the RST in accordance with this procedure.

- Personal clothing or items may be released when surveys indicate that radioactive material is indistinguishable from background.

- Cautionary note: Radon decay products may adhere to clothing, particularly fleece materials, and give a false positive reading on scanning out. The article of clothing may be placed in a plastic bag and retained for several hours. If radon decay products are the cause of the elevated reading, the readings should return to background within about four hours.

5.4. Decontamination of Environmental Sampling Equipment

- Physically remove any gross contamination by scraping or wiping it off, if practical. Always proceed from the area with the least contamination to the area with the highest contamination. Rinse water is discharged at the sampling site or decontamination area. Cleaning materials shall be surveyed for contamination using the appropriate survey meter (e.g., alpha survey meter or alpha/beta/gamma GM pancake probe or equivalent) and released or, if necessary, decontaminated.

- For equipment that will not be damaged by moisture, remove any remaining contamination with a brush and distilled or de-ionized water solution containing alconox detergent, or equivalent.

- Equipment that may be damaged by water should be wiped clean using clean towels and detergent water (alconox or equivalent) or using a spray bottle with a towel moistened with distilled or de-ionized water.

    - **CAUTION: Use care to ensure that equipment is not damaged.**

- Place the equipment in a clean location or use appropriate controls to ensure it will not be contaminated while drying.

- Allow equipment to air dry, if practical, or dry with a clean, lint-free towel.

5.5. Decontamination of Heavy Equipment and Vehicles

- If necessary, trucks may be decontaminated in the truck shed. Water used for decontamination must be contained in the truck shed sump and re-routed through the water treatment plant circuit.

- Personnel performing decontamination shall wear appropriate safety equipment and clothing including hand, eye, foot, hearing, and body protection, as applicable to the job, particularly when using high pressure water sprays.

- Equipment with gross contamination should be scraped off with a flat bladed scraper at the sampling or construction site. Material removed shall remain at the site or decontamination area.

- Equipment such as drill rigs, auger, drill bits, and shovels should be sprayed with water (high pressure when required) then rinsed with clean water. Care should be taken to adequately clean hard to reach places on complicated pieces of machinery.

- After cleaning and sufficient drying of equipment has been completed, perform surveys to ensure that the equipment meets the criteria for additional use or release from the controlled area, as applicable.

- Perform additional decontamination as necessary until the appropriate release criteria are met (See RPP Section 3.3 and RPP-SOP4).

- Move materials to a clean area or establish controls to ensure that the equipment will remain clean for future use.

## 6. RECORDS

6.1. Personnel Decontamination

Records of personnel contamination (attachment 6-1) shall be maintained in accordance with the Midnite Mine Quality Assurance Project Plan and the Radiation Protection Plan.

6.2. Items or Materials Released for Uncontrolled Use

Records of items or materials that are released for uncontrolled use shall be maintained in accordance with the Midnite Mine Quality Assurance Project Plan, the Radiation Protection Plan and RPP-SOP04. Include initial and final levels of contamination and decontamination methods used, and record on the survey form.

6.3. Equipment Decontamination (not for off-site release)

Records of equipment decontamination for items and materials not to be released from the controlled area shall be maintained in field logs and on the survey form (RPP-SOP04)

## 7. REFERENCES AND BIBLIOGRAPHY

Midnite Mine Quality Assurance Project Plan and Procedures

Midnite Mine Radiation Protection Plan and Procedures

## 8. ATTACHMENTS

Attachment 6-1, “Personnel Decontamination Record”

**ATTACHMENT 6-1**
**PERSONNEL DECONTAMINATION RECORD**

Name:_____ SSN: last four digits_____

Description of Occurrence:
_____
_____
_____

Location DPM/Frisk

Instrument Data:

Type:_____
Serial #:_____
Cal. Due Date:_____

Type:_____
Serial #:_____
Cal. Due Date:_____

Type:_____
Serial #:_____
Cal. Due Date:_____

Mark areas contaminated on the drawings above and the levels found (in DPM/Frisk).

Decontamination Method(s) Used / Final Survey Results:
_____
_____
_

Dose
Assessment:_____
_____
Individual Signature/Date:_____
RSTSig_____Date:_____RSOSig./_____Date_____
__
Bioassay required _____yes _____no

## ~~Approvals~~

~~This Midnite Mine Radiation Protection Program SOP has been reviewed and approved by the following:~~

| ~~Name~~ | ~~Title~~ | ~~Date~~ |
|---|---|---|
| | ~~Site General Manager~~ | |
| | ~~Site Operations Manager~~ | |
| | ~~Radiation Safety Officer~~ | |

# Table of Contents

**1.0 PURPOSE** ..... **3**

**2.0 RESPONSIBILITY** ..... **3**

2.1. RADIATION SAFETY OFFICER (RSO) ..... 3
2.2. RADIATION SAFETY TECHNICIAN ..... 3
2.3. ALL EMPLOYEES ..... 3

**3.0 PRECAUTIONS** ..... **4**

**4.0 EQUIPMENT AND MATERIALS** ..... **4**

**5.0 PROCEDURE** ..... **4**

5.1. GENERAL REQUIREMENTS FOR EXTERNAL DOSIMETRY ISSUANCE ..... 4
5.2. INITIAL DOSIMETRY BADGE ISSUE ..... 5
5.3. DOSIMETRY CHANGE OUT ..... 5
5.4. TERMINATION/DEACTIVATION OF EMPLOYEES ..... 6
5.5. EMPLOYEE DOSE RECORDS ..... 7
5.6. LOST AND DAMAGED BADGES ..... 7

**6.0 RECORDS** ..... **7**

**7.0 REFERENCES AND BIBLIOGRAPHY** ..... **8**

**8.0 ATTACHMENTS** ..... **8**

## 1.0 PURPOSE

This procedure provides instructions for the routine issuing and use of radiation dosimetry devices, establishing and maintaining associated dose records, routine primary dosimetry exchange, and final termination of dosimetry. Regulatory and administrative exposure limits applicable to workers at the Midnite Mine RA project are presented in the project's Radiation Protection Plan Section 3.1.

## 2.0 RESPONSIBILITY

2.1. Radiation Safety Officer (RSO)

- Responsible for oversight of the Radiation Protection Program with respect to dose limits.
- Responsible for ensuring appropriate use of dosimetry.
- Responsible for providing the methodology for performing dose calculations including calculation of a "missed dose" when a dosimeter is lost or damaged.
- Responsible for review and approval of radiation exposure and dose data.
- Responsible for investigating if regulatory and/or administrative limits are exceeded, including documentation of such results.
- Responsible for required notifications and reports to workers and regulatory agencies.
- Responsible for maintaining dosimetry records.
- Responsible for ensuring that workers are restricted from activities that could result in additional exposure when administrative limits are exceeded.

2.2. Radiation Safety Technician

- Responsible for routine issue and change out of Personnel Dosimetry Devices.
- Responsible for reporting and replacing lost badges.
- Responsible for maintaining an appropriate inventory of dosimetry devices from the vendor.

2.3. All Employees

- Responsible for notifying the RSO when their physician has prescribed radionuclides for treatment or diagnostic purposes.
- Responsible for wearing assigned dosimetry in proper locations as required.
- Responsible for storing assigned monitoring devices in designated storage areas when not in use.

- Responsible for reporting off-scale, lost, damaged dosimetry, or unusual dosimetry readings to the RSO.

## 3.0 PRECAUTIONS

- Current year dose must be documented on a NRC Form 5 (See Attachment 7-1) or equivalent. This is a common form used to document exposure even if the project is not directly under NRC jurisdiction, but an equivalent alternative can be used. Documentation shall be a written signed statement from the individual, or from the individual's most recent employer. In addition, an attempt shall be made to document lifetime dose; however, a dosimeter (TLD or OSL) may be issued while awaiting lifetime dose history information requested from previous employers.
- Dosimetry devices should be adequately protected from physical abuse and harsh environments. Dosimeter holders shall not be tampered with or opened except by authorized personnel.
- Personnel radiation exposure records shall be protected from disclosure to individuals or organizations outside of Dawn Mining Company, without the written authorization of the individual. The exceptions are regulatory agencies for auditing purposes.
- Access to personnel radiation exposure history files shall be limited to health physics staff. Access by all other personnel requires specific authorization by the RSO and shall be granted only for legitimate business needs.

## 4.0 EQUIPMENT AND MATERIALS

- Dosimeters
  - Thermoluminescent Dosimeters (TLDs) or
  - Optically Stimulated Luminescent (OSL) dosimeters
- NRC Form 5 or equivalent (Attachment 7-1).

## 5.0 PROCEDURE

5.1. General Requirements for External Dosimetry Issuance

- Any individual who works at the Site for more than one week per year as a regular employee or contractor shall be subject to personal dosimetry using either a TLD or OSL dosimeters.
- The personal dosimetry badge shall be:
  - Capable of measuring the Deep Dose Equivalent (DDE) at a tissue depth of one centimeter.
  - Capable of measuring the Lens Dose Equivalent (LDE) at a tissue depth of 0.3 centimeter.
  - Capable of measuring the Shallow Dose Equivalent (SDE) at a tissue depth of 0.007 centimeter.
- External exposure monitoring is required for visitors to the Midnite Mine. Personal dosimeters will be issued and visitor training conducted by the RSO. Midnite Mine employees or contractors working anywhere on the mine site for periods greater than one week per year will be issued TLD

or OSL badges and will be trained in accordance with the requirements of the Radiation Protection Plan Section 2.4 and RPP SOP 11.

- The purpose of the personnel dosimeter (TLD or OSL badge) is to determine the accumulated dose of the individual over a period of time for official dose records. All personnel dosimeters shall be processed at least quarterly. Dosimeters may be read more often at the discretion of the RSO.
- Personnel monitoring equipment shall be placed as follows:
- At the location on the body expected to be represented of whole body exposure, typically on the upper torso.
- Exposure conditions at the Midnite Mine RA project are expected to involve relatively uniform whole body dose (DDE), the dosimeter shall be worn on the front of the body between the neck and waist.

5.2. Initial Dosimetry Badge Issue

- The RSO will make arrangements thru an approved and accredited dosimeter service (e.g., by NVLAP) to establish a standing order of quarterly dosimeters assigned by name to all full time project employees including extra unassigned dosimeters (for new employees until added to dosimetry roster, for visitors, etc.).
- The RSO will inspect new dosimeters when received to ensure they have all filters and windows in place, and that shows no apparent signs of external damage.
- If not already done so by the vendor, label the dosimeter with the individual's name or identification number. Record assignments on the Dosimeter Issue Form (See Attachment 7-2) so there is a permanent record linking specific dosimeters and individuals and date of issuance.
- Ensure that the individual is trained in accordance with RPP-SOP11 (Training).
- Return the transit dosimeter to the vendor as soon as possible following receipt of each new shipment.
- Maintain the control dosimeter in a low background area.

5.3. Dosimetry Change out

- Badge Change out
  - Ensure each dosimeter to be used during the next exposure period shows no sign of external damage, such as missing filters or windows.
  - If a dosimeter is damaged, assign another badge and remove the damaged badge from service.
  - Exchange each current dosimeter in the badge rack with the corresponding replacement badge.(See Dosimeter Exchange Form Attachment 7-3).

- If dosimeter is not in the dosimeter racks, indicating that the old dosimeter may be in use, **<u>do not</u>** place new dosimeter in the badge rack. New badges should be maintained in the possession of the RSO/RST until the old badges are returned by the user and accounted for.
- Ensure the names and dosimeter numbers match for each badge exchanged.
- Exchange control dosimeter and dosimeters assigned for purposes other than personnel monitoring as applicable (e.g., environmental and area monitoring badges).
- Assemble all old dosimeters and inventory them against the report of current dosimeter assignments and prepare a list of missing badges.
- Attempt to recover the missing dosimeters by performing the following:
    1. Review the exposure investigation reports to account for any dosimeters that might have been lost during the past issue period.
    2. Contact any individual who did not have his dosimeters exchanged during the normal change out and attempt to retrieve the badge.

- Shipping Dosimetry to the Vendor
    - After the routine badge exchange is complete, collect all badges issued to personnel during the prior monitoring period, all unissued badges, all badges removed from service, and all badges issued other than to personnel.
    - Badges shall be surveyed for contamination by the RSO or his designee prior to being packaged for shipment to the vendor and documented accordingly. Contaminated badges shall be reported to the RSO and an attempt made to remove the radioactive contamination.

5.4. Termination/Deactivation of Employees

- The RST should be informed of an employee or contractor termination so that the dosimeter may be collected and appropriate termination bioassay samples obtained if applicable.
- For employees the termination date is the actual last day of employment. For contract personnel, the termination date is the last day the individual was on site. If the last day on site is not known, use the best information available, but the termination date should not be later than the last day the badge was actually available to the individual for use.
- End the exposure period as of the termination date.
- Ensure the individual's badge is read and the dose record is updated on NRC Form 5 or equivalent (see Attachment 7-1).
- If requested by the individual at the time of termination, prepare a preliminary dosimetry report.

- The final dose report shall be signed by the RSO.
- Give a copy of the report to the individual and place the original in the individual's exposure history file.

5.5. Employee Dose Records

- Dosimeter issue forms shall have the name, unique ID number, badge number, date of issuance, date of return, initial and final readings, and other pertinent information as applicable.
- Use NRC Form 5 or equivalent, Annual Exposure Report (Attachment 7-1) for worker exposures > 100 mrem/yr.
- Records of dose to the embryo/fetus shall be maintained with the records of the declared pregnant woman.
- Records of all personnel exposure investigations, including lost badge investigations (Attachment 7-3), shall be maintained in the individual's dosimetry file.
- Documentation of lost dosimeters shall be maintained in the dosimetry files with a copy in the individual’s personal dosimetry file.
- Dose records for visitors to the site will be maintained.

5.6. Lost and Damaged badges

- In the event that a badge is lost after it has been used at the Midnite Mine, the dose received shall be estimated as described in the Missing Dosimetry Badge Form (Attachment 7-4) or other method approved by the RSO. Other methods may include but are not limited to the following:
  - ♦ Measured average exposure rate multiplied by time in area.
  - ♦ Exposure that other people doing similar work have received.
- All exposure estimates shall be recorded and maintained in the individual's dosimetry file.

## 6.0 RECORDS

All records shall be maintained in accordance with the Midnite Mine QAPP and Radiation Protection Plan.

The RST shall retain the following records:

- The current NVLAP certification shall be maintained on file for the external radiation dosimetry processor.
- Dosimetry Issuance, exchange and Missing Dosimeter Forms (Attachments 7-2 thru 7-4)).

Dosimetry records shall be maintained for a period of at least 10 years after the project has been completed.

The dose to the embryo/fetus shall be retained with the exposure history records of the declared pregnant woman.

## 7.0 REFERENCES AND BIBLIOGRAPHY

Midnite Mine Quality Assurance Plan and Procedures.

Midnite Mine Radiation Protection Plan.

U.S. NRC Regulatory Guide 8.7, "Instructions for Recording and Reporting Occupational Radiation Exposure Data".

U.S. NRC Regulatory Guide 8.13, "Instruction Concerning Prenatal Radiation Exposure".

U.S. NRC Regulatory Guide 8.29, "Instruction Concerning Risks from Occupational Radiation Exposure".

U.S. NRC Regulatory Guide 8.34, "Monitoring Criteria and Methods to Calculate Occupational Radiation Doses".

U.S. NRC Regulatory Guide 8.36, "Radiation Dose to the Embryo/Fetus".

NCRP Report No. 91, “Recommendations on Limits for Exposure to Ionizing Radiation”.

## 8.0 ATTACHMENTS

Attachment 7-1, NRC Form 5

Attachment 7-2, Dosimetry Issue Form

Attachment 7-3, Personal Dosimeter Exchange Form

Attachment 7-4, Missing Dosimetry Badge Form

# ATTACHMENT 7-1

PAGE _____ OF _____

**NRC FORM 5**
(1-2008)
**10 CFR PART 20**

**U.S. NUCLEAR REGULATORY COMMISSION**

## OCCUPATIONAL DOSE RECORD FOR A MONITORING PERIOD

**APPROVED BY OMB NO.3150-0006** **EXPIRES: 11/30/2010**

Estimated burden per response to comply with this mandatory collection request: 20 minutes. This information is used to ensure that doses to individual do not exceed regulatory limits. This information is required to record/annually report individual occupational exposure to radiation to ensure that the exposure does not exceed regulatory limits. Send comments regarding burden estimate to the Records and FOIA/Privacy Services Branch (T-5 F52), U.S. Nuclear Regulatory Commission, Washington, DC 20555-0001, or by internet e-mail to infocollects@nrc.gov, and to the Desk Officer, Office of Information and Regulatory Affairs, NEOB-10202, (3150-0006), Office of Management and Budget, Washington, DC 20503. If a means used to impose an information collection does not display a currently valid OMB control number, the NRC may not conduct or sponsor, and a person is not required to respond to, the information collection.

| 1. NAME (LAST, FIRST, MIDDLE INITIAL) | 2. IDENTIFICATION NUMBER | 3. ID TYPE | 4. SEX ☐ MALE ☐ FEMALE | 5. DATE OF BIRTH (MM/DD/YYYY) |
|---|---|---|---|---|
| | | | | |

| 6. MONITORING PERIOD (MM/DD/YYYY - MM/DD/YYYY) | 7. LICENSEE NAME | 8. LICENSE NUMBER(S) | 9A. ☐ RECORD ☐ ESTIMATE | 9B. ☐ ROUTINE ☐ PSE |
|---|---|---|---|---|
| | | | | |

**INTAKES**

| 10A. RADIONUCLIDE | 10B. CLASS | 10C. MODE | 10D. INTAKE IN $\mu$Ci |
|---|---|---|---|
| | | | |
| | | | |
| | | | |
| | | | |
| | | | |
| | | | |
| | | | |
| | | | |
| | | | |
| | | | |
| | | | |
| | | | |

**DOSES (in rem)**

| | | |
|---|---|---|
| DEEP DOSE EQUIVALENT | (DDE) | 11. |
| LENS (EYE) DOSE EQUIVALENT | (LDE) | 12. |
| SHALLOW DOSE EQUIVALENT, WHOLE BODY | (SDE,WB) | 13. |
| SHALLOW DOSE EQUIVALENT, MAX EXTREMITY | (SDE,ME) | 14. |
| COMMITTED EFFECTIVE DOSE EQUIVALENT | (CEDE) | 15. |
| COMMITTED DOSE EQUIVALENT, MAXIMALLY EXPOSED ORGAN | (CDE) | 16. |
| **TOTAL EFFECTIVE DOSE EQUIVALENT (ADD BLOCKS 11 AND 15)** | **(TEDE)** | 17. |
| **TOTAL ORGAN DOSE EQUIVALENT MAX ORGAN (ADD BLOCKS 11 AND 16)** | **(TODE)** | 18. |

19. COMMENTS

| 20. SIGNATURE - LICENSEE | 21. DATE PREPARED |
|---|---|
| | |

NRC FORM 5 (1-2010) PRINTED ON RECYCLED PAPER

## INSTRUCTIONS AND ADDITIONAL INFORMATION PERTINENT TO THE COMPLETION OF NRC FORM 5

***(All doses should be stated in rems)***

1. Type or print the full name of the monitored individual in the order of last name (include "Jr," "Sr," "III," etc.), first name, middle initial (if applicable).

2. Enter the individual's identification number, including punctuation. This number should be the 9-digit social security number if at all possible. If the individual has no social security number, enter the number from another official identification such as a passport or work permit.

3. Enter the code for the type of identification used as shown below:

| CODE | ID TYPE |
|---|---|
| SSN | U.S. Social Security Number |
| PPN | Passport Number |
| CSI | Canadian Social Insurance Number |
| WPN | Work Permit Number |
| PADS | PADS Identification Number |
| OTH | Other |

4. Check the box that denotes the sex of the individual being monitored.

5. Enter the date of birth of the individual being monitored in the format MM/DD/YYYY.

6. Enter the monitoring period for which this report is filed. The format should be MM/DD/YYYY - MM/DD/YYYY.

7. Enter the name of the licensee.

8. Enter the NRC license number or numbers.

9A. Place an "X" in Record, Estimate, or No Record. Choose "Record" if the dose data listed represent a final determination of the dose received to the best of the licensee's knowledge. Choose "Estimate" only if the listed dose data are preliminary and will be superseded by a final determination resulting in a subsequent report. An example of such an instance would be dose data based on self-reading dosimeter results and the licensee intends to assign the record dose on the basis of TLD results that are not yet available.

9B. Place an "X" in either Routine or PSE. Choose "Routine" if the data represent the results of monitoring for routine exposures. Choose "PSE" if the listed dose data represents the results of monitoring of planned special exposures received during the monitoring period. If more than one PSE was received in a single year, the licensee should sum them and report the total of all PSEs.

10A. Enter the symbol for each radionuclide that resulted in an internal exposure recorded for the individual, using the format "Xx-###x," for instance, Cs-137 or Tc-99m.

10B. Enter the lung clearance class as listed in Appendix B to 10 CFR Part 20.1001-2401 (D, W, Y, V, or O for other) for all intakes by inhalation.

10C. Enter the mode of intake. For inhalation, enter "H." For absorption through the skin, enter "B." For oral ingestion, enter "G." For injection, enter "J."

10D. Enter the intake of each radionuclide in $\mu$Ci.

11. Enter the deep dose equivalent (DDE) to the whole body.

12. Enter the eye dose equivalent (LDE) recorded for the lens of the eye.

13. Enter the shallow dose equivalent recorded for the skin of the whole body (SDE,WB).

14. Enter the shallow dose equivalent recorded for the skin of the extremity receiving the maximum dose (SDE,ME).

15. Enter the committed effective dose equivalent (CEDE).

16. Enter the committed dose equivalent (CDE) recorded for the maximally exposed organ.

17. Enter the total effective dose equivalent (TEDE). The TEDE is the sum of items 11 and 15.

18. Enter the total organ dose equivalent (TODE) for the maximally exposed organ. The TODE is the sum of items 11 and 16.

19. COMMENTS.
In the space provided, enter additional information that might be needed to determine compliance with limits. An example might be to enter the note that the SDE,ME was the result of exposure from a discrete hot particle. Another possibility would be to indicate that an overexposed report has been sent to NRC in reference to the exposure report.

20. Signature of the person designated to represent the licensee.

21. Enter the date this form was prepared.

## PRIVACY ACT STATEMENT

Pursuant to 5 U.S.C. 552a(e)(3), enacted into law by Section 3 of the Privacy Act of 1974 (Public Law 93-579), the following statement is furnished to individuals who supply information to the U.S. Nuclear Regulatory Commission (NRC) on NRC Form 5. This information is maintained in a system of records designated as NRC-27 and described at 71 Federal Register 59634 (October 10, 2006), or the most recent Federal Register publication of the NRC's Systems of Records Notices that is located in NRC's Agencywide Documents Access and Management System (ADAMS).

1. **AUTHORITY:** 5 U.S.C. 7902; 29 U.S.C. 668; 42 U.S.C. 2051, 2073, 2093, 2095, 2111, 2133, 2134, and 2201(o); 10 CFR 20.2106, 20.2201-20.2204, and 20.2206; Executive Order (E.O.) 9397; E.O. 12196, as amended by E.O.s 12223, 12608; E.O. 12258; E.O. 12399; E.O. 12489; E.O. 12534; E.O. 12610; E.O. 12692.

2. **PRINCIPAL PURPOSE(S):** The information is used by the NRC in its evaluation of the risk of radiation exposure associated with the licensed activity and in exercising its statutory responsibility to monitor and regulate the safety and health practices of its licensees. The data permits a meaningful comparison of both current and long-term exposure experience among types of licensees and among licensees within each type. Data on your exposure to radiation is available to you upon your request.

3. **ROUTINE USE(S):** The information may be used to provide data to other Federal and State agencies involved in monitoring and/or evaluating radiation exposure received by individuals monitored for radiation exposure while employed by or visiting or temporarily assigned to certain NRC licensed facilities; to return data provided by licensee upon request. Information may be disclosed in accordance with any of the Routine Uses listed in the Prefatory Statement of General Routine Uses, including to an appropriate Federal, State, local or Foreign agency in the event the information indicates a violation or potential violation of law; in the course of an administrative or judicial proceeding; to an appropriate Federal, State, local and foreign agency to the extent relevant and necessary for an NRC decision about you or to the extent relevant and necessary for that agency's decision about you; in the course of discovery under a protective order issued by a court of competent jurisdiction, and in presenting evidence; to a Congressional office to respond to their inquiry made at your request; to NRC-paid experts, consultants, and others under contract with the NRC, on a need-to-know basis; or to appropriate persons and entities for purposes of response and remedial efforts in the event of a suspected or confirmed breach of data from this system of records.

4. **WHETHER DISCLOSURE IS MANDATORY OR VOLUNTARY AND EFFECT ON INDIVIDUAL OF NOT PROVIDING INFORMATION:** It is voluntary that you furnish the requested information, including the Social Security number (SSN) in block #2. The SSN is used to assure that NRC has an accurate identifier not subject to the coincidence of similar names or birth dates among the large number of persons on who data is maintained. The licensee must complete NRC Form 5 on each individual for whom personnel monitoring is required under 10 CFR 20.2106. Failure to do so may subject the licensee to enforcement action in accordance with 10 CFR 20.2401.

5. **SYSTEM MANAGER AND ADDRESS**: REIRS Project Manager, Office of Nuclear Regulatory Research, U.S. Nuclear Regulatory Commission, Washington, DC 20555-0001.

**ATTACHMENT 7-2**

**Dosimeter Issue Form**

| Name | Organization | Dosimeter Number | Calibration Date | Date issued | Date returned | Initial Reading (mr) | Final Reading (mr) | Issued by Initials |
|---|---|---|---|---|---|---|---|---|
| | | | | | | | | |
| | | | | | | | | |
| | | | | | | | | |
| | | | | | | | | |
| | | | | | | | | |
| | | | | | | | | |
| | | | | | | | | |
| | | | | | | | | |
| | | | | | | | | |
| | | | | | | | | |
| | | | | | | | | |
| | | | | | | | | |
| | | | | | | | | |
| | | | | | | | | |
| | | | | | | | | |
| | | | | | | | | |
| | | | | | | | | |
| | | | | | | | | |
| | | | | | | | | |
| | | | | | | | | |
| | | | | | | | | |
| | | | | | | | | |
| | | | | | | | | |
| | | | | | | | | |

**ATTACHMENT 7-3**
**Personal Dosimetry Badge Exchange Form**

This form must be completed upon changeout of the dosimetry badges in accordance with RPP-SOP 07.

Year_____ Quarter_____

_____Replacement badges checked for correct labeling and acceptable condition.

_____Name and number checked for each badge exchanged.

_____Representative badges swiped for contamination. Copy of results attached to this form.

_____Chain of custody form completed. Copy attached to this form.

_____Changes in badge assignment documented

Badge assignment list:

| Badge No. | Employee name | Emp. No. | Comments (e.g. changed badge assignment) |
|---|---|---|---|
| | | | |
| | | | |
| | | | |
| | | | |
| | | | |
| | | | |
| | | | |
| | | | |
| | | | |
| | | | |
| | | | |
| | | | |
| | | | |
| | | | |

| Badge No. | Employee name | Emp. No. | Comments (e.g. changed badge assignment) |
|---|---|---|---|
| | | | |
| | | | |
| | | | |
| | | | |
| | | | |
| | | | |
| | | | |
| | | | |
| | | | |
| | | | |
| | | | |
| | | | |
| | | | |
| | | | |
| | | | |
| | | | |
| | | | |
| | | | |
| | | | |
| | | | |
| | | | |
| | | | |
| | | | |

Signed (RST) _____ Date _____

Reviewed (RSO) _____ Date _____

**ATTACHMENT 7-4**
**MISSING DOSIMETRY BADGE FORM**

Workers are required to report missing badge as soon as possible. The following form must be completed by the RST and RSO. A copy of this form will be filed with the employee's dose record.

Year_____ Quarter_____

Employee Name_____ Badge Number_____

Date badge lost_____

Date badge replaced_____ Replacement badge No._____

| Reason/location for the badge loss: |
|---|
| |
| |
| Actions taken: |
| |
| |

Employee signature_____ Date_____

RST signature_____ Date_____

---

MISSED DOSE CALCULATION

The "missed dose" will be calculated by the RSO by prorating the recorded dose for the quarter or by other method determined by the RSO to be more accurate.

Lost badge start date_____ Est. date of loss_____ No. of days_____

Replacement badge start date_____ Date of changeout_____

No. of days for replacement badge_____ Total quarter days_____

Replacement badge dose: DDE_____ LDE_____ SDE_____

Ratio of total quarter days to replacement badge days _____

Estimated total quarterly dose: DDE_____ LDE _____ SDE_____

Estimated total quarterly dose = recorded dose * qtr days/rep. badge days

RSO signature_____ Date_____

## ~~Approvals~~

~~**This Midnite Mine Radiation Protection Program SOP has been reviewed and approved by the following:**~~

~~**Name Title Date**~~

~~**Site General Manager**~~

~~**Site Operations Manager**~~

~~**Radiation Safety Officer**~~

# Table of Contents


**1. PURPOSE ..... 3**

**2. RESPONSIBILITY ..... 3**

2.1. RADIATION SAFETY OFFICER (RSO) ..... 3
2.2. SAFETY OFFICER/RADIATION SAFETY TECHNICIAN ..... 4
2.3. RESPIRATOR USERS ..... 4

**3. PRECAUTIONS ..... 4**

3.1. EXPOSURES TO RADIOLOGICAL MATERIALS ..... 4
3.2. AIR RESPIRATOR USAGE ..... 5
3.3. RESPIRATOR USAGE REQUIREMENTS ..... 5
3.4. RESPIRATOR TEMPERATURES ..... 5
3.5. SPECIAL CONSIDERATIONS FOR RESPIRATOR USE ..... 5

**4. EQUIPMENT AND MATERIALS ..... 5**

4.1. NIOSH APPROVED AIR PURIFYING RESPIRATORS MUST BE USED ..... 5

**5. PROCEDURE ..... 5**

5.1. USE OF RESPIRATORS ..... 5
5.2. SELECTION (RADIOLOGICAL) ..... 6
5.3. RESPIRATORY PROTECTION ISSUE ..... 7
5.4. MEDICAL REQUIREMENTS ..... 7
5.5. CORRECTIVE LENSES ..... 7
5.6. RESPIRATORY PROTECTION USE ..... 7
5.7. RESPIRATOR RE-USE ..... 8
5.8. TRAINING ..... 9
5.9. RESPIRATOR FIT TESTING ..... 10
5.10. QUALITATIVE RESPIRATOR FIT TEST ..... 10
5.11. RESPIRATOR MAINTENANCE ..... 11
5.12. HAND WASHING / PRE-WASH ..... 11
5.13. RADIOLOGICAL SURVEYS OF RESPIRATORS ..... 12
5.14. INSPECTION OF NEGATIVE PRESSURE AIR PURIFYING RESPIRATORS ..... 12

**6. RECORDS ..... 13**

**7. REFERENCES AND BIBLIOGRAPHY ..... 13**

**8. ATTACHMENTS ..... 13**

## 1. PURPOSE

This procedure describes the Respiratory Protection Program (RPP) for use during the Remedial Actions (RA) at the Midnite Mine Superfund Site (Site). The purpose of this procedure is to ensure that all Site personnel use respiratory protection appropriately, when necessary or advisable in accordance with the Radiation Protection Plan, to reduce intake by inhalation of hazardous and radioactive airborne contaminants in accordance with the Dawn Mining Company/Newmont USA Limited (hereafter referred to as the Company) Respiratory Protection Policy and OSHA regulations (29 C`FR 1910.134).

However, based on the very low levels of radioactivity associated with the materials to be excavated at the Midnite Mine RA project, it is not expected that respiratory protection will be necessary to maintain radiological exposures below project administrative limits and ALARA. At the discretion of the RSO, respiratory protection may be required if there is a potential for employee exposure to airborne radioactive material concentrations in air > 10 % of the DAC for ore dust of 6 E-11 from USNRC 10 CFR 20, Appendix B. For example, these circumstances could be possible during excavation of the uranium sledges from the pit bottom.

Respiratory Protection Policy Statement

*The Company is committed to establishing and maintaining a respiratory protection program consistent with the goal of protecting its employees. It is therefore the policy of this company that all employees, when required to use respirators in the workplace, or administering the Respiratory Protection Program (RPP), shall adhere to the principles established in the written procedures.*

*Administrative controls will be used to limit personnel access to or time spent in an area. Engineering controls will be used to limit generation and to control dispersion of airborne radioactive materials. Respirators shall be used to control personnel exposure to airborne radioactive materials when administrative and engineered controls are not effective and the use of respirators is necessary to maintain worker exposures to airborne radioactive material below limits established in the RPP and ALARA.*

*Individuals using tight-fitting respirators shall not have any facial hair that interferes with the sealing surface of the respirator. Any intrusion of facial hair into the sealing surface of the respirator can result in air in-leakage.*

*The Company will maintain a respiratory protection program in accordance with OSHA* regulations at 29 CFR 1910.134.

## 2. RESPONSIBILITY

2.1. Radiation Safety Officer (RSO)

- Responsible for the overall development and implementation of the Respiratory Protection Program.

- Responsible for providing technical direction and ensuring the evaluation of program effectiveness as it pertains to radioactive materials.

- Responsible for reviewing and approving Respiratory Protection Training Programs.

2.2. Safety Officer/Radiation Safety Technician

- Responsible for ensuring that the proper respirator cartridge is available.

- Responsible for providing technical direction and ensuring the evaluation of program effectiveness as it pertains to non-radioactive hazards.

- Responsible for reviewing and approving Respiratory Protection Training Programs.

- Responsible for cleaning, storing and issuing respirators as necessary in accordance with this procedure.

- Responsible for keeping records in regard to respirator use.

2.3. Respirator Users

- Responsible for complying with the requirements of the respiratory protection program.

- Responsible for using prescribed respiratory protection devices in compliance with instructions and training.

- Responsible for ensuring respiratory protection devices are returned to designated collection points.

- Responsible for protecting against damage to respiratory protection equipment.

- Responsible for reporting malfunctions of respiratory protection equipment to supervisors or safety personnel.

## 3. PRECAUTIONS

3.1. Exposures to Radiological Materials

Exposures to radiological materials through inhalation can be minimized through engineering and/or administrative controls and, as a last resort, the use of properly selected respiratory protection equipment. Any deviations from the established program(s) may result in unnecessary personnel exposure.

3.2. Air Respirator Usage

Air purifying respirators shall not be worn in atmospheres which are Immediately Dangerous to Life or Health (IDLH), or which contain an oxygen concentration of less than 19.5%.

3.3. Respirator Usage Requirements

The respirator user must have met all medical, training, and fit test requirements.

3.4. Respirator Temperatures

Respirators must not be exposed to temperatures exceeding 140 degrees F. Exposing respirators to temperatures in excess of 140 degrees F during the washing or drying process could cause deterioration of the rubber parts of the respirator or cracking of the lenses.

3.5. Special Considerations for Respirator Use

Since use of respirators may involve some decrease in ability to communicate and/or increase the effort and time required to perform certain tasks, respirator use should be justified by the potential for radionuclide exposure to workers in accordance with the RPP.

## 4. EQUIPMENT AND MATERIALS

4.1. NIOSH approved air purifying respirators must be used.

## 5. PROCEDURE

5.1. Use of Respirators

Respirator use is not expected to be necessary for routine operations and planned activities that are generally repetitive and/or occur with predictable frequencies. For such operations, potential sources of airborne contamination should be identified in advance so that engineering and/or administrative controls have been designed into the work practice and methods such that worker protection is accomplished by the use of process, containment, and ventilation measures and by preplanning of work. Respirators will not generally be used for such activities, if appropriate engineering and/or process controls present a reasonable alternative.

When respirators must be used, appropriate rest or relief periods shall be provided. An individual wearing a respirator may leave the work area at any time for relief in the event of equipment malfunction, physical or psychological distress, procedural or communication failure, significant deterioration of work area conditions, or any other condition that might require relief.

Non-routine operations are activities that are either non-repetitive, “ad –hoc” or occur so infrequently that adequate limitation of exposures by designed engineering controls is impractical. To the extent that process, containment, and ventilation controls are not reasonably feasible under such non-routine activities or operations, the use of respirators to minimize exposure to airborne

radionuclides above established criteria is appropriate.

Emergencies are unplanned events that require immediate action to avoid or mitigate a potentially dangerous situation. Although emergencies are unplanned, preparations are made to ensure that necessary and sufficient respiratory protection equipment is available for use in the event of an emergency.

5.2. Selection (Radiological)

- When selecting a respirator, consider the hazards that may be present, type and concentration of airborne radioactive materials as determined from pre-task air samples, available historical data on airborne radioactive material hazards for a particular work activity, levels of surface radioactive contamination, surface conditions (oily, wet, dry), worker comfort, radiation dose expected to be received wearing a respirator as opposed to expected dose without a respirator. Only NIOSH approved equipment shall be used.

- If both, radiological and non-radiological hazards are present, ensure that the prescribed respirator will protect against both hazards.

- Respiratory protection equipment shall be selected to provide a protection factor (PF) that will protect the wearer from peak concentrations of airborne radioactive materials in the working area. Equipment with a lower protection factor may be selected if it can be demonstrated that it will maintain the Total Effective Dose Equivalent (TEDE) ALARA.

  Example: Peak concentration = 10 Derived Air Concentration (DAC)

  Respiratory protection must provide a protection factor (PF) of at least 10 (or greater depending on administrative limits and criteria – see RPP). A half-face respirator has a nominal protection factor of 10 so it is suitable for this application. If the peak concentration is expected to be greater than 10 DAC, a full face filter respirator that provides a PF of 50, must be used. For peak concentrations greater than 50 DAC, the RSO and Safety Officer must be consulted since air-purifying respirators may not be adequate.

  Respirators should not be necessary or prescribed for radiological protection on jobs for which the expected air concentration is less than 0.1 DAC and at the discretion of the RSO will be used at concentrations > 0.1 DAC for ore dust.

- Respiratory protection measures may be appropriate as a precautionary measure for a situation in which no airborne hazard data is available and there is a large uncertainty in the magnitude of the concentrations of airborne radioactive material to which the workers may be exposed. A large uncertainty is considered to be where the airborne activity may be 10 times higher than anticipated for similar type jobs or situations. The use of respiratory protection is valid until the true airborne hazard has

been evaluated and the need for respiratory protection has been ascertained.

5.3. Respiratory Protection Issue

- Respiratory Protection Equipment shall be issued by the Safety Officer/Radiation Safety Technician.

- Respirators are to be issued for a maximum of one (1) work shift. The user shall be clean shaven prior to issue of the respirator.

5.4. Medical Requirements

Personnel who require the use of respiratory protection equipment in the course of work at the Site must have documented medical clearance from a physician.

5.5. Corrective Lenses

- Contact lenses shall not be used when wearing a full-face respirator.

- Personnel who require corrective lenses to perform normal responsibilities when wearing a full-face respirator shall wear prescription eye glasses approved for use inside a full-face respirator.

5.6. Respiratory Protection Use

- Inspection Prior to Use

  - ♦ Verify that the respirator issued is approved for the work to be performed.

  - ♦ Inspect the respirator to ensure it is free of defects or age, e.g., torn or frayed straps, bent or poor working buckles, loose or poor fitting lens, etc. If any defects or damages are noted, return the respirator to the Safety Manager's office.

  - ♦ If needed when using full-face respirators, insert prescription respiratory eyeglasses into the face piece. Only eyeglass assemblies approved for use in the specific respirator face piece shall be used.

- Respirator Donning

  - ♦ Pull all head harness straps out to the end tabs.

  - ♦ Insert chin into the face piece and lay the seal surface against the face.

- ♦ Pull the head harness back over the head.

- ♦ Make sure the headband straps are flat against the head.

- ♦ Adjust the headband straps for a snug, comfortable fit. Ensure that no hair or other material protrudes into the sealing surface of the face piece.

- ♦ Perform a negative and positive pressure test prior to entering the work area requiring respiratory protection to ensure a proper face to face piece seal. This test is performed as follows:
    - Cover the filter(s) inlet(s).
    - Gently inhale to collapse the face piece slightly.
    - Hold your breath for about 10 seconds.
    - If the face piece stays collapsed while holding your breath, the face to face piece seal is satisfactory.
    - If inward leakage is detected by the face piece not collapsing or not remaining collapsed while holding your breath, readjust the respirator by tightening the headband straps and retest.
    - If inward leakage is detected on the retest, return the respirator to the respiratory issue area.

- Respirator Removal

    - ♦ Unless required by an emergency situation (e.g., breathing becomes difficult), do not remove respirators until outside of the work area requiring respiratory protection.

    - ♦ If an emergency situation arises and breathing becomes difficult:
        - Remove the respirator and leave the work area immediately.
        - Immediately contact your supervisor.

    - ♦ To remove the respirator, remove potentially contaminated gloves and grasp the filters or face piece with both hands pulling the respirator forward and removing it from the head.

    - ♦ Following removal, swipe the inside surfaces to ensure it is not internally contaminated. If contamination in excess of background is detected, an intake may have occurred. The worker should be referred to the RSO for bioassay analysis (nasal /mouth swipes, urinalysis – See RPP-SOP03 Internal Exposure Monitoring)

5.7. Respirator Re-use

- If the respirator is to be reused on the same day and the same job, the following must be performed:
    - ▪ Wipe off the exposed surface of the mask.

    - Survey the mask to ensure that it is not internally contaminated.
    - Place the respirator in a clean plastic bag and ensure the respirator is labeled with the user's name.

- If the respirator is not to be reused, the user should place the respirator in a bag and return to the respirator to the RST for survey and cleaning.

5.8. Training

Training of personnel in the use of respiratory protective equipment shall be performed annually by the RSO or Radiation Safety Technician (RST). The instructor shall have a thorough knowledge of the application and use of respiratory protective equipment and the hazards associated with radioactive airborne contaminants. Training shall include, but is not limited to the following:

- The Company Respiratory Protection Policy.

- Discussion of the airborne contaminants against which the wearer is to be protected.

- Discussion of the construction, operating principles, and limitations of the various respirators in use.

- Instructions for assuring that respirators are in proper working condition.

- Instructions for donning and removing the respirator properly.

- Instructions in the proper method for checking to ensure an adequate face to face piece seal.

- Instruction in the proper use and maintenance of the respirator.

- Discussion of the types of cartridges and filters commonly used and the application for each type.

- Instruction in emergency actions to be taken in the event of a respirator malfunction.

- Radiation Safety Technicians shall receive training on equipment maintenance and decontamination to fulfill their responsibilities. This training shall include, but not be limited to the following:
    - Maintenance, inspection, and issuance of respiratory protection equipment.
    - Proper cleaning and disinfecting of respiratory protective equipment.
    - Analysis to detremine internal contamination following use
    - Proper storage of respirators.

5.9. Respirator Fit Testing

- Respirators with a tight-fitting face piece shall be fit tested to each individual to verify that an adequate seal can be obtained.

- The fit-testing shall be performed prior to first use for all users and shall be repeated at a frequency not to exceed 12 months for all potential users.

- Fit-testing shall be performed only on individuals who have current medical approval, received respiratory protection training, and are clean shaven.

- Qualitative fit testing shall be performed after performance of maintenance that could affect respirator integrity.

5.10. Qualitative Respirator Fit Test

- Initiate Respirator Log Sheet (Attachment to this SOP) by completing the following information:
  - Name of individual being fit tested.
  - Last four digits of his/her Social Security Number.
  - Department or Company.
  - Date.
  - Type, model and size of respirator.
  - Date of physician's medical clearance. If more than 12 months have elapsed, do not perform the fit test.
  - Date completed annual respirator users training.

- Select a medium size face piece or previously fitted size (if known).

- The following shall be reviewed with the individual being fit tested:
  - Skull caps worn under the respirator straps and away from the sealing surfaces are permissible.
  - A respirator sealing test shall always be performed after donning a respirator.
  - Respirators worn for protection against radionuclides in areas that are not IDLH can always be removed if there are any difficulties with the respiratory protection equipment, but the user shall exit the area immediately after removal.

- Remind the individual that a field seal test (either positive or negative) and an inspection must be performed each time a respirator is used. If the tests do not pass, attempt another size or style of respirator.

- Perform a qualitative fit test using irritant smoke, or equivalent, while talking and moving head.

- Record the results of the test on Attachment to this SOP, “Respirator Log Sheet”, as either Pass or Fail.

- If the individual passes the fit test, indicate the size of respirator on the Attachment.

- If the individual detects the irritant smoke while performing these activities, have him/her readjust the face piece or provide another size respirator, and repeat the test.

- If the individual does not detect the irritant smoke (or equivalent), then the qualitative fit test is satisfactory.

- Indicate on the Respiratory Log Sheet that the fit test was performed using the qualitative fit test method with the applicable challenge.

5.11. Respirator Maintenance

- Respirators shall be cleaned and disinfected after each use.

- Respirators shall be inspected after each cleaning and maintenance shall be performed if required.

- Respirators shall be stored face down (not on the rubber portion) in clean bags in clean locations. Storage facilities shall be located in an area free from chemical or physical agents that could be harmful to the respirator construction materials.

5.12. Hand Washing / Pre-Wash

Respirators may be washed and sanitized by hand. Hand washing and pre-washing shall be performed in the following manner:

- Prepare wash water by adding a commercial cleaner-sanitizer, according to the manufacturer’s directions, to hot water (120-130ºF). The normal detergent is MSA Cleaner-Sanitizer II. This cleaner-sanitizer requires one 2 oz. package per gallon of water.

- Immerse the respirator in the wash solution and scrub gently with a soft brush, cloth or sponge.

- After scrubbing all surfaces of the respirator thoroughly, rinse in clean hot water (120-130°F) to remove all traces of the wash solution. Rinsing of respirators must be thorough to prevent dermatitis or skin rashes to the respirator wearer caused by the cleaning-sanitizing solution.

- Remove all excessive water from the respirator.

- Allow respirators to air dry until all moisture has evaporated and the respirator is dry.

5.13. Radiological Surveys of Respirators

- Each cleaned and dried respirator shall be surveyed for radiological contamination in accordance with RPP-SOP04.

- Smears shall be taken of the inside and outside of each respirator face piece and evaluated for alpha contamination. If the smear survey results exceed alpha background, the respirator shall be re-washed.

5.14. Inspection of Negative Pressure Air Purifying Respirators

- Examine the face piece shell for dirt, cracks, tears, or distortion of the facial sealing surface.

- Examine the inner seal to ensure that it is smooth, supple, and continuous.

- Examine the lens for cracks, excessive scratches, tight seal, and discoloration (if applicable).

- Examine the lens retaining rings by grasping the lens retaining rings at each end gently flexing the lens to ensure the rings are secure and the lens stays securely in place.

- Examine the head harness for breaks, loss of elasticity or excessively worn strap serration that might permit slippage.

- Remove the exhalation valve cover and inspect valve for foreign materials such as dirt or soap crystals. Examine the valve for material cracks, tears, or distortion.

- Examine the speaking diaphragm assembly integrity (if applicable).

- Examine buckles to ensure they are free of defects, securely mounted and operational.

- Check all clamps and connections to ensure they are tight and secure.

- If the respirator does not successfully pass each of the examinations above, identify the respirator as being “Out-of-Service”.

## 6. RECORDS

Respirator fit test and medical doctor's approval records will be kept in the individual worker personnel file and duplicates in the near the respirator issue area. Surveys for contamination after cleaning shall be kept in the Safety Manager/RST office.

Respirator log sheets shall be completed on each individual who is issued a respirator.

## 7. REFERENCES AND BIBLIOGRAPHY


OSHA 29 CFR 1910.134

USNRC Regulatory Guide 8.15, Acceptable Programs for Respiratory Protection

USNRC NUREG 0041, Manual of Respiratory Protection Against Airborne Radioactive Materials

ANSI Z88.2-1980, Practices for Respiratory Protection

ANSI Z88.6-1984, Respirator Use-Physical Qualification for Personnel

USNRC Regulatory Guide 8.30, Health Physics Surveys in Uranium Mills

Midnite Mine Remedial Action Program Radiation Protection Plan


## 8. ATTACHMENTS

Respirator Log Sheet

**ATTACHMENT 1-1**
**RESPIRATOR LOG SHEET**

NAME:_____ DATE:_____

SOCIAL SECURITY NUMBER (Last four digits only):_____

MEDICAL EVALUATION DATE:_____
RESPIRATORS USERS TRAINING DATE:_____

| | RESP. TYPE | RESP.TYPE | RESP.TYPE |
|---|---|---|---|
| Specify make, model, size | FULL FACE | HALF FACE | |
| Pre inspection | | | |
| Positive pressure check | | | |
| Negative pressure check | | | |
| Banana Oil | | | |
| Irritant smoke | | | |
| Performed By | | | |

| ISSUE DATE | ISSUE BY | RETURN DATE | INSPECTED BY/DATE |
|---|---|---|---|
| | | | |
| | | | |
| | | | |
| | | | |
| | | | |
| | | | |
| | | | |

COMMENTS:_____
_____
_____
_____
_____

## ~~Approvals~~

~~This Midnite Mine Radiation Protection Program SOP has been reviewed and approved by the following:~~

| ~~Name~~ | ~~Title~~ | ~~Date~~ |
|---|---|---|
| | ~~Site General Manager~~ | |
| | ~~Site Operations Manager~~ | |
| | ~~Radiation Safety Officer~~ | |

# Table of Contents

**1. PURPOSE ..... 3**

**2. RESPONSIBILITY ..... 3**

2.1. RADIATION SAFETY OFFICER (RSO) ..... 3
2.2. RADIATION SAFETY TECHNICIAN ..... 3
2.3. SUPERVISORS ..... 3
2.4. ESCORTS ..... 4
2.5. EMPLOYEES ..... 4

**3. PRECAUTIONS ..... 4**

3.1. APPROPRIATE PERSONAL PROTECTIVE EQUIPMENT ..... 4

**4. PROCEDURE ..... 4**

4.1. GENERAL REQUIREMENTS ..... 4
4.2. REQUIREMENTS FOR ACCESS TO A CONTROLLED AREA ..... 5
4.3. ADDITIONAL REQUIREMENTS FOR CONTROLLED AREAS ..... 5

**5. REFERENCES AND BIBLIOGRAPHY ..... 6**

## 1. PURPOSE

This procedure provides the access control requirements for entry/egress to and from Controlled Areas at the Midnite Mine Superfund Site (Site). Controlled Areas are defined as areas inside the perimeter fence within which remedial activities are being conducted and radiological hazards may exist. Controlled Areas in other portions of the Site may be identified during the Remedial Action (RA) activities based on known or potential radiation hazards, and will be identified and delineated by the Radiation Safety Officer or Radiation Safety Technician. This procedure is designed to ensure that all individuals have received appropriate training, qualification and authorization for entry. This procedure is applicable to all project personnel, visitors, and contractors who enter Site Controlled Areas. This procedure also provides posting requirements for the Controlled Areas.

## 2. RESPONSIBILITY

2.1. Radiation Safety Officer (RSO)

- Responsible for approving training programs related to work within the Controlled Areas.
- Responsible for designing the requirements for all individuals needing access to the Controlled Areas, including remedial action workers, non-remedial action workers, visitors, and contractors.
- Responsible for ensuring that appropriate physical/administrative controls and the associated postings are in place based upon regulatory requirements and survey results.

2.2. Radiation Safety Technician

- Responsible for restricting access to individuals when necessary.
- Responsible for ensuring that all personnel entering the Controlled Areas have appropriate training.
- Responsible for ensuring that Controlled Area entry training is administered and documented.
- Providing training as required in the absence of the RSO.

2.3. Supervisors

- Responsible for ensuring that personnel under their direction are aware of the radiological and non-radiological hazards potentially present in all work areas.

2.4. Escorts

- Responsible for maintaining positive control over the escorted individual such that he/she does not enter an unauthorized area.

- Responsible for ensuring that the escorted individual has the required training and authorization to enter the Controlled Areas.

2.5. Employees

- Responsible for attending assigned training classes.

- Responsible for informing the RSO or RST of factors which may limit their entry into the Controlled Areas (i.e. medical radiation treatments, open wounds, etc.).

- Responsible for complying with radiological postings and applicable procedures and requirements.

- Responsible for notifying the RSO or RST of any unusual conditions.

- Responsible for returning personal dosimetry for storage upon exit from Controlled Areas.

- Responsible for complying with the entry requirements for the Controlled Area.

- Along with the RST, responsible for monitoring and providing documentation for materials leaving the Controlled Area to ensure that radiological contamination levels are within release limits.

## 3. PRECAUTIONS

3.1. Appropriate Personal Protective Equipment

Appropriate Personal Protective Equipment (PPE) and dosimetry, as required by RPP-SOP03, RPP-SOP07, and RPP-SOP08, shall be worn when entering the Controlled Area.

## 4. PROCEDURE

4.1. General Requirements

- Personnel who normally work within a Controlled Area will be issued personal dosimeters (TLD, or OSL dosimeters).

- Employees shall store dosimeters in designated, low background storage locations prior to leaving the site.

- Only properly trained or escorted personnel shall be permitted inside the Controlled Area.

- Unescorted individuals working in a Controlled Area shall be required to receive remedial action worker training.

4.2. Requirements for Access to a Controlled Area

- Individuals granted unescorted access to a Controlled Area shall be provided with dosimeters that shall be stored in designated, low background storage locations when not in use.

- Individuals entering a Controlled Area shall have completed the training requirements in RPP-SOP11, and the training shall be performed at least annually.

- Visitors, employees, and contractors who have not completed the requirements in RPP-SOP11 may be granted temporary access to a Controlled Area provided they have obtained approval from the RSO, RST, or designee and have a qualified escort.

- The RST shall be notified of the following prior to entering a Controlled Area:

  - ♦ Medical administration of radiopharmaceuticals.

  - ♦ Presence of open wounds.

  - ♦ Upon returning to the Site after or while being monitored for radiation exposure at another facility.

  - ♦ Declaration of pregnancy per RPP Sections 8 and 12.2.

4.3. Additional Requirements for Controlled Areas

- Boundaries shall be established in such a manner that a person cannot inadvertently enter the Controlled Area (e.g. postings, ribbons, fences, etc.).

- Postings shall be magenta (or black) and yellow in color, contain the conventional three-bladed radiation symbol, contain the word “Caution Radioactive Material”. An alternative is to post all Controlled Areas as “ Caution, any area within this boundary may contain radioactive material”.

- Protective clothing as specified (e.g. coveralls, gloves, head protection, work boots, etc.) and personnel contamination monitoring upon existing shall be required when working in control areas as directed by the RST or RSO. Work clothing (coveralls, etc.) will be provided to workers and will remain on site for laundering and subsequent re-issue.

## 5. REFERENCES AND BIBLIOGRAPHY


U.S. NRC Regulatory Guide 8.29, “Instruction Concerning Risk from Occupational Radiation Exposure”.

U.S. NRC Regulatory Guide 8.13, “Instruction Concerning Prenatal Radiation Exposure”.

USNRC Regulatory Guide 8.30, Health Physics Surveys in Uranium Mills.

U.S. NRC Regulatory Guide 8.31, “Information Relevant to Ensuring that Occupational Radiation Exposures at Uranium Mills will be As Low As is Reasonably Achievable”.

## ~~Approvals~~

~~This Midnite Mine Radiation Protection Program SOP has been reviewed and approved by the following:~~

| ~~Name~~ | ~~Title~~ | ~~Date~~ |
|---|---|---|
| | ~~Site General Manager~~ | |
| | ~~Site Operations Manager~~ | |
| | ~~Radiation Safety Officer~~ | |

# Table of Contents


**1. PURPOSE ..... 3**

**2. RESPONSIBILITY ..... 3**

2.1. RADIATION SAFETY OFFICER (RSO) OR RST RESPONSIBILITIES ..... 3
2.2. ALL EMPLOYEES ..... 3

**3. PROCEDURE ..... 3**

3.1. DOSE INVESTIGATION REPORT ..... 3
3.2. INTERNAL EXPOSURE - DETERMINING THE AMOUNT OF INTAKE ..... 4
3.3. DETERMINATION OF COMMITTED EFFECTIVE DOSE EQUIVALENTS (CEDE) ..... 5
3.4. EXTERNAL EXPOSURE AND CALCULATION OF TOTAL EFFECTIVE DOSE EQUIVALENT ..... 6

**4. NOTIFICATIONS ..... 6**

4.1. PROJECT MANAGER NOTIFICATION ..... 6
4.2. EVALUATION RECORDS ..... 6
4.3. REGULATORY AUTHORITY NOTIFICATION ..... 6
4.4. COMPLETED DOSE INVESTIGATION ..... 6

**5. RECORDS ..... 7**

5.1. EXPOSURE RECORDS ..... 7
5.2. RECORDS OF EVALUATIONS ..... 7

**6. BIBLIOGRAPHY ..... 7**

**7. ATTACHMENTS ..... 7**

## 1. PURPOSE

This procedure describes monitoring requirements, methods, evaluation criteria, and calculations necessary to determine intakes and doses for workers at the Midnite Mine Site.

## 2. RESPONSIBILITY

### 2.1. Radiation Safety Officer (RSO) or RST Responsibilities

The Radiation Safety Officer (RSO) or RST (as may be assigned by the RSO working under his/her supervision) is responsible for:

- Performing dose calculations.
- Ensuring that air samples provide representative samples of the work area, personnel breathing air, and the environment, as applicable, to allow for the identification and evaluation of potential radiological hazards.
- Authorizing sampling methods and instrumentation to be used for analysis of samples.
- Implementation of the exposure monitoring program.
- Providing the methodology for performing dose calculations.
- Investigating regulatory and/or administrative limits which are exceeded, including documentation of results.
- Review and approval of exposure data.

### 2.2. All Employees

- Responsible for notifying the RSO when medical treatments involving radionuclides have been received.
- Responsible for using and wearing assigned external dosimeters in accordance with RPP SOP 7 and supplying bioassay samples when requested in a timely manner in accordance with RPP SOP 3.
- Responsible for collecting the bioassay samples in accordance with instructions designed to prevent cross contamination.

## 3. PROCEDURE

### 3.1. Dose Investigation Report

- The Dose Investigation Report serves as a cover sheet for all supporting information that may be gathered during the evaluation of an internal deposition. (See Attachment 10-1)

- Final dose assignments (if applicable) shall be made on the Dose Investigation Report. Any assumptions made during the calculation of exposure assignments should be documented in the attachments to this report.

3.2. Internal exposure - Determining the Amount of Intake

- Intakes shall normally be calculated based upon the results of the air monitoring program, unless in the opinion of the RSO, bioassay data is more representative of intake. Airborne uranium at the Midnite Mine is assumed to be solubility / clearance Class Y (ICRP 30; USNRC Regulatory Guide 8.22 and USNRC NUREG 0874) unless otherwise determined by the RSO. Use of any other solubility / clearance class will be documented by the RSO with justification.

  The following information regarding potential internal exposure (intake) shall be collected if possible:

  - ♦ Time of the initial intake (use the actual event time, personnel estimation of time based on recollection of activities, the individual's work schedule, facility operations data, or historical air monitoring data.) When information is insufficient to determine the time of intake, it is acceptable to initially assume that the intake occurred at the mid-point of the time period since the last bioassay measurement.

  - ♦ The amount of time that has passed since the intake.

  - ♦ The inhalation class of the uranium (see discussion above)

- Intakes shall be calculated by the RSO or designee. Intakes will be evaluated using the models and data provided by:

  - ♦ Health Physics, November 2002: Intake Retention Fractions Developed from Models Used in the Determination of Dose Coefficients Developed for ICRP Publication 68 – Particulate Inhalation.

  - ♦ EPA 520/1-8-020 (Federal Guidance Report No. 11), "Limiting Values of Radionuclide Intake and Air Concentration and Dose Conversion Factors for Inhalation, Submersion, and Ingestion" or the ICRP Database of Dose Coefficients for Workers and Members of the Public

  - ♦ Accepted industry standards and practices.

- Calculation of intake for air samples is performed as follows:

  Intake = Sample result (µCi/ml) x std. man breathing rate (1.2 $m^3$/hour) x 1 E+06 ml/$m^3$ x time worked (hours) x respiratory protection

factor (if applicable and in accordance with RPP SOP 8, Respiratory Protection).

Calculation of intake for bioassay samples is performed will be performed by the RSO) in accordance with the models referenced in Section 3.2.2 above and/or similar standards of practice (e.g., HPS N13.22, American National Standard, Health Physics Society; HPS N13.22-1995; USNRC NUREG 0874, Internal Dosimetry Models for Applications to Bioassay at Uranium Mills.

- Intakes shall be recorded on the Dose Investigation Report (Attachment 10-1)

3.3. Determination of Committed Effective Dose Equivalents (CEDE)

- The internal dose of an individual (CEDE) may be determined using the methodology provided in Federal Guidance Report No. 11, or using the dose coefficients provided in ICRP in the ICRP Database of Dose Coefficients for Workers and Members of the Public as follows:

DAC-hour =

$$\frac{Concentration\ of\ Radionculide\ in\ Air}{DAC} * Time\ Exposed\ at\ Stated\ Concentration\ (in\ hours)$$

CEDE = $\frac{DAC_{hours}}{ALI} * 5rem$

Where:

CEDE = Committed Effective Dose Equivalent (mrem)

ALI = Annual Limit on Intake (µCi) from USNRC 10 CFR Part 20 Appendix B

DAC for natural uranium (assuming solubility Class Y) is 2E-11 µCi/mL.

ALI for natural uranium (assuming solubility Class Y) is 5E-2 µCi.

DAC-hour: The product of the concentration of radioactive material in air (expressed as a fraction or multiple of the derived air concentration for each radionuclide) and the time of exposure to that radionuclide, in hours. A licensee may take 2,000 DAC-hours to represent one annual limit on intake (ALI), equivalent to a committed effective dose equivalent of 5 rem (0.05 Sv).

- The Committed Effective Dose Equivalent for each worker shall be recorded on his/her Employee Permanent Exposure Record (NRC Form 5 or equivalent).

- The committed dose equivalents should be recorded on the Dose Investigation Report (Attachment 10-1).

3.4. External Exposure and Calculation of Total Effective Dose Equivalent

The external whole body radiation dose is measured with TLDs or OSLs (See RPP SOP-7) reported and recorded as mrem/year. The total radiation dose is the sum of the internal and external radiation doses:

$$TEDE = CEDE + DDE$$

Where:

TEDE = Total effective dose equivalent in mrem = total radiation dose

CEDE = Committed effective dose equivalent in mrem from intake of natural uranium (and in combination with decay products as applicable) – from air sampling and/or bioassay results

DDE = The external deep dose equivalent as measured by TLDs or OSLs

## 4. NOTIFICATIONS

4.1. Project Manager Notification

The Project manager shall be notified by the RSO immediately if an individual received or may have received a Total Effective Dose Equivalent (TEDE) of 5 rem or more or a release of radioactive material such that an individual could have received an intake of > ALI (Annual Limit on Intake) within the year.

4.2. Evaluation Records

Records of evaluations, individual dose assessments and assignments and notifications to employees shall be maintained in the dosimetry files by the RSO. When a record pertains to a specific individual, a copy of the record shall be placed into the individual's dosimetry file (See also RPP SOP3, Internal Dosimetry and RPP SOP 7, External Dosimetry)

4.3. Regulatory Authority Notification

The appropriate regulatory authority (OSHA, e.g.) shall be notified by the RSO within 24 hours if an individual received or may have received in a period of 24 hours a TEDE exceeding 5 rem, an Eye Dose Equivalent (LDE) exceeding 15 rem, or a SDE to the skin or extremities exceeding 50 rem, or a release of radioactive material such that an individual could have received an intake exceeding 1 ALI. RPP-SOP01 contains more information on reporting.

4.4. Completed Dose Investigation

Completed Dose Investigation Reports shall be retained in the affected individual's exposure history records.

## 5. RECORDS

### 5.1. Exposure Records

Records related to exposure assignments of workers, including air sampling and bioassay monitoring, TLD or OSL results, dose calculations, etc. shall be maintained for a period of 10 years following project completion.

### 5.2. Records of Evaluations

Records of evaluations and notifications shall be maintained in the dosimetry files. When a record pertains to a specific individual, a copy of the record shall be placed into the individual's dosimetry file.

## 6. BIBLIOGRAPHY


U.S. NRC Regulatory Guide 8.11, "Applications of Bioassay for Uranium" and NUREG 0874, Internal Dosimetry Models for Applications to Bioassay at Uranium Mills.

U.S. NRC Regulatory Guide 8.34, "Monitoring Criteria and Methods to Calculate Occupational Radiation Doses".

ANSI N13.30-1989 (Draft) "American National Standard for Performance Criteria for Radiobioassay".

NUREG/CR-4884, "Interpretation of Bioassay Measurements".

EPA 520/1-8-020 (Federal Guidance Report No. 11), "Limiting Values of Radionuclide Intake and Air Concentration and Dose Conversion Factors for Inhalation, Submersion, and Ingestion".

U.S. NRC Regulatory Guide 8.9, "Acceptable Concepts, Models, Equations, and Assumptions for a Bioassay Program".

U.S. NRC Regulatory Guide 8.22, "Bioassay at Uranium Mills".

U.S. NRC 10 CFR Part 20 Appendix B.

Midnite Mine Radiation Protection Plan.

Midnite Mine Quality Assurance Plan .


## 7. ATTACHMENTS

Attachment 10-1 - Dose Investigation Report

**ATTACHMENT 10-1**
**DOSE INVESTIGATION REPORT**

| | | | | |
|---|---|---|---|---|
| ***SECTION I*** | | | BADGE # | |
| For: | Last Name | | First | MI |
| SSN# (last 4 digits only): | Type of Exposure: External: | | Internal: | |
| Date/Time of Exposure | SWP# | | Location | |
| Activity being performed by individual | | | | |
| | | | | |
| External Monitoring Method | Results | Internal monitoring method | Results | |
| TLD | Mrem | Bioassay (in-vitro) | pCi/L | |
| OSL | Mrem | Bioassay (in-vitro) | nCi | |
| Area survey (describe) | | Lapel air sample | µCi/ml | |
| Other (describe) | | Area air sample | µCi/ml | |
| | | Other (describe) | | |
| | | | | |
| ***SECTION II*** | | | | |
| Interview/Investigation Results: | | | | |
| | | | | |
| | | | | |
| | | | | |
| Other Personnel Involved: | | | | |
| ***SECTION III*** | | | | |
| Cause of Exposure: | | | | |
| | | | | |
| SECTION IV | | | | |
| | | | | |
| | | | | |
| Calculations/Dose Assignment | Permanent Record | | Estimated | |
| | | | | |
| | | | | |
| ***SECTION V*** | | | | |
| Recommendations: | | Follow-up Monitoring Required? | Yes | No |
| | | | | |
| | | | | |
| | | | | |
| | | | | |
| | | | | |
| | | | | |
| | | | | |
| | | | | |
| | | | | |
| Exposed Individual Signature: | | | Date: | |
| RSO Signature: | | | Date: | |
| Supervisor Signature: | | | Date: | |

| MIDNITE MINE RA<br>RADIATION PROTECTION PROGRAM<br>STANDARD OPERATING PROCEDURES | **RPP-SOP11**<br>**REVISION: 2** |
|---|---|
| **RADIATION SAFETY TRAINING** | **PAGE: 1 OF 5**<br>**DATE: May, 2014** |

## ~~Approvals~~

~~This Midnite Mine Radiation Protection Program SOP has been reviewed and approved by the following:~~

| ~~Name~~ | ~~Title~~ | ~~Date~~ |
|---|---|---|
| | ~~Site General Manager~~ | |
| | ~~Site Operations Manager~~ | |
| | ~~Radiation Safety Officer~~ | |

## Table of Contents


1. PURPOSE ..... 3
2. RESPONSIBILITY ..... 3
3. PROCEDURE ..... 3
4. RECORDS ..... 5
5. REFERENCES AND BIBLIOGRAPHY ..... 5

## 1. PURPOSE

The purpose of this Standard Operating Procedure (SOP) is to outline the training requirements for all employees and contractors working on the Remedial Action Project at the Midnite Mine site.

This SOP provides an outline for guidance in preparing and implementing the radiation safety training program for employees and contractors. The Radiation Safety Officer (RSO) is responsible for preparing or approving training materials for all staff including General Employee Radiation Training (GERT) and Remedial Action Worker Training (RAWT) prior to the start of the remedial action.

## 2. RESPONSIBILITY

The Site Manager is responsible for ensuring that all staff at the site are properly trained in accordance with approved training schedules and guidelines, as well as records retention and document control. The RSO is responsible for developing and/or approving and providing training to all site employees, preparation of exam materials, and ensuring that the training materials represent current radiation safety best practices as applicable to the radiological environment at the site and the radiation hazards potentially associated with the Remedial Action. The RSO should ensure that the training materials are consistent with the requirements of the RPP and this SOP. The RSO should ensure that training reflects work methods that are consistent with the site ALARA policy. The RSO is responsible for maintaining all training records for project workers and contractors. Successful completion of radiation safety training will be documented via achieving a score of at least 70% on the exams prepared and administered by the RSO.

## 3. PROCEDURE

Radiation safety training for the Midnite Mine RA Project will be designed to inform employees of the inherent risks of exposure to radiation as well as the fundamentals of protection against exposure to uranium and its progeny. The radiation safety training program will be administered according to guidance provided in NRC Regulatory Guide 8.31, NRC Regulatory Guide 8.29, and NRC Regulatory Guide 8.13. All employees will be provided access to and made familiar with instructions outlining radiation safety and emergency procedures.

All new employees will receive at a minimum General Employee Radiation Training (GERT) which will provide general awareness of:

- Nature and hazards associated with ionizing radiation;
- Expected radiation levels and sources of radioactivity at the project site;
- Monitoring methods and procedures;
- Summary of plant operating procedures including the RPP and HASP;
- Emergency procedures;
- Employee rights per 10 CFR Part 19.

Employees at the facility who will be working in Controlled Areas will be designated, as “remedial action workers” and will receive additional training on the following topics:

- Fundamentals of Radiological Health Protection;
- Human Exposure pathways associated with uranium and its decay products (external exposure, inhalation and ingestion);
- Why the concept of ALARA is important with respect to exposure from uranium and its progeny;
- Radiological environment and hazards at the Midnite Mine RA Project (associated with uranium, radium and other uranium decay products);
- Personal hygiene at uranium projects- Eating, drinking, and smoking in only in designated areas;
- The use of protective clothing;
- The potential need for and correct use of respiratory protective equipment;
- Standard operating procedures;
- Security and access control to designated areas;
- Measurement of external exposure rates;
- Measurement of airborne radioactive materials;
- Bioassay to detect uranium under special circumstances;
- Surveys to detect contamination of personnel and equipment;
- Using proper methods for decontamination;
- Applicable Radiation Protection Regulations;
- Employee rights per 10 CFR Part 19;
- Emergency Procedures.

In addition to the above topics, female employees will be given instruction and training to addresses risks associated with prenatal radiation exposure. The training will be based upon NRC Regulatory Guide 8.13, and may be given as instruction in a classroom setting or as an informational pamphlet. This training will consist of the following:

- Risks associated with prenatal radiation exposure;
- Regulations concerning exposure limits and dose monitoring provisions for pregnant women;
- Midnite Mine policy for pregnancy declaration.

A written test with questions directly related to the radiation safety training will be administered to each employee. The instructor will review the test with each employee and discuss any incorrect answers so that the employee understands the error. Workers who do not pass the test with 70% of the answers correct will be retested after receiving additional training.

Employees will also be given specific instruction on the health and radiation safety aspects and non-radiological hazards potentially associated with the specific jobs and tasks they will perform (“on the job” training). If the employee is a supervisor, they will be given special instruction pertaining to their supervisory responsibilities in the area of worker radiation protection.

Radiation safety issues or concerns that arise during the Remedial Action will be addressed during regularly scheduled daily or weekly safety (“tail – gate”) meetings.

Each employee will receive a radiation safety training refresher course annually. The training will include a brief review of topics covered in the initial training as well as relevant information that has subsequently become available with regard to radiation safety issues that have arisen, changes in requirements, experience ("lessons learned") and employee exposure trends.

Contractors who have previously received complete remedial action worker training within the previous 12 months from prior work experience at the project or have documented evidence of recent and relevant radiation safety training elsewhere may receive only GERT and job-specific radiation safety training (at the discretion of the RSO). All other visitors to the site will be given hazard recognition training and will be escorted at all times by properly trained staff.

## 4. RECORDS

After completion of training, employees and contractors will be required to sign a statement that they have received radiation safety training that documents the training program syllabus. The statement will outline the extent of the training and the dates when the training was received. The statement will also be signed by the RSO. These statements, as well as employee test records will be maintained on-site until the site is released.

## 5. REFERENCES AND BIBLIOGRAPHY

USNRC, Regulatory Guide 8.13 "Instruction Concerning Prenatal Radiation Exposure" 1999

USNRC, Regulatory Guide 8.29 "Instruction Concerning Risks from Occupational Radiation Exposure" 1996

USNRC, Regulatory Guide 8.31 "Information Relevant to Ensuring that Occupational Radiation Exposures at Uranium Recovery Facilities Will Be As Low As Is Reasonably Achievable" 2002.

# ATTACHMENT B
# TOXICOLOGICAL PROFILE FOR URANIUM AND URANIUM DECAY PRODUCTS

## TOXICOLOGICAL PROFILE FOR URANIUM AND ITS DECAY PRODUCTS

The only radionuclides present at the Midnite Mine are uranium isotopes and their decay products. The uranium decay series characteristics are shown in Table B-1. Natural uranium (U-nat) consists of three isotopes: U-238, U-234, and U-235. Uranium-235 has a natural abundance of 0.72 percent (by weight) and is present at an activity concentration of 2.3 percent of the activity concentration of natural uranium (about 49% each U-238 and U-234). Thorium-230 and Ra-226 are long-lived decay products of U-238. Radon-222 is a decay product of Ra-226 and may be present at the Midnite Mine in air.

**Table B-1. Uranium-238 Decay Series**

| Nuclide | Atomic Number | Mode of Decay | Energy (MeV) (percent) [emissions greater than 10% only] | Half-life | Decay Product |
|---|---|---|---|---|---|
| U-238 | 92 | Alpha | 4.15 (22.9)<br>4.20 (76.8) | 4.47E9 y | Th-234 |
| Th-234 | 90 | Beta | 0.189 (72.5)<br>0.096 (18.6) | 24.1 d | Pa-234m |
| Pa-234m | 91 | Beta | 2.28 (98.6) | 1.17 m | U-234 |
| U-234 | 92 | Alpha | 4.72 (27.4)<br>4.77 (72.3) | 2.45E5 y | Th-230 |
| Th-230 | 90 | Alpha | 4.62 (23.4)<br>4.69 (76.2) | 7.7E4 y | Ra-226<br>-214 |
| Ra-226 | 88 | Alpha | 4.78 (94.4) | 1.6E3 y | Rn-222 |
| Rn-222 | 86 | Alpha | 5.49 (99.9) | 3.82 d | Po-218 |
| Po-218 | 84 | Alpha | 6.00 (100) | 3.05 m | Pb-214 |
| Pb-214 | 82 | Beta<br><br>Gamma | 0.67 (48)<br>0.73 (42.5)<br>0.295 (19.2)<br>0.352 (37.1) | 26.8 m | Bi-214 |
| Bi-214 | 83 | Beta<br><br><br>Gamma | 3.27 (17.7)<br>1.54 (17.9)<br>1.51 (17.6)<br>0.609 (46.1)<br>1.12 (15.0)<br>1.77 (15.9) | 19.9 m | Po-214 |
| Po-214 | 84 | Alpha | 7.69 (100) | 0.164 ms | Pb-210 |
| Pb-210 | 82 | Beta | 0.016 (80)<br>0.063 (20) | 22.3 y | Bi-210 |
| Bi-210 | 83 | Beta | 1.16 (100) | 5.01 d | Po-210 |
| Po-210 | 84 | Alpha | 5.305 (100) | 138.4 d | Pb-206<br>Stable |

## RADIOLOGICAL ENVIRONMENT AT THE MIDNITE MINE REMEDIAL ACTION PROJECT AND BIOLOGICAL EFFECTS OF IONIZING RADIATION

It must first be recognized that the levels of radiation above background expected to be encountered at the Midnite Mine Remedial Action project are low. The primary type of exposure to workers that will be encountered at this project will be external exposure to gamma rays from uranium's decay products, primarily from radium 226 and its decay products. The degree of exposure is expected to be much less than what the workers get from natural background radiation exposure each year (about 300 - 400 mrem as the US average). Natural background can vary considerably across the United States depending on local conditions of mineralization in the rocks and soils and elevation above sea level. For example, the annual natural background in areas of Colorado can be 600 - 700 mrem or more.

The principal health hazard from chronic exposure to ionizing radiation is increased risk of cancer. Ionizing radiation has been shown to be a carcinogen at high doses; however, there are no data to show that negligible doses of radiation, in the range of radiation doses anticipated for workers at the Midnite Mine (which are expected to be less than natural background), can lead to cancer. The estimated risks of cancer for low doses of radiation are based on risk estimates derived from human epidemiologic studies of atomic bomb survivors and, in the case of radon decay products, underground miners decades ago that were exposed to much higher levels than are permitted today. The Radiation safety plan as described in the RPP was developed consistent with the "ALARA philosophy" in that exposures to ionizing radiation should be maintained "As Low as Is Reasonably Achievable (ALARA), social and economic factors taken into account" and that any additional risk associated with radiation exposure is proportional to the dose.

Other potential adverse health effects of chronic radiation exposure include increased risk of genetic mutations and adverse reproductive effects. Genetic effects have been observed in experimental animals exposed to very high doses but not in human populations. Potential effects on the fetus due to irradiation in utero at high doses include increased risk of childhood leukemia and spontaneous abortion. The human epidemiological data show an increased risk of childhood leukemia in children of women exposed to high doses of diagnostic x-rays during pregnancy.

Alpha, beta, and gamma radiation, commonly termed "ionizing radiation", are emitted by uranium decay series radionuclides. Alphas and betas are particulate radiation, i.e. they have mass. Gamma radiation is a form of electromagnetic radiation, similar to x-rays, visible light, and ultraviolet radiation. Of the types of radiation in the electromagnetic spectrum, only x-rays and gamma rays have sufficient energy to ionize atoms; hence they are also termed ionizing radiation.

Alpha radiation penetrates only very short distances, less than 0.1 mm in tissue. Alpha particles are not hazardous outside of the body because all of the energy of the alpha radiation is absorbed by the layer of dead cells on the skin surface. However, alpha emitting radionuclides which are taken into the body by inhalation or ingestion can cause damage by coming in direct contact with live cells. Beta radiation is somewhat more penetrating than alpha radiation and can damage the growth layers of the skin. Gamma rays, like x-rays, are very penetrating, and, depending on the energy can reach any organ in the body.

**Radiotoxicity of Uranium**

All of the uranium isotopes are low specific activity alpha-emitting radionuclides. Natural Uranium, because of its very low specific activity, that is the ratio of activity to mass, when taken into the body via inhalation or ingestion, exhibits chemical toxicity as well as radiotoxicity. For natural uranium, because the levels of radioactivity are so low, its chemical properties (chemotoxicity) are much more important to human health than “radiation dose” (radiotoxicity).

**Chemotoxicity of Uranium**

Uranium, like many heavy~~heady~~ metals (lead, mercury, cadmium, etc.) is chemically toxic. If enough uranium is taken into the body it can cause kidney damage. Due to its chemical toxicity, the amount of soluble uranium that a worker is allowed to inhale in any one week is limited to 10 mg. However, there are no known cases of permanent kidney damage due to occupational intakes of uranium.

**Radiotoxicity of Th-230 and Ra-226**

The target organ for ingested alpha emitters Th-230 and Ra-226 is the bone surface; for inhaled Th-230 and Ra-226 the lung and to a lesser degree the bone are the target organs. Both nuclides have long physical half-lives and, when incorporated into bone remain in the body for many years.

The gamma radiation from the uranium decay series, which presents an external radiation hazard, is generally attributed to Ra-226 although it emits a low energy gamma photon in only a very small percentage of its decays and contributes little to the gamma radiation exposure. The gamma radiation attributed to Ra-226 actually comes from the decay of Pb-214 and Bi-214, short-lived Ra-226 decay products. These two nuclides account for more than 90 percent of the gamma radiation from the uranium decay series. Uranium itself emits a small amount of low energy gamma radiation.

**Radiotoxicity of Rn-222 and its Decay Products**

Radon-222 is a noble gas and presents little health hazard as a gas. However, when it undergoes radioactive decay it forms several short-lived decay products, Po-218, Pb-214, Bi-214, and Po-214. These nuclides are generated in air as individual atoms that attach to existing aerosols that may then be deposited in the lung as particles. Inhalation of radon decay products has been demonstrated to cause lung cancer in underground miners who worked in the mines decades ago and exposed to radon decay product levels 100-1000 times higher than current allowable limits. Many of these early uranium miners were also heavy cigarette smokers. The risk is a function of total dose and dose rate. Smoking and radon are synergistic, i.e. smokers have a greater risk of developing lung cancer due to radon decay product exposure than do non-smokers. No other adverse health effects attributable to inhalation of radon and its decay products have been demonstrated and only in these early underground miners.

Lead-214 and Bi-214 emit gamma radiation as well as beta particles. As noted earlier, they account for more than 90 percent of the gamma radiation from the uranium decay series. The whole body is the "target organ" for external gamma radiation.

### Radiotoxicity of Pb-210 and its Decay Products

Lead-210 is a beta-emitter with a half-life of 22 years. It accumulates in the environment from the decay of Rn-222 in the atmosphere. The target organ for Pb-210 is the bone. The Pb-210 beta particle has a very low energy, thus produces little damage to tissue. However, Pb-210 decays to a short-lived beta emitter, Bi-210, which, in turn, decays to Po-210, an alpha emitter. Bismuth-210 beta particles have moderate energies. As noted previously, alpha and beta radiation can damage tissues in which the radionuclides are deposited as result of ingestion or inhalation. Radiation effects attributed to Pb-210 actually result from the decay of Bi-210 and Po-210. Polonium-210 decays to stable Pb-206, ending the U-238 decay series.

### Effective Dose

The target organs and the doses attributable to these uranium decay series radionuclides are a function of their chemical as well as their radiological characteristics. The target organ and the biological half-life of a nuclide are determined by its chemical form. The effective radiation dose, thus the increased risk, associated with internal deposition (ingestion or inhalation) of these radionuclides is a function of the amount and distribution of energy deposited in tissue, the length of time the nuclide remains in the organ, and the radiosensitivity of the organ.

### ALARA Principle

The system of radiological protection recommended by the International Commission on Radiological Protection (ICRP) incorporates the principle that doses should be kept as low as reasonably achievable (ALARA), economic and social factors being taken into account. The regulations governing facilities licensed by the US Nuclear Regulatory Commission (NRC) define ALARA as "making every reasonable effort to maintain exposures to radiation as far below the dose limits, as is practical consistent with the purpose for which the licensed activity is undertaken." (10 CFR 20) This RPP has been designed to keep radiation doses ALARA.

## BASIC PRINCIPLES OF RADIATION PROTECTION

### Protection against External Radiation

In general, external radiation doses can be minimized by:

Reducing the time spent in the vicinity of the source or in areas with the highest exposure rates (TIME).
Staying as far from the source as practical (DISTANCE).
Placing a shield between the source and the receptor (SHIELDING).

Only the first of the three methods of reducing external radiation dose can be practically applied at the Midnite Mine. Workers should take breaks in areas where exposure rates are close to background levels.

### Protection against Internal Dose

The three major routes of intake for radioactive materials are inhalation, ingestion, and absorption through the skin. Good housekeeping practices including regular conduct of

contamination surveys ,~~(“frisking”),~~ especially prior to eating, drinking, smoking or leaving the Controlled Areas of the, are the best way of preventing intake of radioactive materials.

# ATTACHMENT C
# RAD7 RADON DETECTOR USER MANUAL

# Attachment L-2

# Example Job Safety Analysis

# Attachment L-3

# Safety Compliance Form and Accident Report Form

MIDNITE MINE

EMPLOYEE SAFETY COMPLIANCE AGREEMENT

I,_____(print name) have received a copy of the Health and Safety Plan for the Midnite Mine Project. I have read the plan, understand it, and agree to comply with all of the health and safety requirements. I understand that I may be prohibited from working on the project for violating any of the requirements.

Signature_____Date_____

| ACCIDENT REPORT | | | |
|---|---|---|---|
| Site description | | | Project description |
| Report date | Accident date | | Preparer's name |
| Name and affiliation of injured person | | | Social security number |
| | | | Age |
| | | | Years of service/experience |
| | | | Time present on Site |
| | | | Title/classification |

Severity of injury

□ no medical attention □ medical attention □ non-disabling □ disabling □ fatality

Classification of injury

| | | | |
|---|---|---|---|
| □ fractures | □ bites | □ toxic respiratory exposure | □ faint/dizziness |
| □ dislocations | □ heat burns | □ toxic ingestion | □ dermal allergy |
| □ sprains | □ chemical burns | □ cold exposure | |
| □ abrasions | □ concussion | □ frostbite | |
| □ lacerations | □ bruises | □ heat stroke | |
| □ punctures | □ blisters | □ heat exhaustion | |

| Part of body affected | Degree if disability |
|---|---|
| Data medical care was received | Place where medical care was received |

Location of accident

Causative agent most directly related to accident (e.g., object, substance, material, machinery, equipment conditions)

Was weather a factor?
□ YES
□ NO

Unsafe mechanical/physical/environmental conditions at the time of the accident (be specific)

| ACCIDENT REPORT (continued) | |
|---|---|
| Unsafe act by injured and/or others contributing to the accident (be specific) | |
| Personal factors (e.g., improper attitude, lack of knowledge or skill, slow reaction, fatigue) | |
| Level of personal protective equipment required in the site-specific health and safety plan for this activity | |
| What can be done to prevent the reoccurrence of this type of injury? | |
| Witnesses to accident | Preparer's signature |
| | Health and Safety Officer's signature |
| DETAILED NARRATIVE DESCRIPTION OF ACCIDENT (How and why did the accident happen? What tools, circumstances or assigned duties contributed to the accident? Be specific. Use additional sheets if necessary). | |

# Attachment L-4

# Hospital Route Map