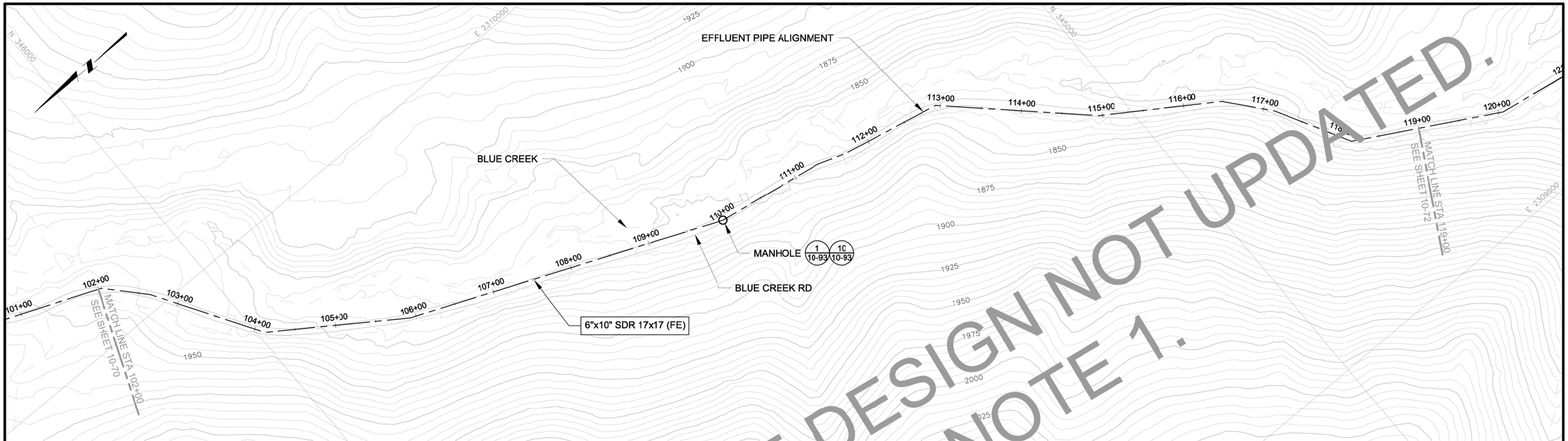

PLAN

0 60' 120'

CONTOUR INTERVAL = 5'

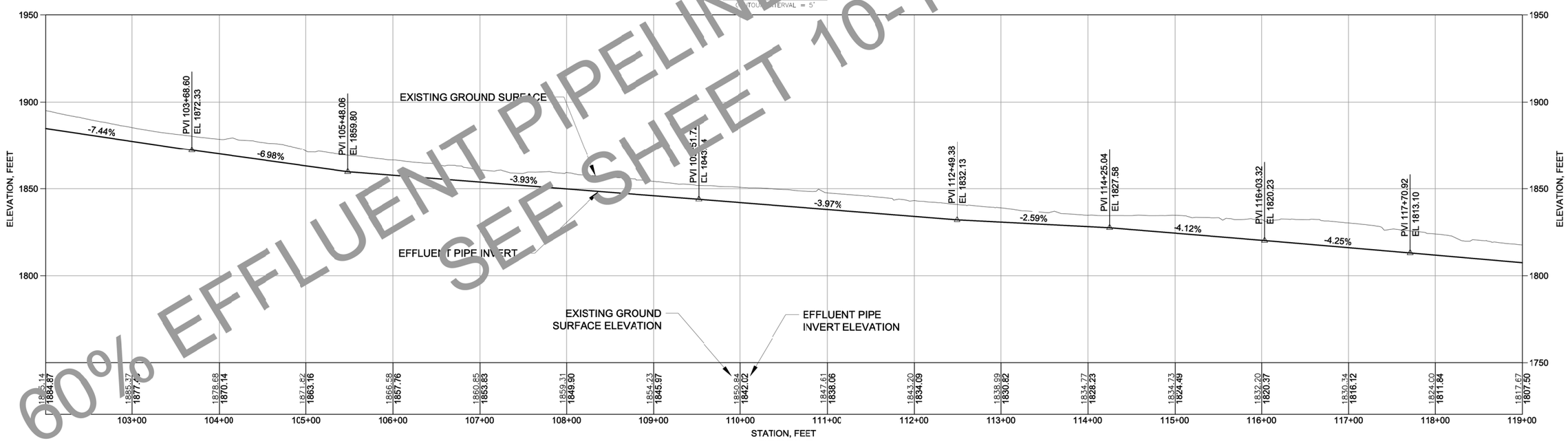

PROFILE

VERTICAL 0 30' 60' HORIZONTAL 0 60' 120'

VERTICAL EXAGGERATION = 2X

60% EFFLUENT PIPELINE DESIGN NOT UPDATED.
SEE SHEET 10-1 NOTE 1.

ISSUE	REV	DESCRIPTION	TECH	ENG	DATE
----		----	----	----	----
1		ISSUED FOR 60% DESIGN	DM	JD	12-13
0		ISSUED FOR 30% DESIGN	DM	JD	12-12

DISCLAIMER:
THIS DRAWING WAS DEVELOPED THROUGH THE APPLICATION OF PROFESSIONAL ENGINEERING SKILL AND PROPRIETARY METHODOLOGIES, PROCESSES AND KNOW HOW OF MWH AS AUTHOR ALL PURSUANT TO THE TERMS OF A CONTRACTUAL SCOPE OF WORK GOVERNING ITS PREPARATION. THIS DRAWING MAY NOT BE USED OR MODIFIED OTHER THAN IN STRICT ACCORDANCE WITH THE TERMS OF THE GOVERNING CONTRACT AND SCOPE OF WORK OR OTHERWISE ABSENT THE INVOLVEMENT AND CONSENT OF THE AUTHOR. ANY ALTERATION OR ADAPTATION OF THIS DRAWING SHALL BE CONSISTENT WITH THE AUTHOR'S CONTRACTUAL AND PROPRIETARY RIGHTS AND BE AT USER'S SOLE RISK AND WITHOUT ANY LIABILITY OR LEGAL RESPONSIBILITY OF MWH.

DRAWING REFERENCE(S):
- EXISTING TOPOGRAPHY BASED UPON LIDAR MAPPING BY SPATIAL INTEL 2010. WASHINGTON STATE PLANE-NORTH, NAD83/NAVD88.

DESIGNED BY	J DIXON	12-13
DRAWN BY	D MIRANDA	12-13
CHECKED BY	T KELLEY	12-13
APPROVED BY	C STRACHAN	12-13
PROJECT MANAGER	V DRAIN	12-13

NEWMONT

PROJECT LOCATION: WELLPINIT, WASHINGTON

PROJECT: MIDNITE MINE

TITLE: EFFLUENT PIPELINE PLAN AND PROFILE STATION 102+00 TO 119+00

MWH

SHEET 10-71 | REVISION 1

FILE NAME 10-60 | DATE DEC 2103

C:\workdir\dms01409\10-60

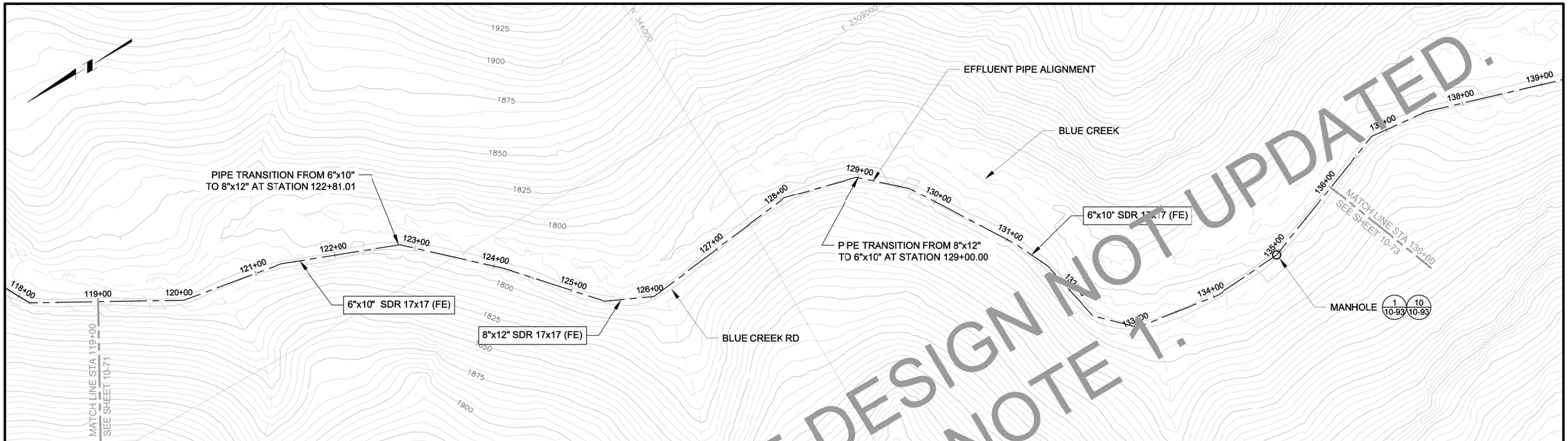

PLAN

0 60' 120'

CONTOUR INTERVAL = 5'

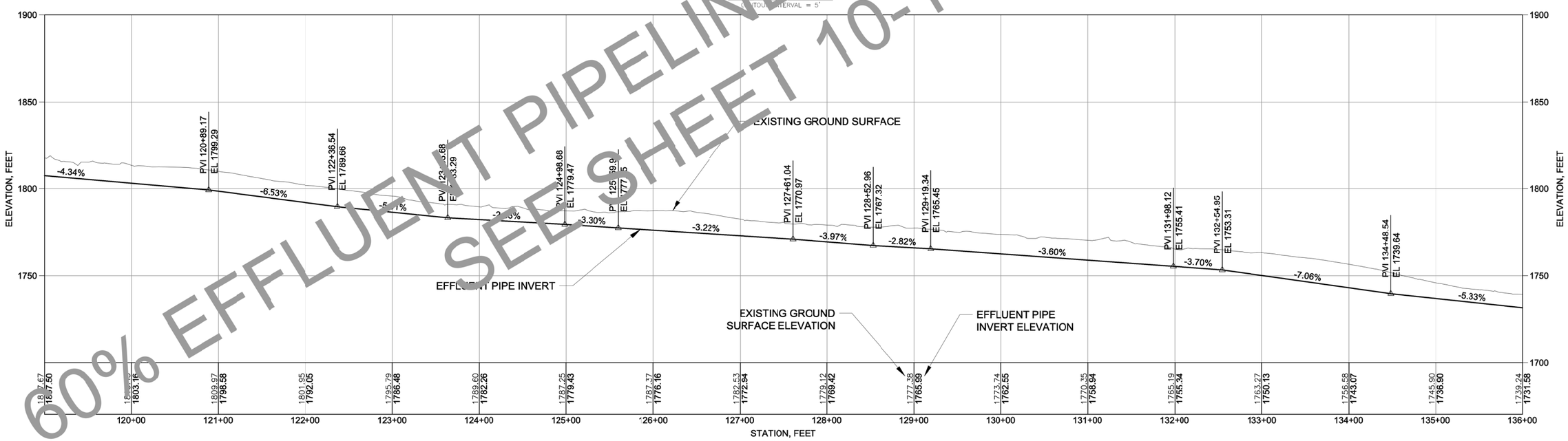

PROFILE

VERTICAL 0 30' 60' HORIZONTAL 0 60' 120'

VERTICAL EXAGGERATION = 2X

60% EFFLUENT PIPELINE DESIGN NOT UPDATED. SEE SHEET 10-71 NOTE 1.

ISSUE REV	DESCRIPTION	TECH	ENG	DATE
----	----	----	----	----
1	ISSUED FOR 60% DESIGN	DM	JD	12-13
0	ISSUED FOR 30% DESIGN	DM	JD	12-12

DISCLAIMER:
THIS DRAWING WAS DEVELOPED THROUGH THE APPLICATION OF PROFESSIONAL ENGINEERING SKILL AND PROPRIETARY METHODOLOGIES, PROCESSES AND KNOW HOW OF MWH AS AUTHOR ALL PURSUANT TO THE TERMS OF A CONTRACTUAL SCOPE OF WORK GOVERNING ITS PREPARATION. THIS DRAWING MAY NOT BE USED OR MODIFIED OTHER THAN IN STRICT ACCORDANCE WITH THE TERMS OF THE GOVERNING CONTRACT AND SCOPE OF WORK OR OTHERWISE ABSENT THE INVOLVEMENT AND CONSENT OF THE AUTHOR. ANY ALTERATION OR ADAPTATION OF THIS DRAWING SHALL BE CONSISTENT WITH THE AUTHOR'S CONTRACTUAL AND PROPRIETARY RIGHTS AND BE AT USER'S SOLE RISK AND WITHOUT ANY LIABILITY OR LEGAL RESPONSIBILITY OF MWH.

DRAWING REFERENCE(S):
- EXISTING TOPOGRAPHY BASED UPON LIDAR MAPPING BY SPATIAL INTEL 2010. WASHINGTON STATE PLANE-NORTH, NAD83/NAVD88.

DESIGNED BY	J DIXON	12-13
DRAWN BY	D MIRANDA	12-13
CHECKED BY	T KELLEY	12-13
APPROVED BY	C STRACHAN	12-13
PROJECT MANAGER	V DRAIN	12-13

NEWMONT

PROJECT LOCATION: WELLPINIT, WASHINGTON

PROJECT: MIDNITE MINE

TITLE: EFFLUENT PIPELINE PLAN AND PROFILE STATION 119+00 TO 136+00

MWH

SHEET 10-72 | REVISION 1

FILE NAME 10-60 | DATE DEC 2013

C:\workdir\dms01409\10-60

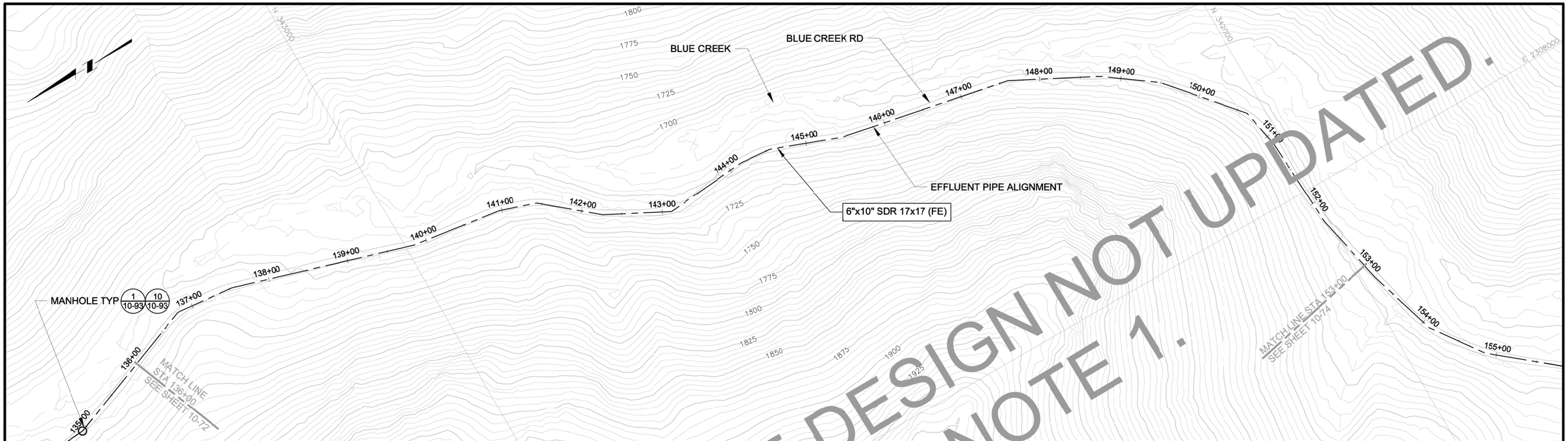

PLAN

0 60' 120'

CONTOUR INTERVAL = 5'

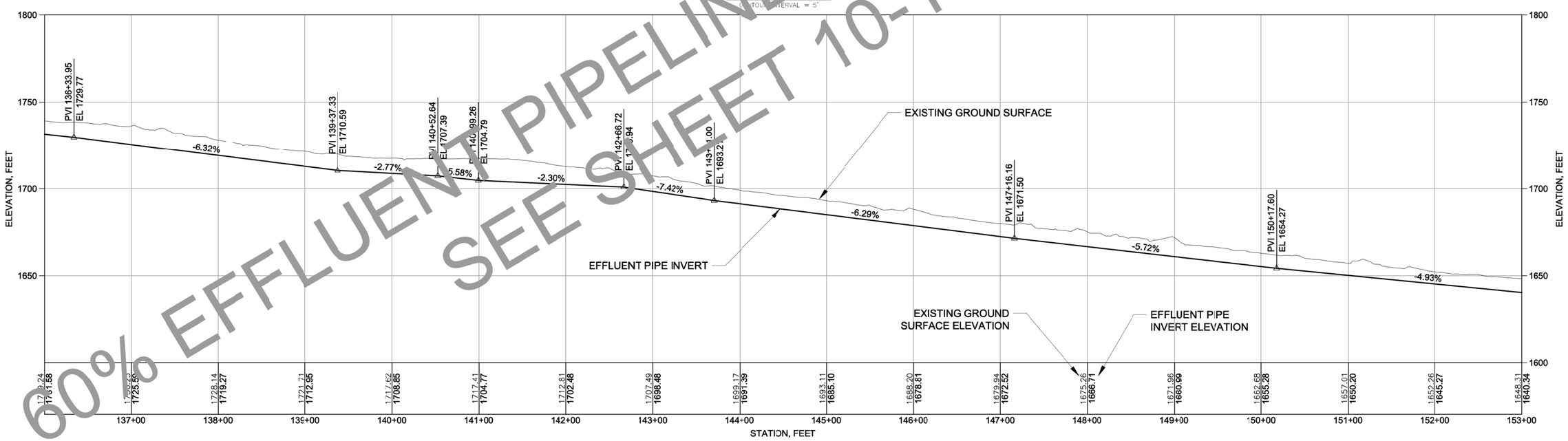

PROFILE

VERTICAL 0 30' 60' HORIZONTAL 0 60' 120'

VERTICAL EXAGGERATION = 2X

60% EFFLUENT PIPELINE DESIGN NOT UPDATED. SEE SHEET 10-71 NOTE 1.

REV	DESCRIPTION	TECH	ENG	DATE
1	ISSUED FOR 60% DESIGN	DM	JD	12–13
0	ISSUED FOR 30% DESIGN	DM	JD	12–12

DISCLAIMER:
THIS DRAWING WAS DEVELOPED THROUGH THE APPLICATION OF PROFESSIONAL ENGINEERING SKILL AND PROPRIETARY METHODOLOGIES, PROCESSES AND KNOW HOW OF MWH AS AUTHOR ALL PURSUANT TO THE TERMS OF A CONTRACTUAL SCOPE OF WORK GOVERNING ITS PREPARATION. THIS DRAWING MAY NOT BE USED OR MODIFIED OTHER THAN IN STRICT ACCORDANCE WITH THE TERMS OF THE GOVERNING CONTRACT AND SCOPE OF WORK OR OTHERWISE ABSENT THE INVOLVEMENT AND CONSENT OF THE AUTHOR. ANY ALTERATION OR ADAPTATION OF THIS DRAWING SHALL BE CONSISTENT WITH THE AUTHOR'S CONTRACTUAL AND PROPRIETARY RIGHTS AND BE AT USER'S SOLE RISK AND WITHOUT ANY LIABILITY OR LEGAL RESPONSIBILITY OF MWH.

DRAWING REFERENCE(S):
- EXISTING TOPOGRAPHY BASED UPON LIDAR MAPPING BY SPATIAL INTEL 2010. WASHINGTON STATE PLANE–NORTH, NAD83/NAVD88.

DESIGNED BY	J DIXON	12–13
DRAWN BY	D MIRANDA	12–13
CHECKED BY	T KELLEY	12–13
APPROVED BY	C STRACHAN	12–13
PROJECT MANAGER	V DRAIN	12–13

NEWMONT

PROJECT LOCATION: WELLPINIT, WASHINGTON
PROJECT: MIDNITE MINE
TITLE: EFFLUENT PIPELINE PLAN AND PROFILE STATION 136+00 TO 153+00

MWH

SHEET 10-73
REVISION 1
FILE NAME 10-60
DATE DEC 2013

C:\workdir\dms01409\10-60

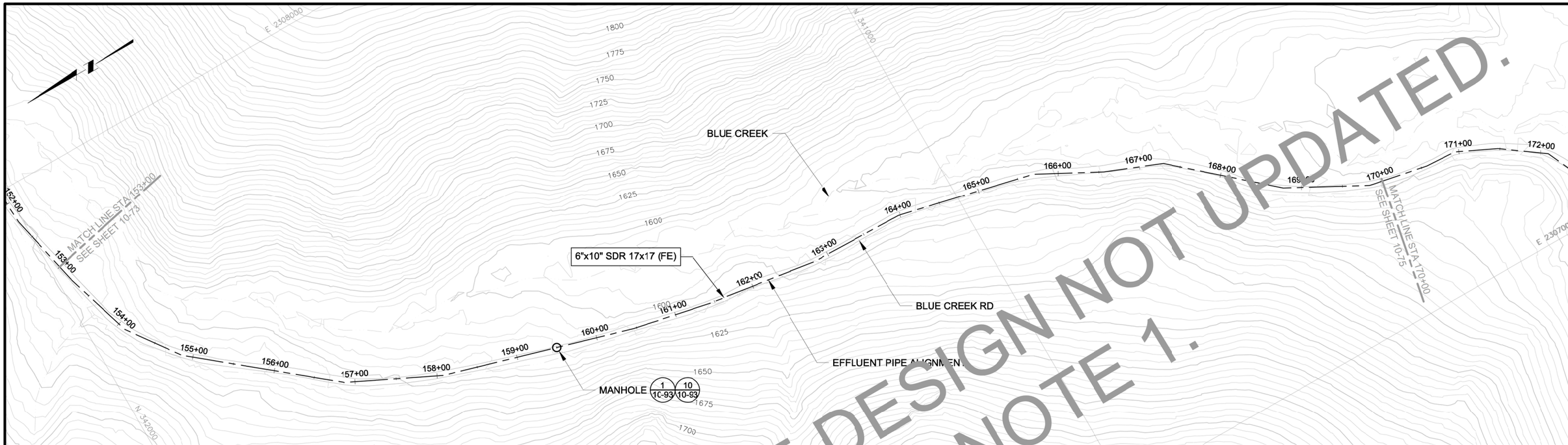

PLAN

0 60' 120'

CONTOUR INTERVAL = 5'

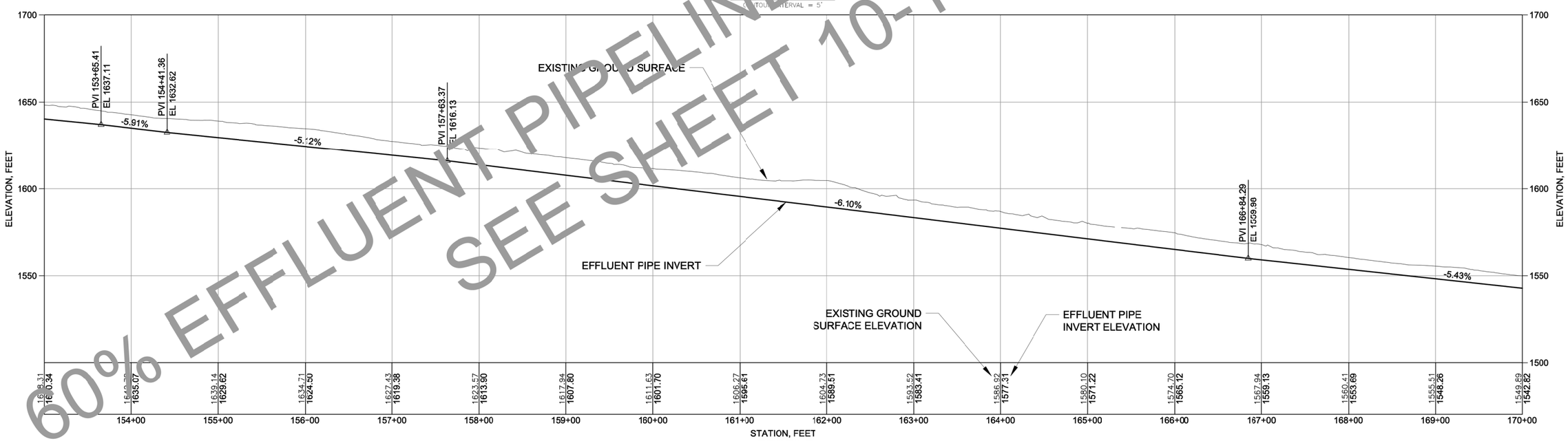

PROFILE

VERTICAL 0 30' 60'

HORIZONTAL 0 60' 120'

VERTICAL EXAGGERATION = 2X

60% EFFLUENT PIPELINE DESIGN NOT UPDATED.
SEE SHEET 10-1 NOTE 1.

REV	DESCRIPTION	TECH	ENG	DATE
1	ISSUED FOR 60% DESIGN	DM	JD	12–13
0	ISSUED FOR 30% DESIGN	DM	JD	11–12

DISCLAIMER:
THIS DRAWING WAS DEVELOPED THROUGH THE APPLICATION OF PROFESSIONAL ENGINEERING SKILL AND PROPRIETARY METHODOLOGIES, PROCESSES AND KNOW HOW OF MWH AS AUTHOR ALL PURSUANT TO THE TERMS OF A CONTRACTUAL SCOPE OF WORK GOVERNING ITS PREPARATION. THIS DRAWING MAY NOT BE USED OR MODIFIED OTHER THAN IN STRICT ACCORDANCE WITH THE TERMS OF THE GOVERNING CONTRACT AND SCOPE OF WORK OR OTHERWISE ABSENT THE INVOLVEMENT AND CONSENT OF THE AUTHOR. ANY ALTERATION OR ADAPTATION OF THIS DRAWING SHALL BE CONSISTENT WITH THE AUTHOR'S CONTRACTUAL AND PROPRIETARY RIGHTS AND BE AT USER'S SOLE RISK AND WITHOUT ANY LIABILITY OR LEGAL RESPONSIBILITY OF MWH.

DRAWING REFERENCE(S):
- EXISTING TOPOGRAPHY BASED UPON LIDAR MAPPING BY SPATIAL INTEL 2010. WASHINGTON STATE PLANE–NORTH, NAD83/NAVD88.

DESIGNED BY	S MCMANUS	12–13
DRAWN BY	D MIRANDA	12–13
CHECKED BY	T KELLEY	12–13
APPROVED BY	C STRACHAN	12–13
PROJECT MANAGER	V DRAIN	12–13

NEWMONT

PROJECT LOCATION: WELLPINIT, WASHINGTON

PROJECT: MIDNITE MINE

TITLE: EFFLUENT PIPELINE PLAN AND PROFILE STATION 153+00 TO 170+00

MWH

SHEET 10-74 | REVISION 1

FILE NAME 10-60 | DATE DEC 2013

C:\workdir\dms01409\10-60

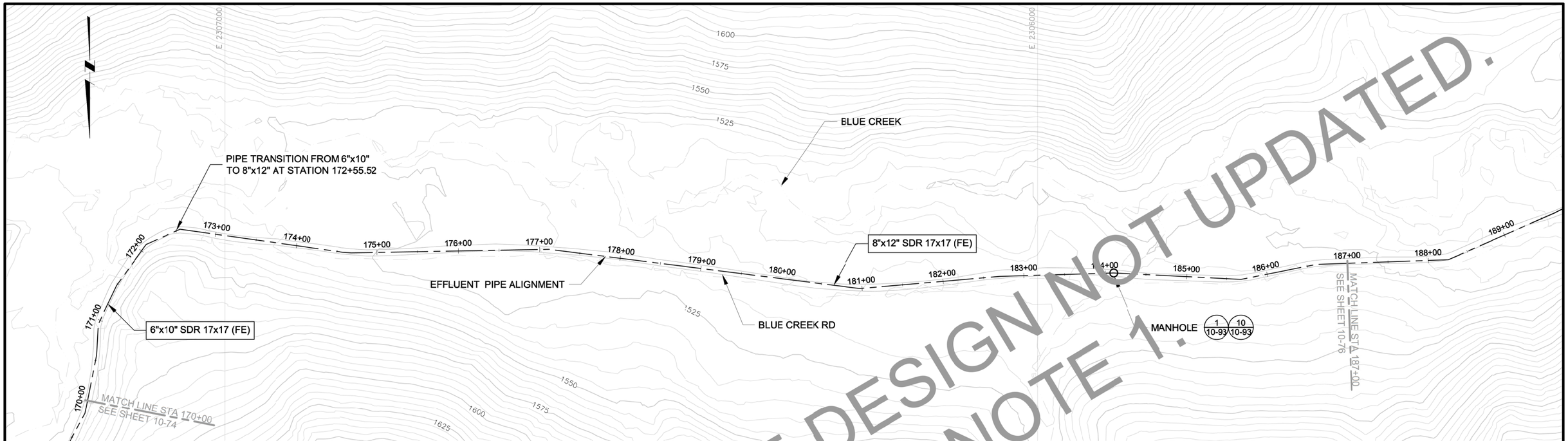

PLAN

0 60' 120'

CONTOUR INTERVAL = 5'

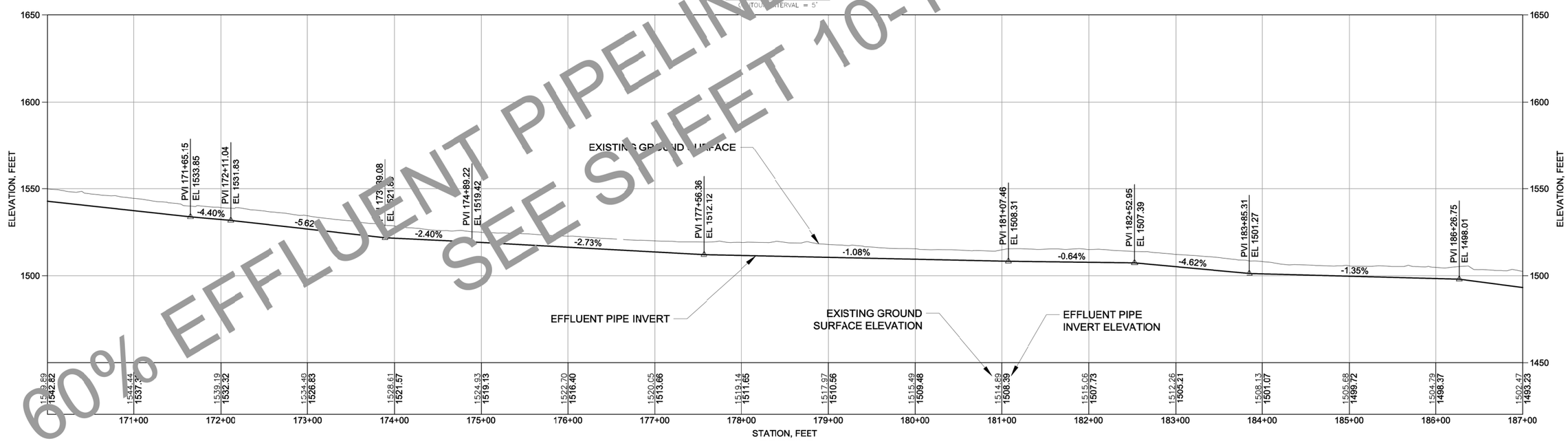

PROFILE

VERTICAL 0 30' 60' HORIZONTAL 0 60' 120'

VERTICAL EXAGGERATION = 2X

60% EFFLUENT PIPELINE DESIGN NOT UPDATED.
SEE SHEET 10-1 NOTE 1.

REV	DESCRIPTION	TECH	ENG	DATE
1	ISSUED FOR 60% DESIGN	DM	JD	12–13
0	ISSUED FOR 30% DESIGN	DM	JD	12–12

DISCLAIMER:
THIS DRAWING WAS DEVELOPED THROUGH THE APPLICATION OF PROFESSIONAL ENGINEERING SKILL AND PROPRIETARY METHODOLOGIES, PROCESSES AND KNOW HOW OF MWH AS AUTHOR ALL PURSUANT TO THE TERMS OF A CONTRACTUAL SCOPE OF WORK GOVERNING ITS PREPARATION. THIS DRAWING MAY NOT BE USED OR MODIFIED OTHER THAN IN STRICT ACCORDANCE WITH THE TERMS OF THE GOVERNING CONTRACT AND SCOPE OF WORK OR OTHERWISE ABSENT THE INVOLVEMENT AND CONSENT OF THE AUTHOR. ANY ALTERATION OR ADAPTATION OF THIS DRAWING SHALL BE CONSISTENT WITH THE AUTHOR'S CONTRACTUAL AND PROPRIETARY RIGHTS AND BE AT USER'S SOLE RISK AND WITHOUT ANY LIABILITY OR LEGAL RESPONSIBILITY OF MWH.

DRAWING REFERENCE(S):
- EXISTING TOPOGRAPHY BASED UPON LIDAR MAPPING BY SPATIAL INTEL, 2010, WASHINGTON STATE PLANE–NORTH, NAD83/NAVD88.

DESIGNED BY	J DIXON	12–13
DRAWN BY	D MIRANDA	12–13
CHECKED BY	T KELLEY	12–13
APPROVED BY	C STRACHAN	12–13
PROJECT MANAGER	V DRAIN	12–13

NEWMONT

PROJECT LOCATION: WELLPINIT, WASHINGTON
PROJECT: MIDNITE MINE
TITLE: EFFLUENT PIPELINE PLAN AND PROFILE STATION 170+00 TO 187+00

MWH

SHEET 10-75
REVISION 1
FILE NAME 10-60
DATE DEC 2013

C:\workdir\dms01409\10-60

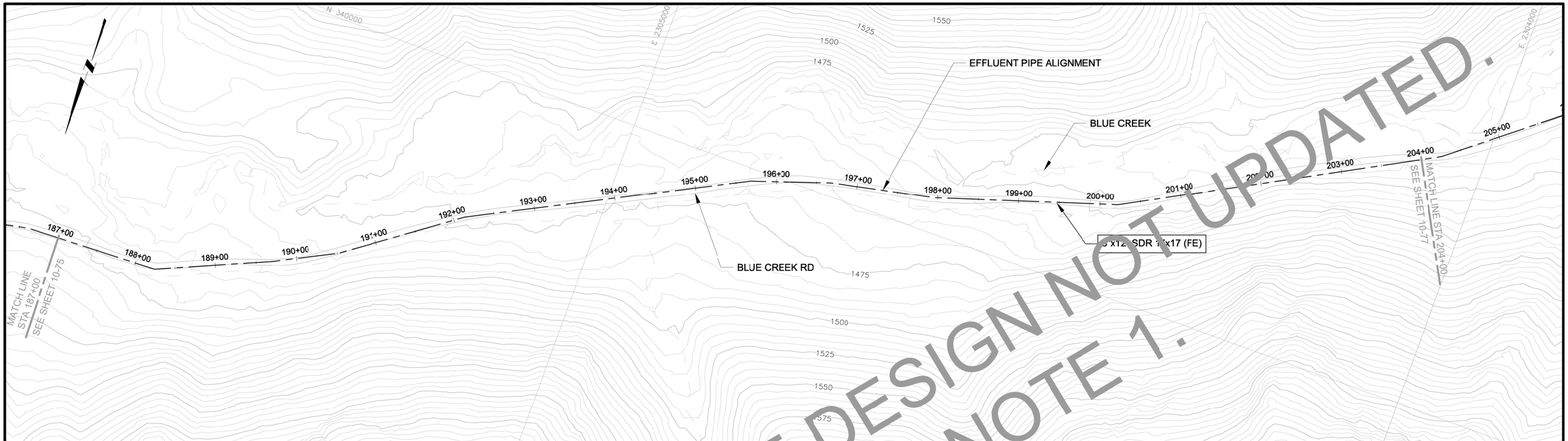

PLAN

0 60' 120'

CONTOUR INTERVAL = 5'

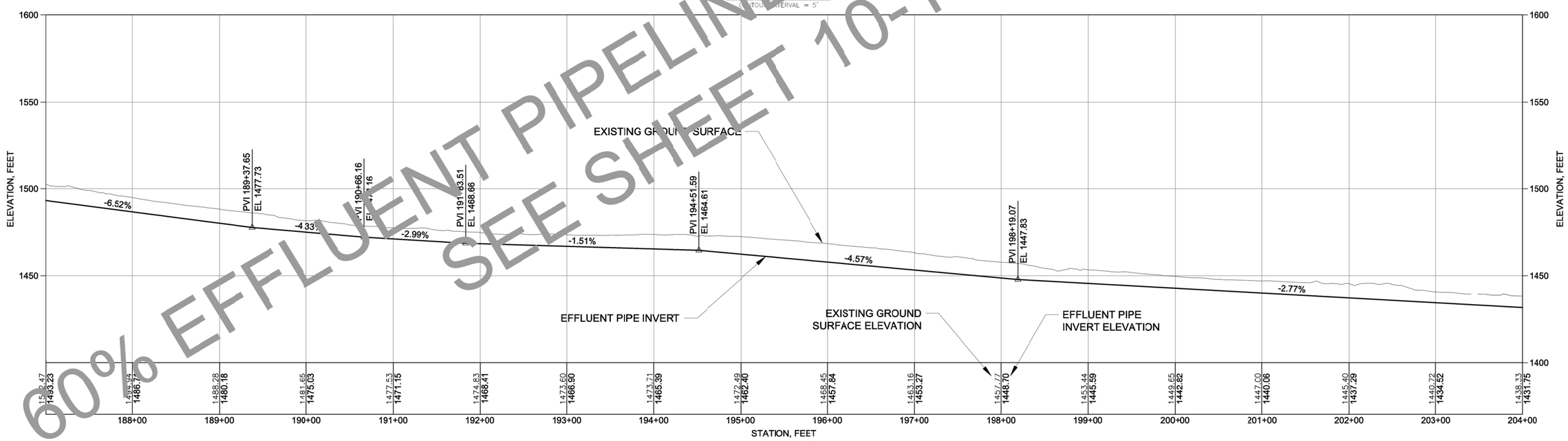

PROFILE

VERTICAL 0 30' 60' HORIZONTAL 0 60' 120'

VERTICAL EXAGGERATION = 2X

60% EFFLUENT PIPELINE DESIGN NOT UPDATED.
SEE SHEET 10-1 NOTE 1.

REV	DESCRIPTION	TECH	ENG	DATE
1	ISSUED FOR 60% DESIGN	DM	JD	12–13
0	ISSUED FOR 30% DESIGN	DM	JD	12–12

ISSUE

DISCLAIMER:
THIS DRAWING WAS DEVELOPED THROUGH THE APPLICATION OF PROFESSIONAL ENGINEERING SKILL AND PROPRIETARY METHODOLOGIES, PROCESSES AND KNOW HOW OF MWH AS AUTHOR ALL PURSUANT TO THE TERMS OF A CONTRACTUAL SCOPE OF WORK GOVERNING ITS PREPARATION. THIS DRAWING MAY NOT BE USED OR MODIFIED OTHER THAN IN STRICT ACCORDANCE WITH THE TERMS OF THE GOVERNING CONTRACT AND SCOPE OF WORK OR OTHERWISE ABSENT THE INVOLVEMENT AND CONSENT OF THE AUTHOR. ANY ALTERATION OR ADAPTATION OF THIS DRAWING SHALL BE CONSISTENT WITH THE AUTHOR'S CONTRACTUAL AND PROPRIETARY RIGHTS AND BE AT USER'S SOLE RISK AND WITHOUT ANY LIABILITY OR LEGAL RESPONSIBILITY OF MWH.

DRAWING REFERENCE(S):
- EXISTING TOPOGRAPHY BASED UPON LIDAR MAPPING BY SPATIAL INTEL 2010. WASHINGTON STATE PLANE–NORTH, NAD83/NAVD88.

DESIGNED BY	J DIXON	12–13
DRAWN BY	D MIRANDA	12–13
CHECKED BY	T KELLEY	12–13
APPROVED BY	C STRACHAN	12–13
PROJECT MANAGER	V DRAIN	12–13

NEWMONT

PROJECT LOCATION: WELLPINIT, WASHINGTON
PROJECT: MIDNITE MINE
TITLE: EFFLUENT PIPELINE PLAN AND PROFILE STATION 187+00 TO 204+00

MWH

SHEET 10-76
REVISION 1
FILE NAME 10-60
DATE DEC 2013

C:\workdir\dms01409\10-60

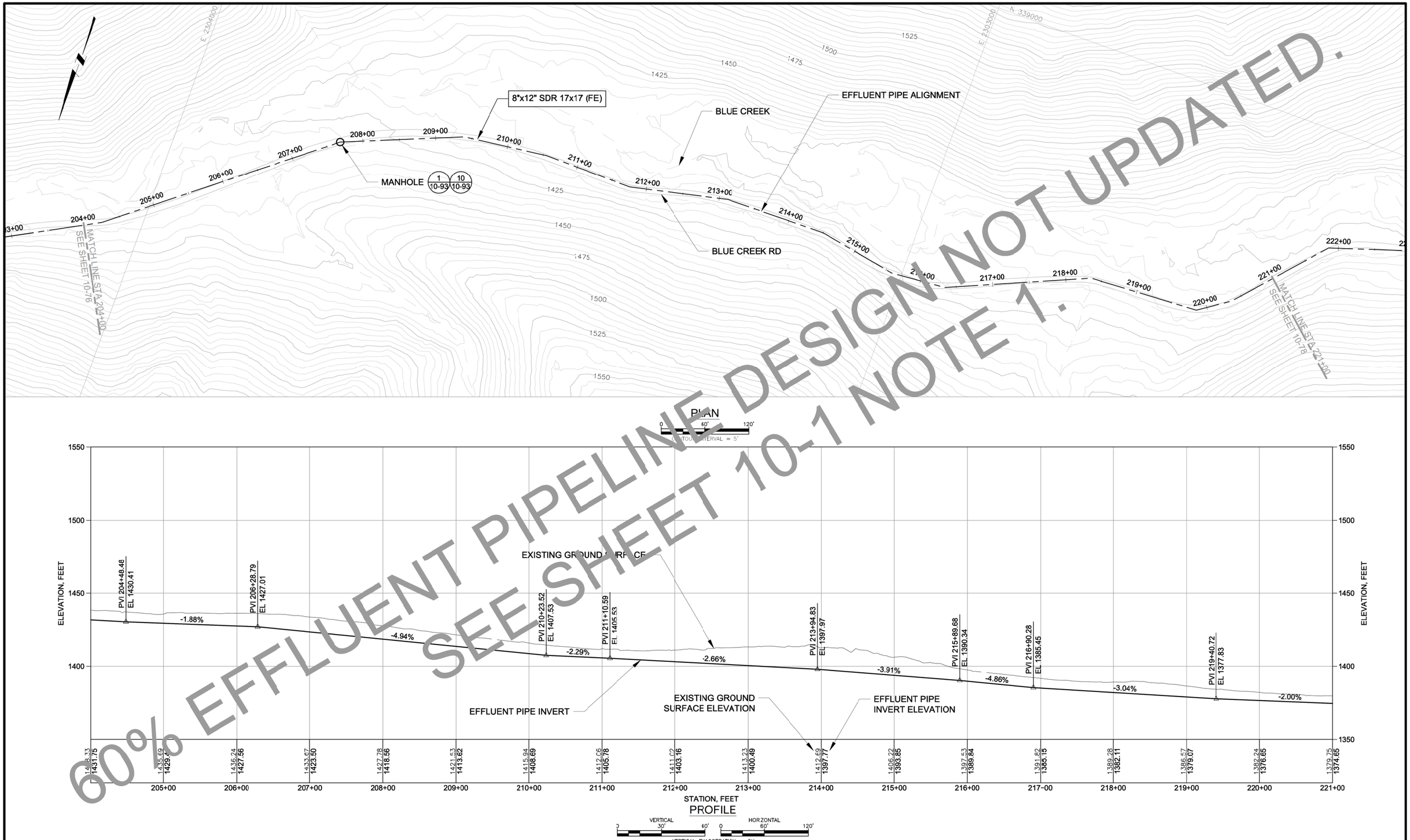

60% EFFLUENT PIPELINE DESIGN NOT UPDATED.
SEE SHEET 10-1 NOTE 1.

REV	DESCRIPTION	TECH	ENG	DATE
1	ISSUED FOR 60% DESIGN	DM	JD	12–13
0	ISSUED FOR 30% DESIGN	DM	JD	12–12

DISCLAIMER:
THIS DRAWING WAS DEVELOPED THROUGH THE APPLICATION OF PROFESSIONAL ENGINEERING SKILL AND PROPRIETARY METHODOLOGIES, PROCESSES AND KNOW HOW OF MWH AS AUTHOR ALL PURSUANT TO THE TERMS OF A CONTRACTUAL SCOPE OF WORK GOVERNING ITS PREPARATION. THIS DRAWING MAY NOT BE USED OR MODIFIED OTHER THAN IN STRICT ACCORDANCE WITH THE TERMS OF THE GOVERNING CONTRACT AND SCOPE OF WORK OR OTHERWISE ABSENT THE INVOLVEMENT AND CONSENT OF THE AUTHOR. ANY ALTERATION OR ADAPTATION OF THIS DRAWING SHALL BE CONSISTENT WITH THE AUTHOR'S CONTRACTUAL AND PROPRIETARY RIGHTS AND BE AT USER'S SOLE RISK AND WITHOUT ANY LIABILITY OR LEGAL RESPONSIBILITY OF MWH.

DRAWING REFERENCE(S):
- EXISTING TOPOGRAPHY BASED UPON LIDAR MAPPING BY SPATIAL INTEL 2010. WASHINGTON STATE PLANE–NORTH, NAD83/NAVD88.

DESIGNED BY	J DIXON	12–13
DRAWN BY	D MIRANDA	12–13
CHECKED BY	T KELLEY	12–13
APPROVED BY	C STRACHAN	12–13
PROJECT MANAGER	V DRAIN	12–13

NEWMONT

PROJECT LOCATION: WELLPINIT, WASHINGTON
PROJECT: MIDNITE MINE
TITLE: EFFLUENT PIPELINE PLAN AND PROFILE STATION 204+00 TO 221+00

MWH

SHEET 10-77
REVISION 1
FILE NAME 10-60
DATE DEC 2013

C:\workdir\dms01409\10-60

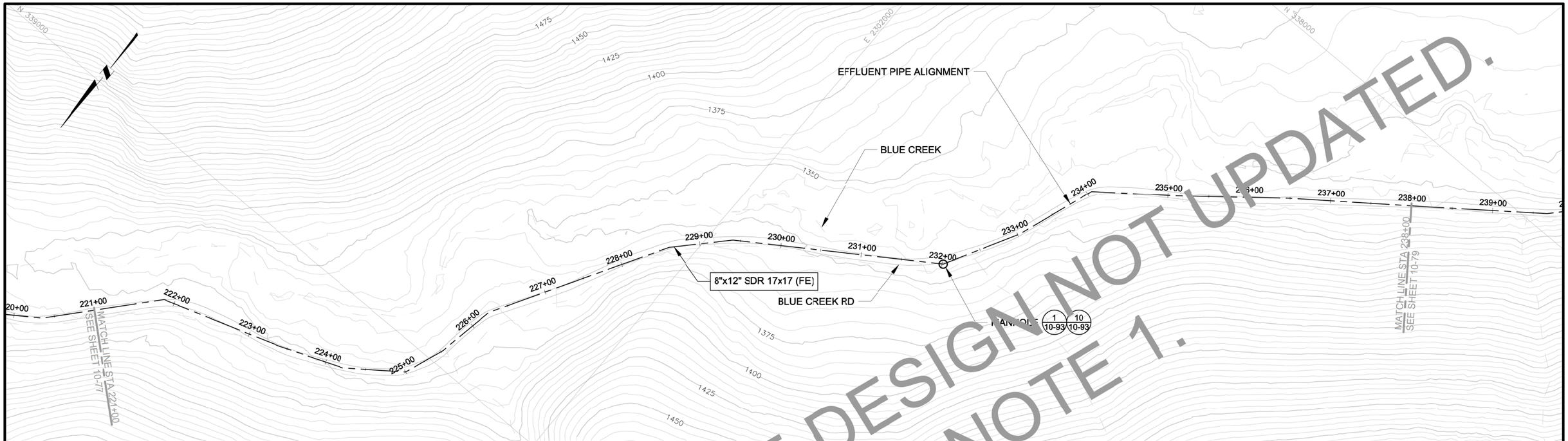

PLAN

0 60' 120'

CONTOUR INTERVAL = 5'

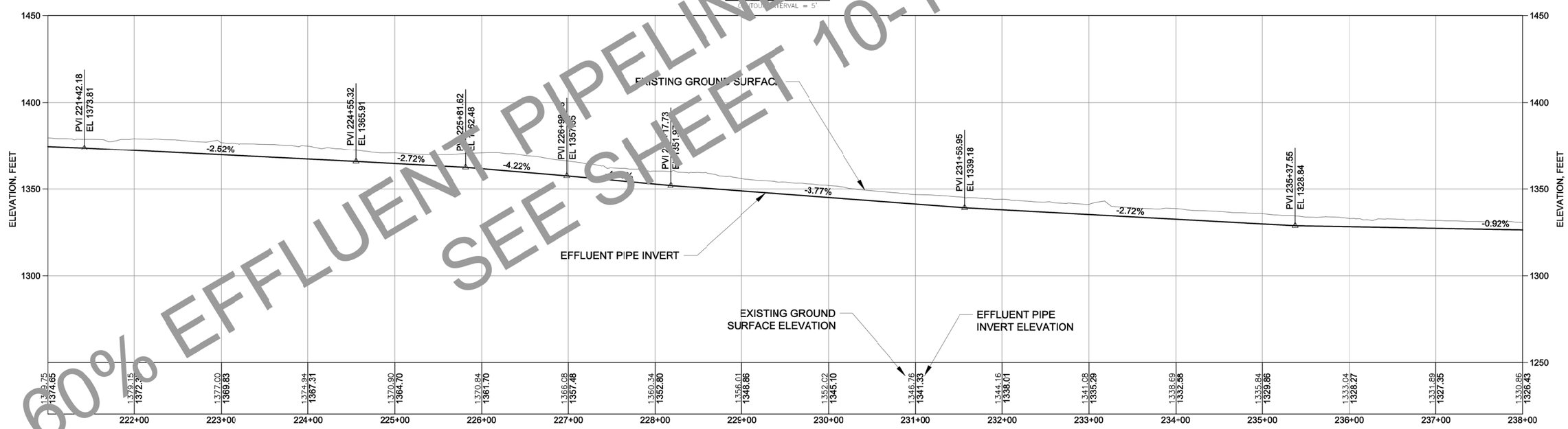

PROFILE

VERTICAL 0 30' 60'

HORIZONTAL 0 60' 120'

VERTICAL EXAGGERATION = 2X

60% EFFLUENT PIPELINE DESIGN NOT UPDATED.
SEE SHEET 10-1 NOTE 1.

REV	DESCRIPTION	TECH	ENG	DATE
1	ISSUED FOR 60% DESIGN	DM	JD	12–13
0	ISSUED FOR 30% DESIGN	DM	JD	12–12

DISCLAIMER:
THIS DRAWING WAS DEVELOPED THROUGH THE APPLICATION OF PROFESSIONAL ENGINEERING SKILL AND PROPRIETARY METHODOLOGIES, PROCESSES AND KNOW HOW OF MWH AS AUTHOR ALL PURSUANT TO THE TERMS OF A CONTRACTUAL SCOPE OF WORK GOVERNING ITS PREPARATION. THIS DRAWING MAY NOT BE USED OR MODIFIED OTHER THAN IN STRICT ACCORDANCE WITH THE TERMS OF THE GOVERNING CONTRACT AND SCOPE OF WORK OR OTHERWISE ABSENT THE INVOLVEMENT AND CONSENT OF THE AUTHOR. ANY ALTERATION OR ADAPTATION OF THIS DRAWING SHALL BE CONSISTENT WITH THE AUTHOR'S CONTRACTUAL AND PROPRIETARY RIGHTS AND BE AT USER'S SOLE RISK AND WITHOUT ANY LIABILITY OR LEGAL RESPONSIBILITY OF MWH.

DRAWING REFERENCE(S):
- EXISTING TOPOGRAPHY BASED UPON LIDAR MAPPING BY SPATIAL INTEL, 2010. WASHINGTON STATE PLANE–NORTH, NAD83/NAVD88.

DESIGNED BY	J DIXON	12–13
DRAWN BY	D MIRANDA	12–13
CHECKED BY	T KELLEY	12–13
APPROVED BY	C STRACHAN	12–13
PROJECT MANAGER	V DRAIN	12–13

NEWMONT

PROJECT LOCATION: WELLPINIT, WASHINGTON

PROJECT: MIDNITE MINE

TITLE: EFFLUENT PIPELINE PLAN AND PROFILE STATION 221+00 TO 238+00

MWH

SHEET 10-78

REVISION 1

FILE NAME 10-60

DATE DEC 2013

C:\workdir\dms01409\10-60

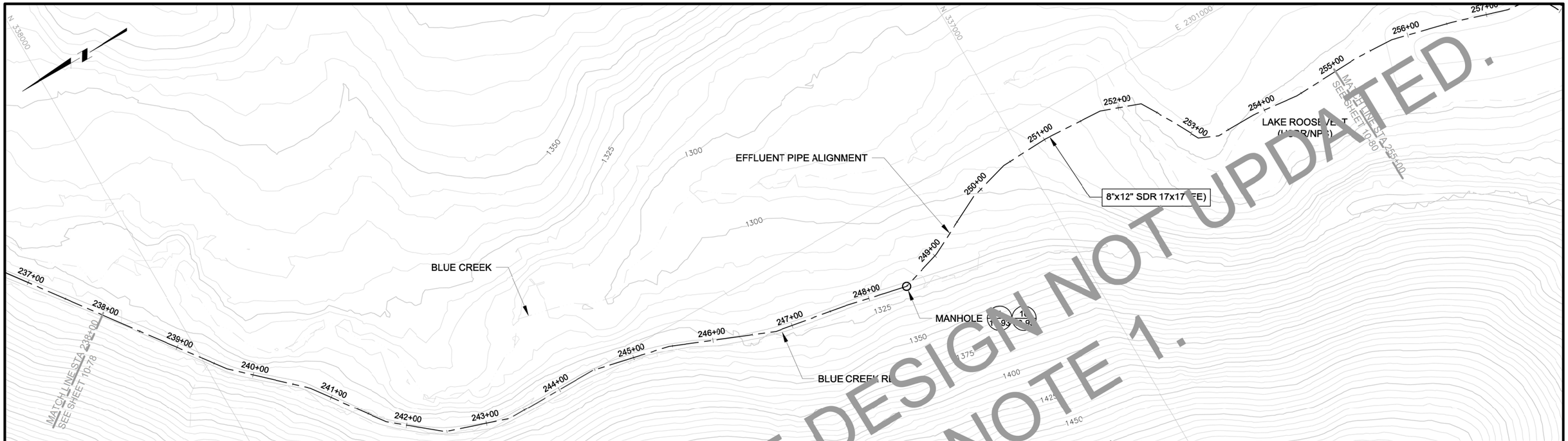

PLAN

0 60' 120'

CONTOUR INTERVAL = 5'

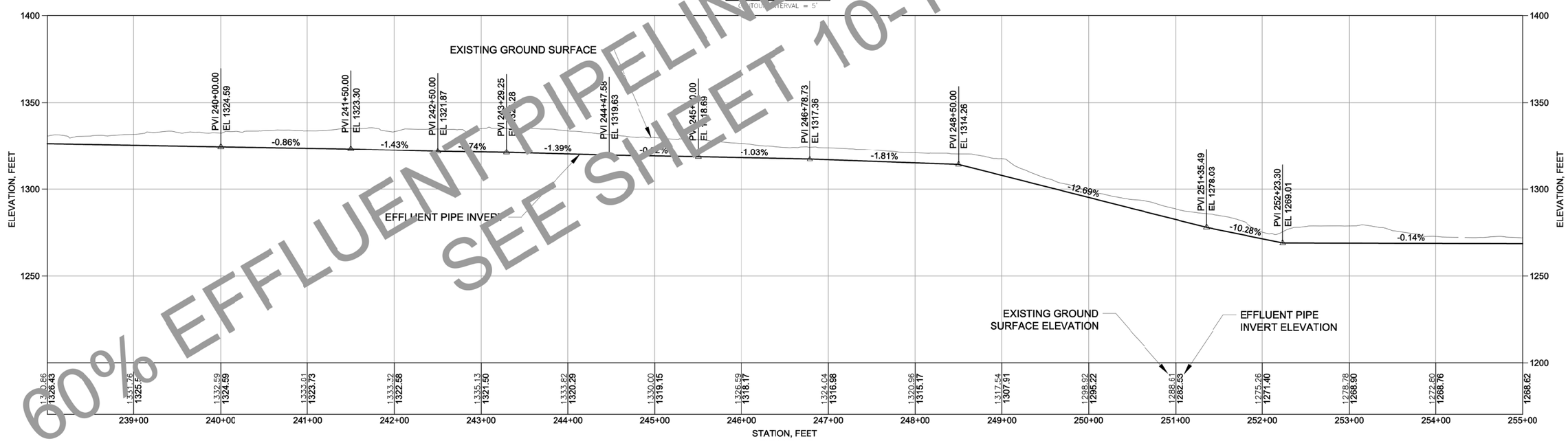

PROFILE

VERTICAL 0 30' 60' HORIZONTAL 0 50' 120'

VERTICAL EXAGGERATION = 2X

60% EFFLUENT PIPELINE DESIGN NOT UPDATED.
SEE SHEET 10-1 NOTE 1.

REV	DESCRIPTION	TECH	ENG	DATE
1	ISSUED FOR 60% DESIGN	DM	JD	12–13
0	ISSUED FOR 30% DESIGN	DM	JD	12–12

DISCLAIMER:
THIS DRAWING WAS DEVELOPED THROUGH THE APPLICATION OF PROFESSIONAL ENGINEERING SKILL AND PROPRIETARY METHODOLOGIES, PROCESSES AND KNOW HOW OF MWH AS AUTHOR ALL PURSUANT TO THE TERMS OF A CONTRACTUAL SCOPE OF WORK GOVERNING ITS PREPARATION. THIS DRAWING MAY NOT BE USED OR MODIFIED OTHER THAN IN STRICT ACCORDANCE WITH THE TERMS OF THE GOVERNING CONTRACT AND SCOPE OF WORK OR OTHERWISE ABSENT THE INVOLVEMENT AND CONSENT OF THE AUTHOR. ANY ALTERATION OR ADAPTATION OF THIS DRAWING SHALL BE CONSISTENT WITH THE AUTHOR'S CONTRACTUAL AND PROPRIETARY RIGHTS AND BE AT USER'S SOLE RISK AND WITHOUT ANY LIABILITY OR LEGAL RESPONSIBILITY OF MWH.

DRAWING REFERENCE(S):
- EXISTING TOPOGRAPHY BASED UPON LIDAR MAPPING BY SPATIAL INTEL 2010. WASHINGTON STATE PLANE–NORTH, NAD83/NAVD88.

DESIGNED BY	J DIXON	12–13
DRAWN BY	D MIRANDA	12–13
CHECKED BY	T KELLEY	12–13
APPROVED BY	C STRACHAN	12–13
PROJECT MANAGER	V DRAIN	12–13

NEWMONT

PROJECT LOCATION: WELLPINIT, WASHINGTON
PROJECT: MIDNITE MINE
TITLE: EFFLUENT PIPELINE PLAN AND PROFILE STATION 238+00 TO 255+00

MWH

SHEET 10-79
REVISION 1
FILE NAME 10-60
DATE DEC 2013

C:\workdir\dms01409\10-60

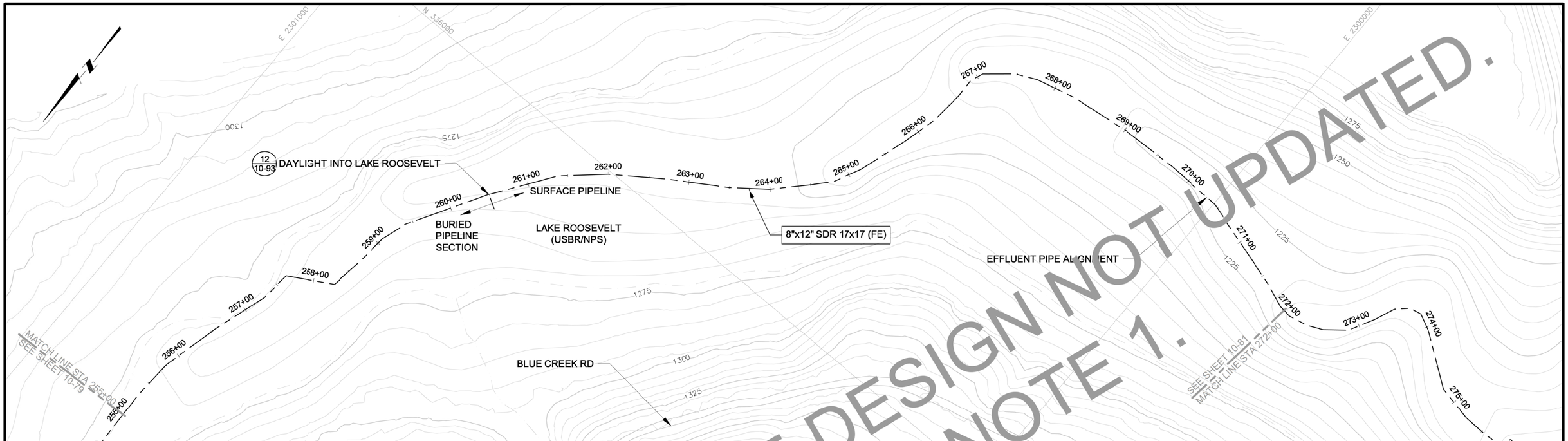

PLAN

0 60' 120'

CONTOUR INTERVAL = 5'

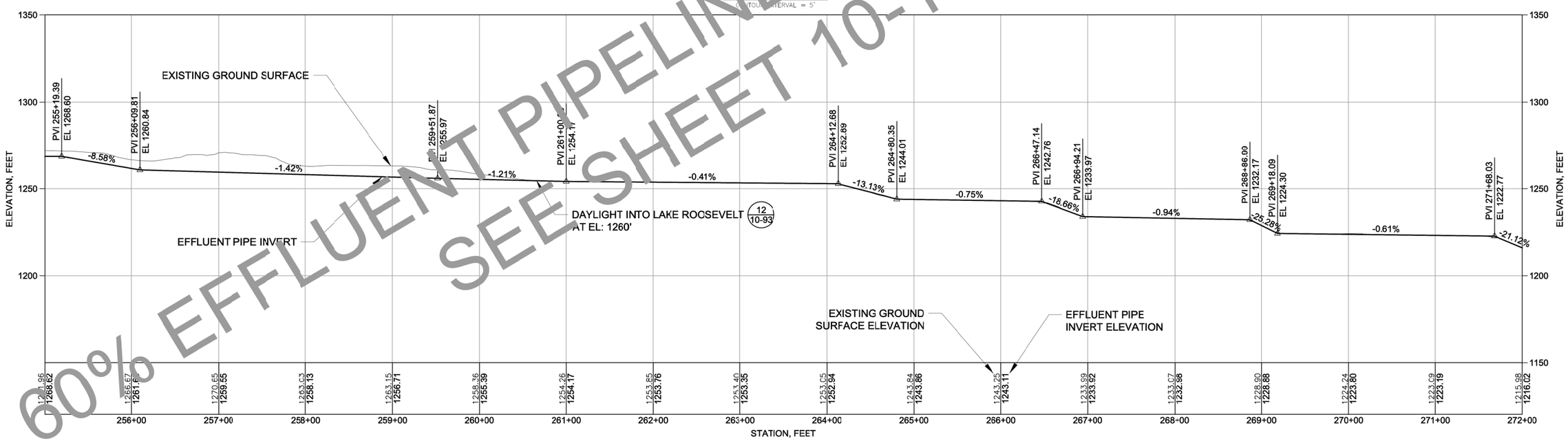

PROFILE

VERTICAL 0 30' 60' HORIZONTAL 0 60' 120'

VERTICAL EXAGGERATION = 2X

60% EFFLUENT PIPELINE DESIGN NOT UPDATED.
SEE SHEET 10-1 NOTE 1.

REV	DESCRIPTION	TECH	ENG	DATE
1	ISSUED FOR 60% DESIGN	DM	JD	12–13
0	ISSUED FOR 30% DESIGN	DM	JD	12–12

ISSUE

DISCLAIMER:
THIS DRAWING WAS DEVELOPED THROUGH THE APPLICATION OF PROFESSIONAL ENGINEERING SKILL AND PROPRIETARY METHODOLOGIES, PROCESSES AND KNOW HOW OF MWH AS AUTHOR ALL PURSUANT TO THE TERMS OF A CONTRACTUAL SCOPE OF WORK GOVERNING ITS PREPARATION. THIS DRAWING MAY NOT BE USED OR MODIFIED OTHER THAN IN STRICT ACCORDANCE WITH THE TERMS OF THE GOVERNING CONTRACT AND SCOPE OF WORK OR OTHERWISE ABSENT THE INVOLVEMENT AND CONSENT OF THE AUTHOR. ANY ALTERATION OR ADAPTATION OF THIS DRAWING SHALL BE CONSISTENT WITH THE AUTHOR'S CONTRACTUAL AND PROPRIETARY RIGHTS AND BE AT USER'S SOLE RISK AND WITHOUT ANY LIABILITY OR LEGAL RESPONSIBILITY OF MWH.

DRAWING REFERENCE(S):
- EXISTING TOPOGRAPHY BASED UPON LIDAR MAPPING BY SPATIAL INTEL 2010. WASHINGTON STATE PLANE–NORTH, NAD83/NAVD88.

DESIGNED BY	J DIXON	12–13
DRAWN BY	D MIRANDA	12–13
CHECKED BY	T KELLEY	12–13
APPROVED BY	C STRACHAN	12–13
PROJECT MANAGER	V DRAIN	12–13

NEWMONT

PROJECT LOCATION: WELLPINIT, WASHINGTON
PROJECT: MIDNITE MINE
TITLE: EFFLUENT PIPELINE PLAN AND PROFILE STATION 255+00 TO 272+00

MWH

SHEET 10-80
REVISION 1
FILE NAME 10-60
DATE DEC 2013

C:\workdir\dms01409\10-60

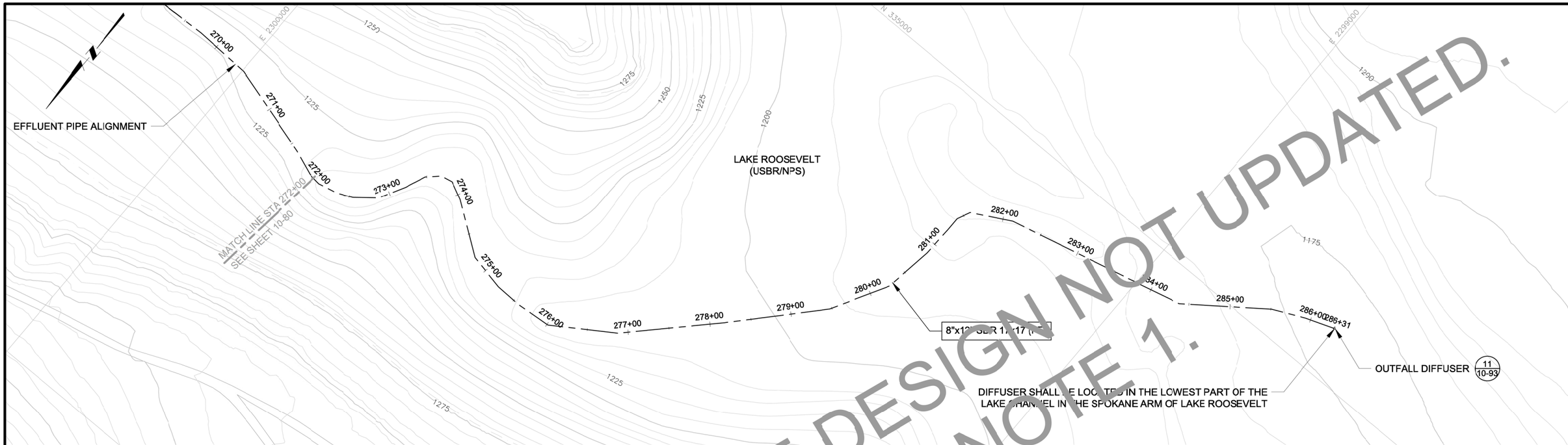

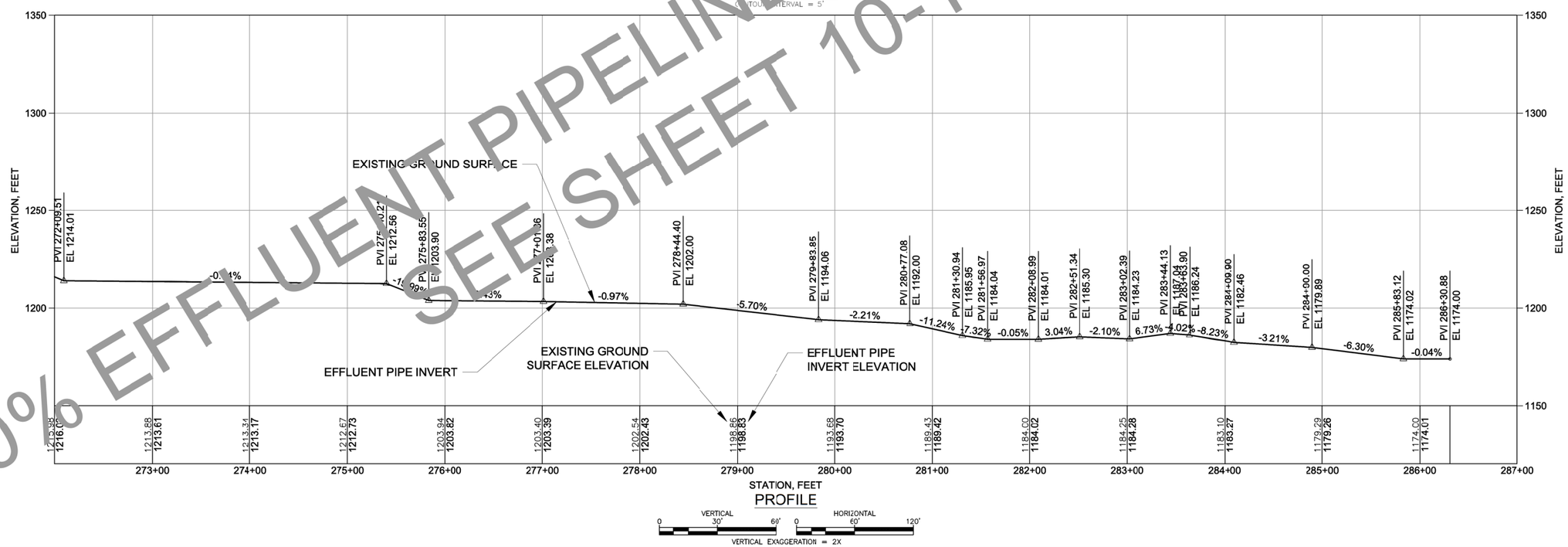

60% EFFLUENT PIPELINE DESIGN NOT UPDATED.
SEE SHEET 10-1 NOTE 1.

REV	DESCRIPTION	TECH	ENG	DATE
1	ISSUED FOR 60% DESIGN	DM	JD	12–13
0	ISSUED FOR 30% DESIGN	DM	JD	12–12

ISSUE

DISCLAIMER:
THIS DRAWING WAS DEVELOPED THROUGH THE APPLICATION OF PROFESSIONAL ENGINEERING SKILL AND PROPRIETARY METHODOLOGIES, PROCESSES AND KNOW HOW OF MWH AS AUTHOR ALL PURSUANT TO THE TERMS OF A CONTRACTUAL SCOPE OF WORK GOVERNING ITS PREPARATION. THIS DRAWING MAY NOT BE USED OR MODIFIED OTHER THAN IN STRICT ACCORDANCE WITH THE TERMS OF THE GOVERNING CONTRACT AND SCOPE OF WORK OR OTHERWISE ABSENT THE INVOLVEMENT AND CONSENT OF THE AUTHOR. ANY ALTERATION OR ADAPTATION OF THIS DRAWING SHALL BE CONSISTENT WITH THE AUTHOR'S CONTRACTUAL AND PROPRIETARY RIGHTS AND BE AT USER'S SOLE RISK AND WITHOUT ANY LIABILITY OR LEGAL RESPONSIBILITY OF MWH.

DRAWING REFERENCE(S):
- EXISTING TOPOGRAPHY BASED UPON LIDAR MAPPING BY SPATIAL INTEL 2010. WASHINGTON STATE PLANE–NORTH, NAD83/NAVD88.

DESIGNED BY	J DIXON	12–13
DRAWN BY	D MIRANDA	12–13
CHECKED BY	T KELLEY	12–13
APPROVED BY	C STRACHAN	12–13
PROJECT MANAGER	V DRAIN	12–13

NEWMONT

PROJECT LOCATION: WELLPINIT, WASHINGTON
PROJECT: MIDNITE MINE
TITLE: EFFLUENT PIPELINE PLAN AND PROFILE
STATION 272+00 TO END

MWH

SHEET 10-81
REVISION 1
FILE NAME 10-60
DATE DEC 2013

C:\workdir\dms01409\10-60

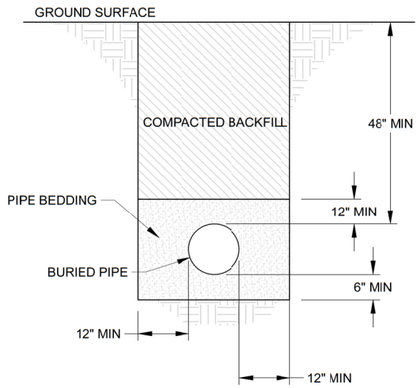

NOTE:

1. PIPE BURIAL PER THIS DETAIL APPLIES TO BURIED PIPELINES SHOWN IN SECTION 10.

1 / 10-82 TRENCH AND PIPE BURIAL TYPICAL SECTION
NOT TO SCALE

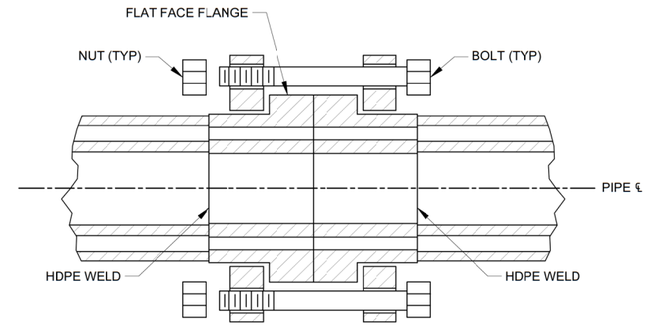

PLAN

2 / 10-82 DUAL CONTAINED PIPE FLANGE DETAIL
NOT TO SCALE

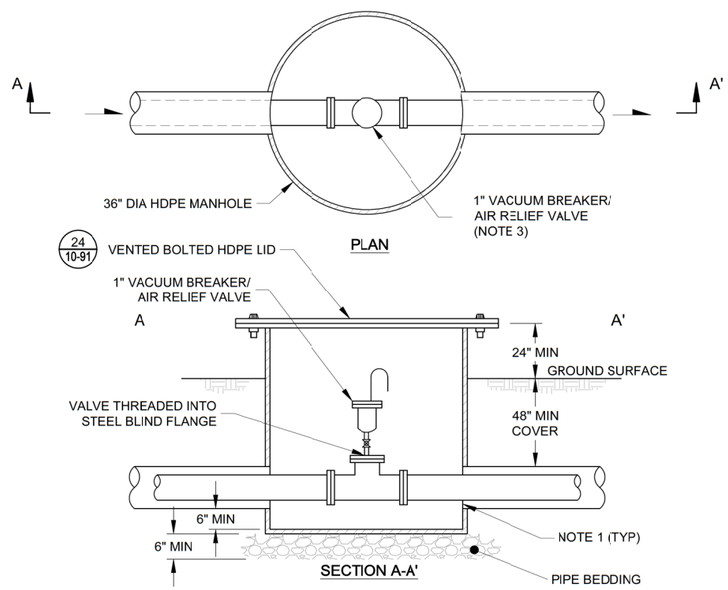

NOTES:

1. ANNULUS OF DUAL PIPE SHALL ALLOW FLOW TO ENTER THE VALVE BOX.
2. SEE PLAN AND PROFILE FOR PIPE SIZE.
3. VACUUM BREAKER/AIR RELIEF VALVE NOT SHOWN IN PLAN VIEW FOR CLARITY.

3 / 10-82 AIR/VACUUM RELIEF VALVE BOX DETAIL
NOT TO SCALE

ISSUE REV	DESCRIPTION	TECH	ENG	DATE
3	ISSUED FOR 100% DESIGN	KR	JD	06–15
2	ISSUED FOR 90% DESIGN	MC	JD	07–14

DISCLAIMER:
THIS DRAWING WAS DEVELOPED THROUGH THE APPLICATION OF PROFESSIONAL ENGINEERING SKILL AND PROPRIETARY METHODOLOGIES, PROCESSES AND KNOW HOW OF MWH AS AUTHOR ALL PURSUANT TO THE TERMS OF A CONTRACTUAL SCOPE OF WORK GOVERNING ITS PREPARATION. THIS DRAWING MAY NOT BE USED OR MODIFIED OTHER THAN IN STRICT ACCORDANCE WITH THE TERMS OF THE GOVERNING CONTRACT AND SCOPE OF WORK OR OTHERWISE ABSENT THE INVOLVEMENT AND CONSENT OF THE AUTHOR. ANY ALTERATION OR ADAPTATION OF THIS DRAWING SHALL BE CONSISTENT WITH THE AUTHOR'S CONTRACTUAL AND PROPRIETARY RIGHTS AND BE AT USER'S SOLE RISK AND WITHOUT ANY LIABILITY OR LEGAL RESPONSIBILITY OF MWH.

DESIGNED BY	J DIXON	06–15
DRAWN BY	K REED	06–15
CHECKED BY	T KELLEY	06–15
APPROVED BY	C STRACHAN	06–15
PROJECT MANAGER	V DRAIN	06–15

NEWMONT

PROJECT LOCATION: WELLPINIT, WASHINGTON
PROJECT: MIDNITE MINE
TITLE: TYPICAL DETAILS AND SECTIONS (SHEET 1 OF 12)

MWH

SHEET: 10-82
REVISION: 3
FILE NAME: 10-77
DATE: JUNE 2015

pw:\\omerpwint03.mwhglobal.com:AM_PROJECTS03\Documents\FTC2_Newmont\Midnight Mine\RD-RA\013-Sheet Set\2015-01-01 BODR\10_WTP n PIPES\10-77.dwg

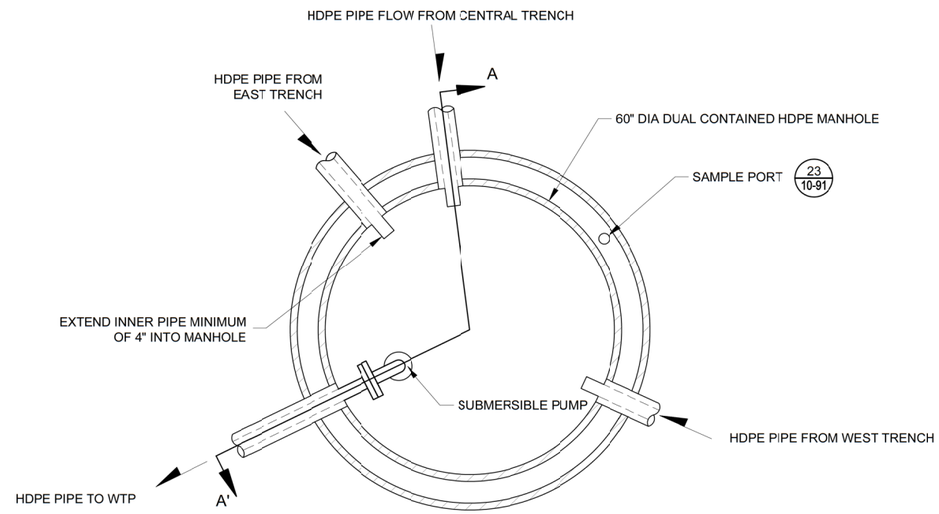

PLAN

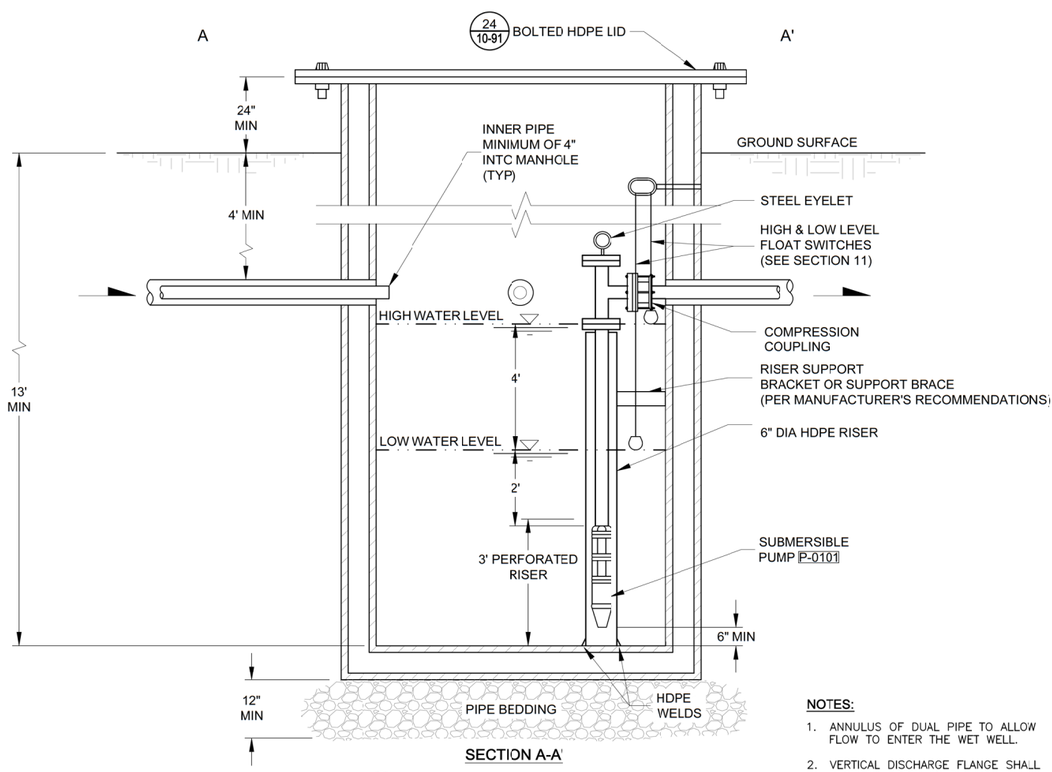

SECTION A-A'

4
10-83
TRENCHES WET WELL DETAIL
NOT TO SCALE

NOTES:

1. ANNULUS OF DUAL PIPE TO ALLOW FLOW TO ENTER THE WET WELL.
2. VERTICAL DISCHARGE FLANGE SHALL REST ON HDPE RISER.

ISSUE REV	DESCRIPTION	TECH	ENG	DATE
3	ISSUED FOR 100% DESIGN	KR	JD	06–15
2	ISSUED FOR 90% DESIGN	MC	JD	07–14

DISCLAIMER:
THIS DRAWING WAS DEVELOPED THROUGH THE APPLICATION OF PROFESSIONAL ENGINEERING SKILL AND PROPRIETARY METHODOLOGIES, PROCESSES AND KNOW HOW OF MWH AS AUTHOR ALL PURSUANT TO THE TERMS OF A CONTRACTUAL SCOPE OF WORK GOVERNING ITS PREPARATION. THIS DRAWING MAY NOT BE USED OR MODIFIED OTHER THAN IN STRICT ACCORDANCE WITH THE TERMS OF THE GOVERNING CONTRACT AND SCOPE OF WORK OR OTHERWISE ABSENT THE INVOLVEMENT AND CONSENT OF THE AUTHOR. ANY ALTERATION OR ADAPTATION OF THIS DRAWING SHALL BE CONSISTENT WITH THE AUTHOR'S CONTRACTUAL AND PROPRIETARY RIGHTS AND BE AT USER'S SOLE RISK AND WITHOUT ANY LIABILITY OR LEGAL RESPONSIBILITY OF MWH.

DESIGNED BY	J DIXON	06–15
DRAWN BY	K REED	06–15
CHECKED BY	T KELLEY	06–15
APPROVED BY	C STRACHAN	06–15
PROJECT MANAGER	V DRAIN	06–15

NEWMONT

PROJECT LOCATION: WELLPINIT, WASHINGTON

PROJECT: MIDNITE MINE

TITLE: TYPICAL DETAILS AND SECTIONS (SHEET 2 OF 12)

MWH

SHEET: 10-83 | REVISION: 3

FILE NAME: 10-77 | DATE: JUNE 2015

pw:\\amerpwint03.mwhglobal.com:AM_PROJECTS03\Documents\FTC2_Newmont\Midnight Mine\R0-RA\013-Sheet Set\2015-01-01 BOOR\10_WTP n PIPES\10-77.dwg

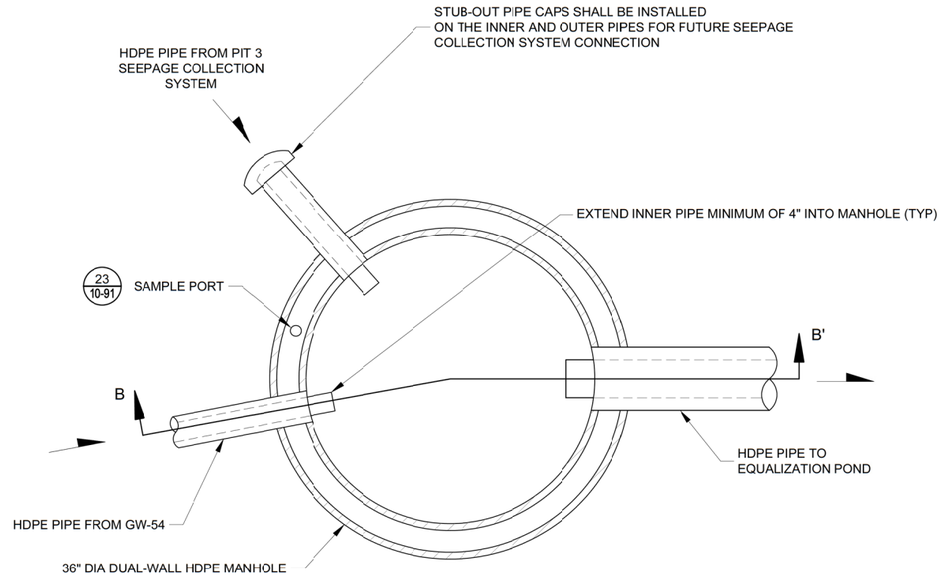

PLAN

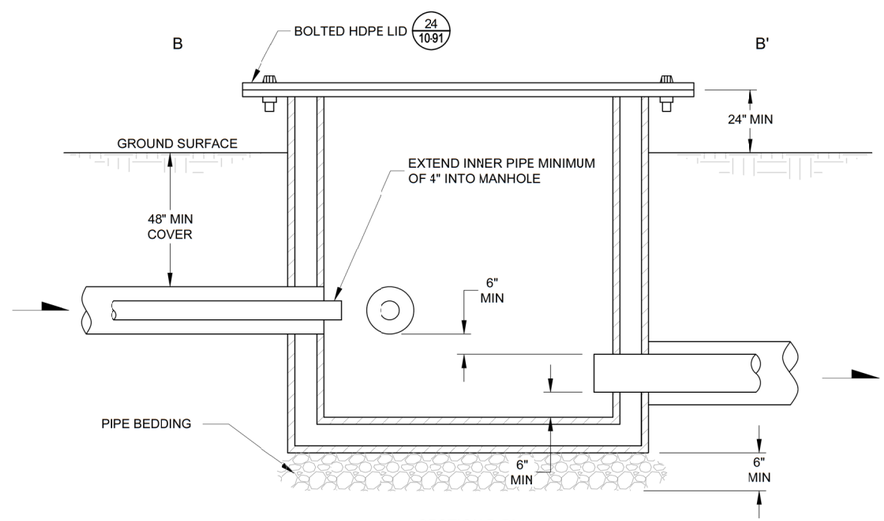

SECTION B-B'

NOTES:

1. ANNULUS OF DUAL PIPES TO ALLOW FLOW INTO THE WET WELL.
2. OUTER WALL OF OUTLET PIPE WILL TERMINATE AT THE INNER WALL OF THE WET WELL.

5 / 10-84 GW-54 WET WELL DETAIL

NOT TO SCALE

ISSUE REV	DESCRIPTION	TECH	ENG	DATE
3	ISSUED FOR 100% DESIGN	KR	JD	06–15
2	ISSUED FOR 90% DESIGN	MC	JD	07–14

DISCLAIMER:
THIS DRAWING WAS DEVELOPED THROUGH THE APPLICATION OF PROFESSIONAL ENGINEERING SKILL AND PROPRIETARY METHODOLOGIES, PROCESSES AND KNOW HOW OF MWH AS AUTHOR ALL PURSUANT TO THE TERMS OF A CONTRACTUAL SCOPE OF WORK GOVERNING ITS PREPARATION. THIS DRAWING MAY NOT BE USED OR MODIFIED OTHER THAN IN STRICT ACCORDANCE WITH THE TERMS OF THE GOVERNING CONTRACT AND SCOPE OF WORK OR OTHERWISE ABSENT THE INVOLVEMENT AND CONSENT OF THE AUTHOR. ANY ALTERATION OR ADAPTATION OF THIS DRAWING SHALL BE CONSISTENT WITH THE AUTHOR'S CONTRACTUAL AND PROPRIETARY RIGHTS AND BE AT USER'S SOLE RISK AND WITHOUT ANY LIABILITY OR LEGAL RESPONSIBILITY OF MWH.

DESIGNED BY	J DIXON	06–15
DRAWN BY	K REED	06–15
CHECKED BY	T KELLEY	06–15
APPROVED BY	C STRACHAN	06–15
PROJECT MANAGER	V DRAIN	06–15

NEWMONT

PROJECT LOCATION: WELLPINIT, WASHINGTON

PROJECT: MIDNITE MINE

TITLE: TYPICAL DETAILS AND SECTIONS (SHEET 3 OF 12)

MWH

SHEET: 10-84 | REVISION: 3

FILE NAME: 10-77 | DATE: JUNE 2015

pw:\\omwpwint03.mwhglobal.com:AM_PROJECTS03\Documents\FTC2_Newmont\Midnight Mine\RD-RA\03-Sheet Set\2015-01-01 BODR\10_WTP n PIPES\10-77.dwg

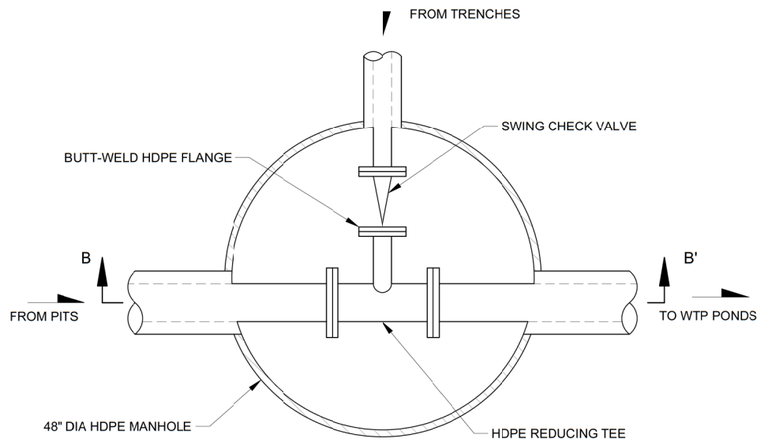

PLAN

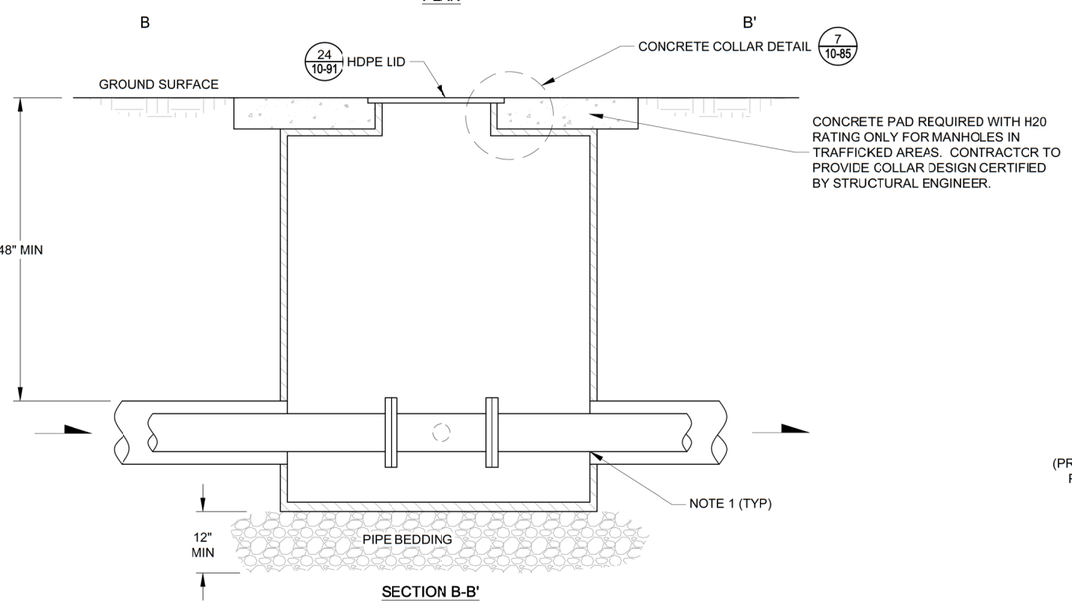

SECTION B-B'

NOTES:

1. ANNULAR SPACE OF DUAL PIPE TO ALLOW FLOW INTO THE VAULT.
2. CHECK VALVE WILL HAVE PRESSURE RATING EQUIVALENT TO OR GREATER THAN ADJACENT PIPE.

6 / 10-85 TRENCH TO INFLUENT MAIN DETAIL
NOT TO SCALE

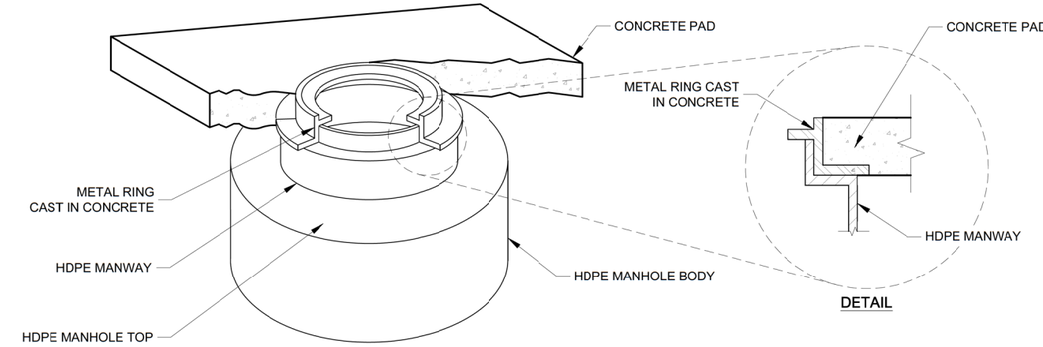

7 / 10-85 CONCRETE COLLAR DETAIL
NOT TO SCALE

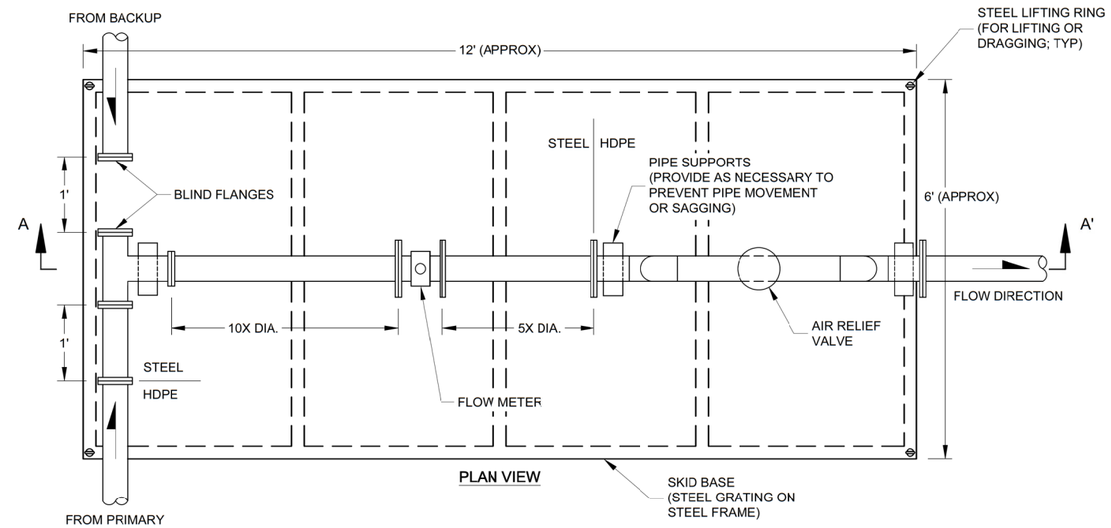

PLAN VIEW

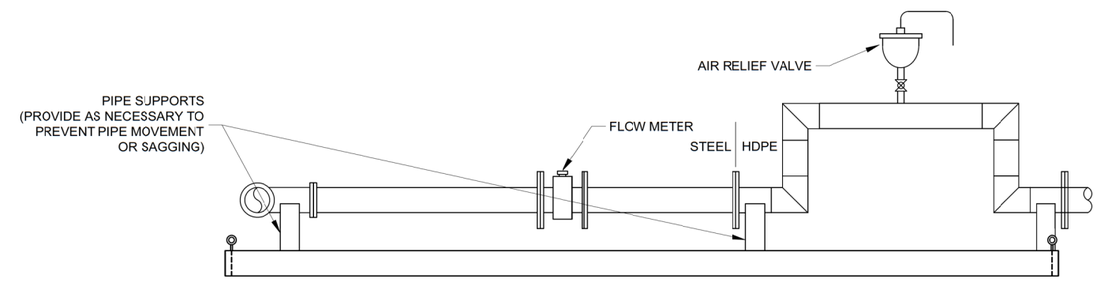

SECTION A-A'

NOTES:

1. FLOW METER AND FITTING WILL HAVE PRESSURE RATING EQUIVALENT TO OR GREATER THAN ADJACENT PIPE.
2. FOR PIPE SIZES SEE PLAN SHEETS.

8 / 10-85 TYPICAL TEMPORARY FLOW METER BOX DETAIL
NOT TO SCALE

REV	DESCRIPTION	TECH	ENG	DATE
3	ISSUED FOR 100% DESIGN	KR	JD	06–15
2	ISSUED FOR 90% DESIGN	MC	JD	07–14

DISCLAIMER:
THIS DRAWING WAS DEVELOPED THROUGH THE APPLICATION OF PROFESSIONAL ENGINEERING SKILL AND PROPRIETARY METHODOLOGIES, PROCESSES AND KNOW HOW OF MWH AS AUTHOR ALL PURSUANT TO THE TERMS OF A CONTRACTUAL SCOPE OF WORK GOVERNING ITS PREPARATION. THIS DRAWING MAY NOT BE USED OR MODIFIED OTHER THAN IN STRICT ACCORDANCE WITH THE TERMS OF THE GOVERNING CONTRACT AND SCOPE OF WORK OR OTHERWISE ABSENT THE INVOLVEMENT AND CONSENT OF THE AUTHOR. ANY ALTERATION OR ADAPTATION OF THIS DRAWING SHALL BE CONSISTENT WITH THE AUTHOR'S CONTRACTUAL AND PROPRIETARY RIGHTS AND BE AT USER'S SOLE RISK AND WITHOUT ANY LIABILITY OR LEGAL RESPONSIBILITY OF MWH.

GENERAL NOTES:

1. ALL PIPES SHALL BE FUSE WELDED HDPE, UNLESS OTHERWISE STATED.
2. ALL FLANGES SHALL BE HDPE UNLESS OTHERWISE STATED.

DESIGNED BY	J DIXON	06–15
DRAWN BY	K REED	06–15
CHECKED BY	T KELLEY	06–15
APPROVED BY	C STRACHAN	06–15
PROJECT MANAGER	V DRAIN	06–15

NEWMONT

PROJECT LOCATION: WELLPINIT, WASHINGTON
PROJECT: MIDNITE MINE
TITLE: TYPICAL DETAILS AND SECTIONS (SHEET 4 OF 12)

MWH

SHEET: 10-85
REVISION: 3
FILE NAME: 10-77
DATE: JUNE 2015

pw:\\amerspwint03.mwhglobal.com:AM_PROJECTS03\Documents\FTC2_Newmont\Midnight Mine\RD-RA\013-Sheet Set\2015-01-01 BODR\10_WTP n PIPES\10-77.dwg

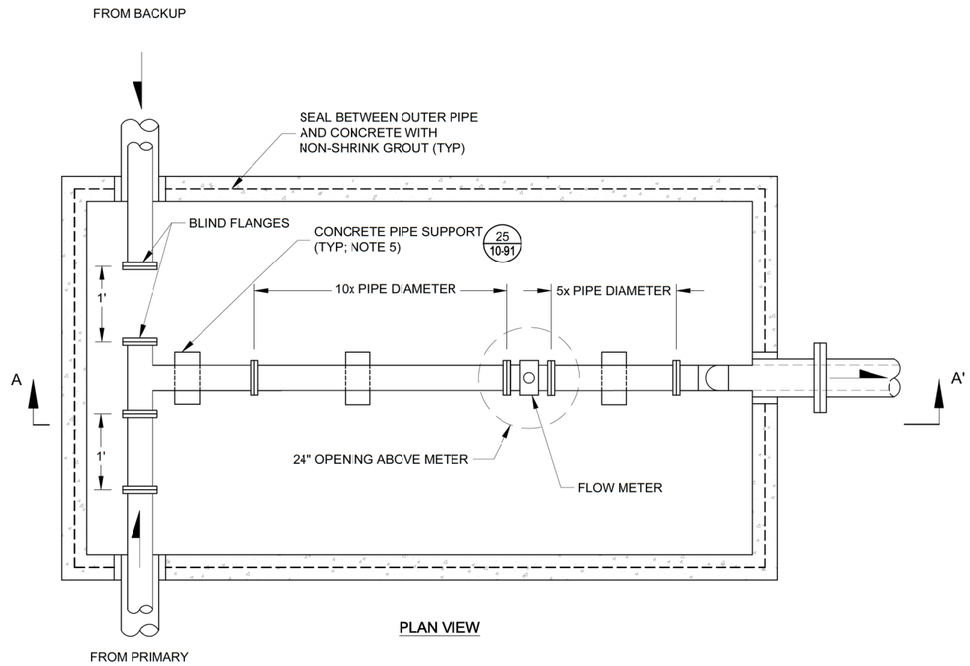

PLAN VIEW

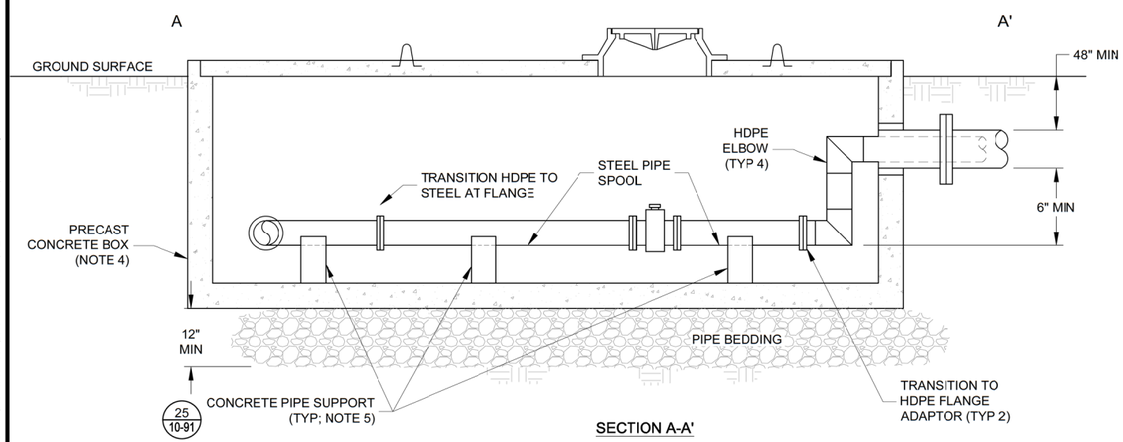

SECTION A-A'

NOTES:

1. ANNULAR SPACE OF DUAL CONTAINED PIPE TO ALLOW FLOW INTO VAULT.
2. FLOW METER AND FITTING WILL HAVE PRESSURE RATING EQUIVALENT TO OR GREATER THAN ADJACENT PIPE.
3. FOR PIPE SIZES SEE PLAN SHEETS.
4. CONTRACTOR SHALL PROVIDE PRECAST CONCRETE VAULT WITH H20 TRAFFIC RATING.
5. NUMBER OF PIPE SUPPORTS AS NECESSARY TO ELIMINATE PIPE SAG.

9 / 10-86 TYPICAL PERMANENT FLOW METER BOX DETAIL
NOT TO SCALE

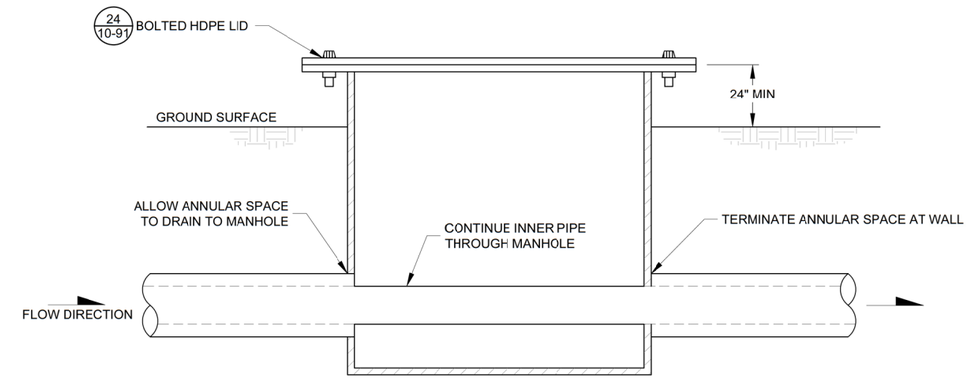

NOTE:

1. ANNULAR SPACE OF DUAL PIPE WILL BE ALLOWED TO FLOW INTO VAULT.

10 / 10-86 TYPICAL TEMPORARY INFLUENT MANHOLE SECTION
NOT TO SCALE

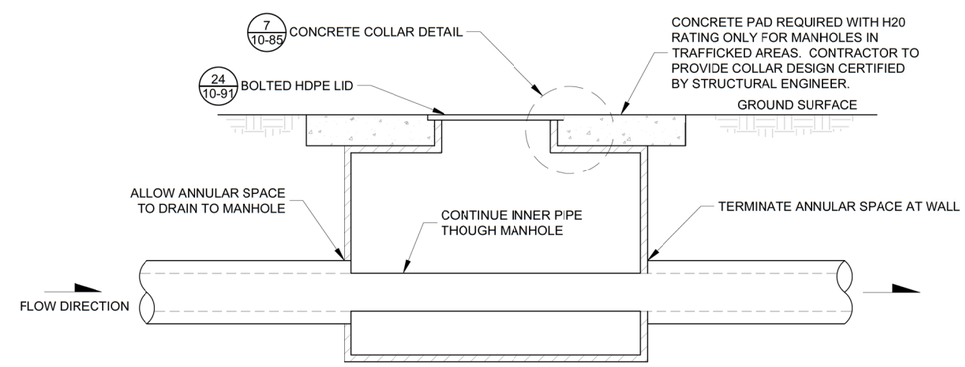

NOTES:

1. ANNULAR SPACE OF DUAL PIPE WILL BE ALLOWED TO FLOW INTO VAULT.
2. FLOW METER AND FITTING WILL HAVE PRESSURE RATING EQUIVALENT TO OR GREATER THAN ADJACENT PIPE.

11 / 10-86 TYPICAL PERMANENT INFLUENT MANHOLE SECTION
NOT TO SCALE

ISSUE REV	DESCRIPTION	TECH	ENG	DATE
3	ISSUED FOR 100% DESIGN	KR	JD	06–15
2	ISSUED FOR 90% DESIGN	MC	JD	07–14

DISCLAIMER:
THIS DRAWING WAS DEVELOPED THROUGH THE APPLICATION OF PROFESSIONAL ENGINEERING SKILL AND PROPRIETARY METHODOLOGIES, PROCESSES AND KNOW HOW OF MWH AS AUTHOR ALL PURSUANT TO THE TERMS OF A CONTRACTUAL SCOPE OF WORK GOVERNING ITS PREPARATION. THIS DRAWING MAY NOT BE USED OR MODIFIED OTHER THAN IN STRICT ACCORDANCE WITH THE TERMS OF THE GOVERNING CONTRACT AND SCOPE OF WORK OR OTHERWISE ABSENT THE INVOLVEMENT AND CONSENT OF THE AUTHOR. ANY ALTERATION OR ADAPTATION OF THIS DRAWING SHALL BE CONSISTENT WITH THE AUTHOR'S CONTRACTUAL AND PROPRIETARY RIGHTS AND BE AT USER'S SOLE RISK AND WITHOUT ANY LIABILITY OR LEGAL RESPONSIBILITY OF MWH.

GENERAL NOTES:

1. ALL PIPES SHALL BE FUSE WELDED HDPE, UNLESS OTHERWISE STATED.
2. ALL FLANGES SHALL BE HDPE UNLESS OTHERWISE STATED.

DESIGNED BY	J DIXON	06–15
DRAWN BY	K REED	06–15
CHECKED BY	T KELLEY	06–15
APPROVED BY	C STRACHAN	06–15
PROJECT MANAGER	V DRAIN	06–15

NEWMONT

PROJECT LOCATION: WELLPINIT, WASHINGTON
PROJECT: MIDNITE MINE
TITLE: TYPICAL DETAILS AND SECTIONS (SHEET 5 OF 12)

MWH

SHEET: 10-86
REVISION: 3
FILE NAME: 10-77
DATE: JUNE 2015

pw:\\amerpwint03.mwhglobal.com:AM_PROJECTS03\Documents\FTC2_Newmont\Midnight Mine\R0-RA\013-Sheet Set\2015-01-01 BOOR\10_WTP n PIPES\10-77.dwg

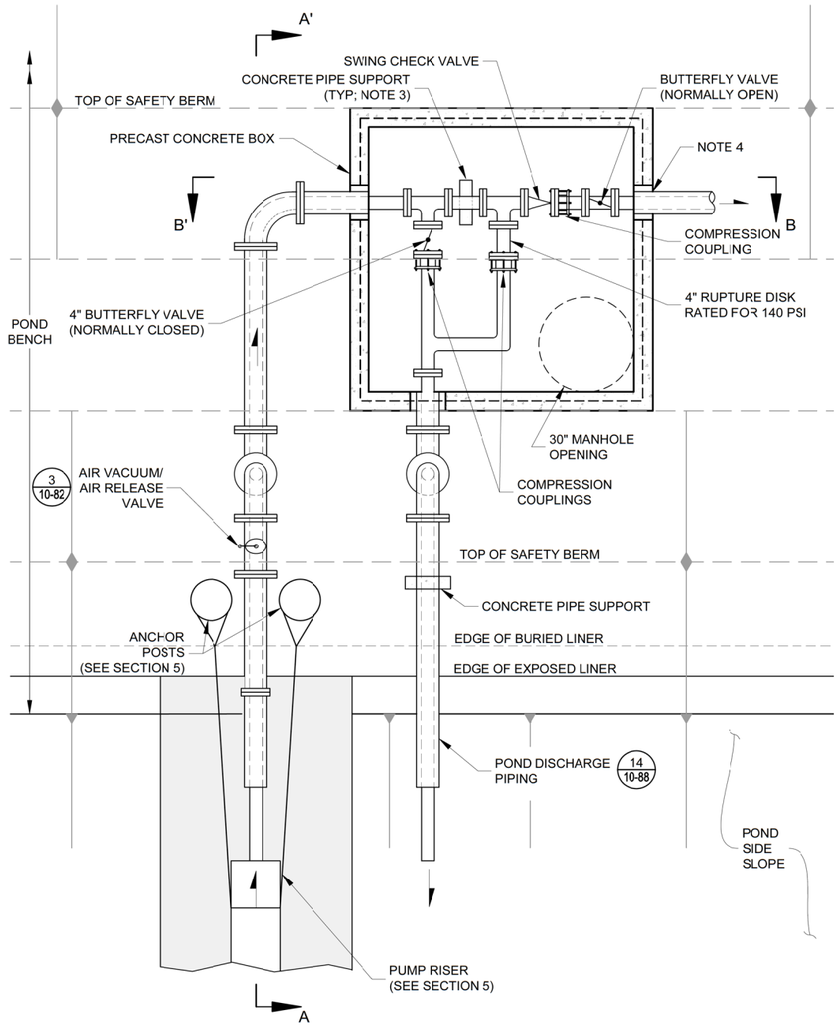

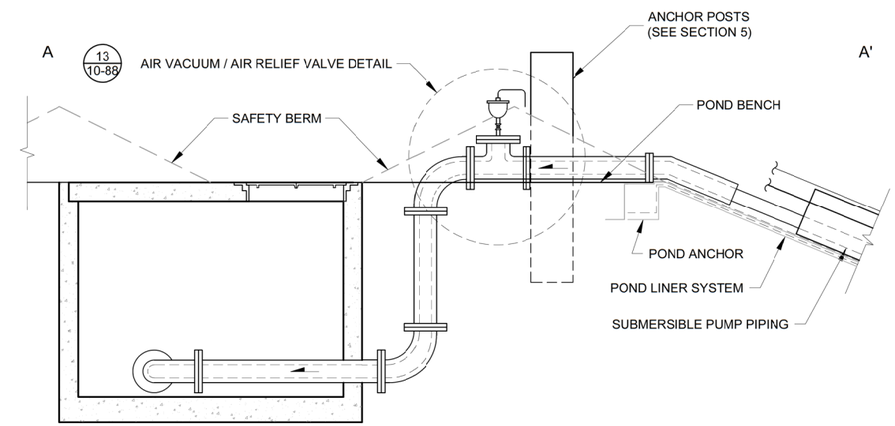

SECTION A-A'

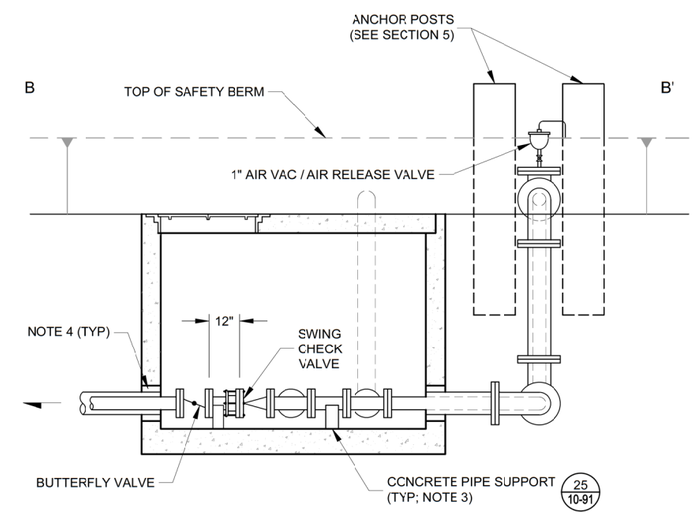

SECTION B-B'

NOTES:

1. OUTER PIPE TO ALLOW FLOW TO ENTER THE VALVE BOX.
2. DRAIN LINE TO DISCHARGE ONTO HDPE RUBSHEET.
3. NUMBER OF PIPE SUPPORTS AS NECESSARY TO ELIMINATE PIPE SAG, PER DETAIL 25.
4. SEAL BETWEEN OUTER PIPES AND CONCRETE WITH NON-SHRINK GROUT.
5. PRECAST CONCRETE BOX REQUIRED WITH H2O RATING.
6. RUPTURE DISK MATERIAL SHALL BE COMPATIBLE WITH WATER CHEMISTRY.

12
10-87
TYPICAL PUMP RISER CONNECTION DETAIL
NOT TO SCALE

ISSUE REV	DESCRIPTION	TECH	ENG	DATE
3	ISSUED FOR 100% DESIGN	KR	JD	06-15
2	ISSUED FOR 90% DESIGN	MC	JD	07-14

DISCLAIMER:
THIS DRAWING WAS DEVELOPED THROUGH THE APPLICATION OF PROFESSIONAL ENGINEERING SKILL AND PROPRIETARY METHODOLOGIES, PROCESSES AND KNOW HOW OF MWH AS AUTHOR ALL PURSUANT TO THE TERMS OF A CONTRACTUAL SCOPE OF WORK GOVERNING ITS PREPARATION. THIS DRAWING MAY NOT BE USED OR MODIFIED OTHER THAN IN STRICT ACCORDANCE WITH THE TERMS OF THE GOVERNING CONTRACT AND SCOPE OF WORK OR OTHERWISE ABSENT THE INVOLVEMENT AND CONSENT OF THE AUTHOR. ANY ALTERATION OR ADAPTATION OF THIS DRAWING SHALL BE CONSISTENT WITH THE AUTHOR'S CONTRACTUAL AND PROPRIETARY RIGHTS AND BE AT USER'S SOLE RISK AND WITHOUT ANY LIABILITY OR LEGAL RESPONSIBILITY OF MWH.

DESIGNED BY	J DIXON	06-15
DRAWN BY	K REED	06-15
CHECKED BY	T KELLEY	06-15
APPROVED BY	C STRACHAN	06-15
PROJECT MANAGER	V DRAIN	06-15

NEWMONT

PROJECT LOCATION: WELLPINIT, WASHINGTON
PROJECT: MIDNITE MINE
TITLE: TYPICAL DETAILS AND SECTIONS (SHEET 6 OF 12)

MWH

SHEET: 10-87
REVISION: 3
FILE NAME: 10-77
DATE: JUNE 2015

pw:\\cmwpwint03.mwhglobal.com:AM_PROJECTS03\Documents\FTC2_Newmont\Midnight Mine\RD-RA\013-Sheet Set\2015-01-01 BODR\10_WTP n PIPES\10-77.dwg

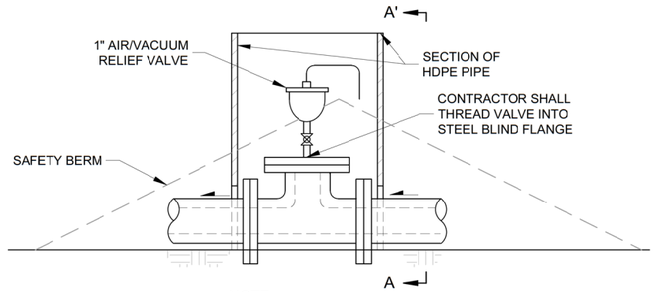

NOTE:

1. CONTRACTOR SHALL INSTALL VALVES WITHIN FOOTPRINT OF SAFETY BERMS WHENEVER POSSIBLE.

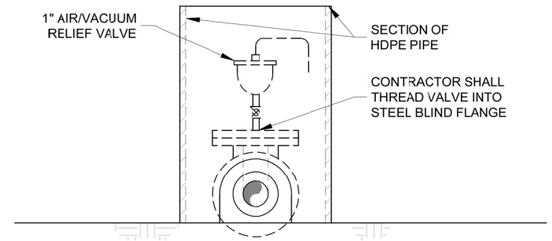

SECTION A-A'

13 / 10-88 POND BENCH AIR VACUUM/AIR RELEASE DETAIL

NOT TO SCALE

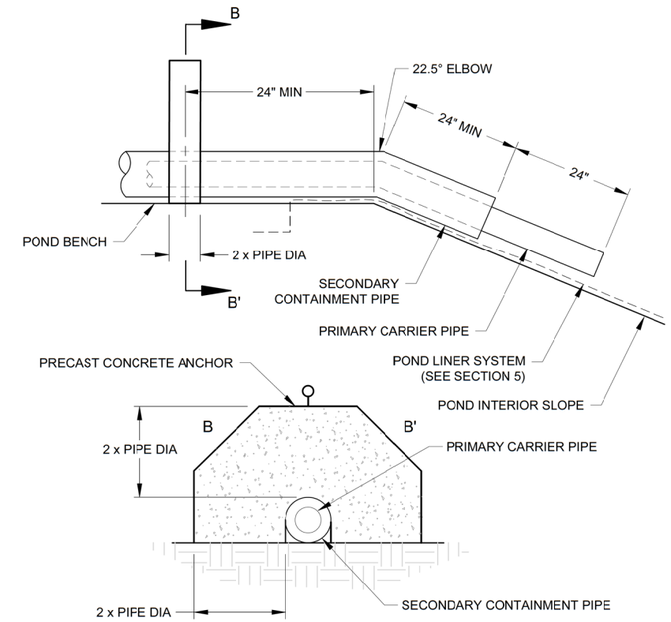

SECTION B-B'

NOTE:

1. PIPES SHALL DISCHARGE ONTO HDPE RUBSHEET IN POND.

14 / 10-88 TYPICAL POND DISCHARGE PIPING DETAIL

NOT TO SCALE

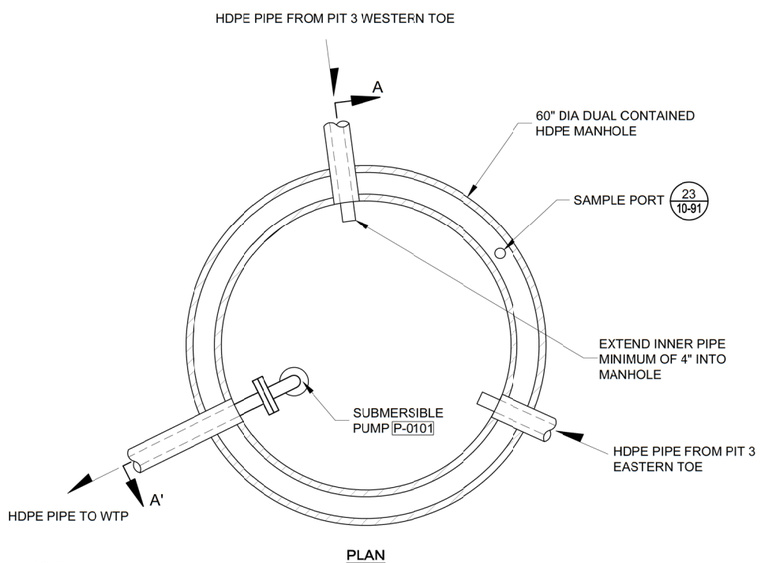

PLAN

NOTE:

1. ANNULUS OF THE DUAL PIPES TO ALLOW FLOW TO ENTER WET WELL.

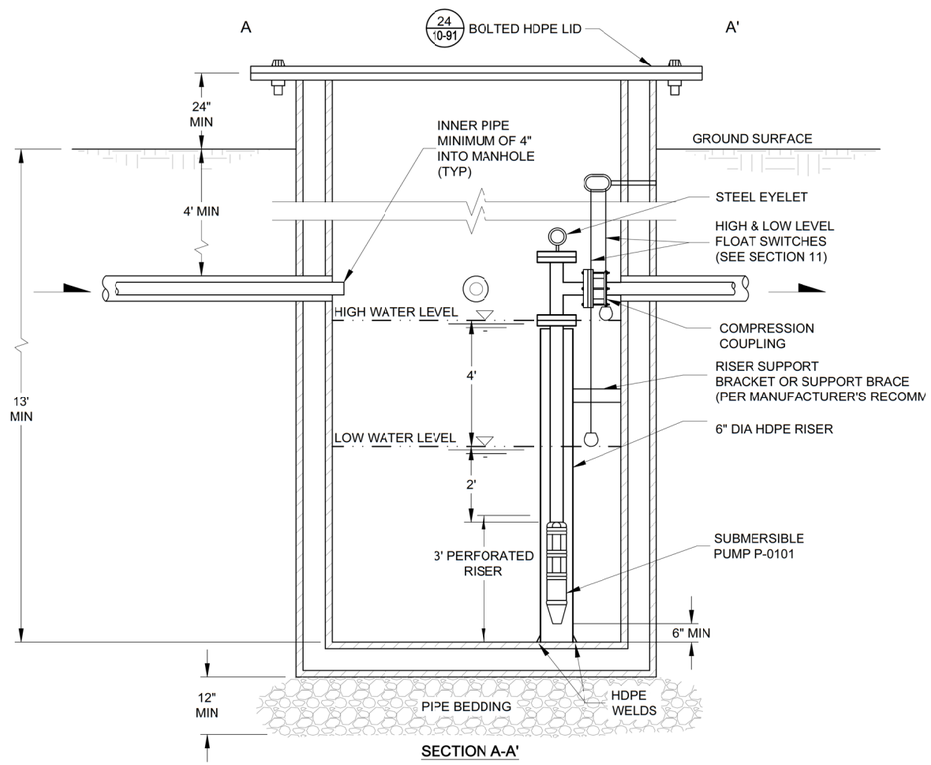

SECTION A-A'

15 / 10-88 SEEPAGE COLLECTION WET WELL DETAIL

NOT TO SCALE

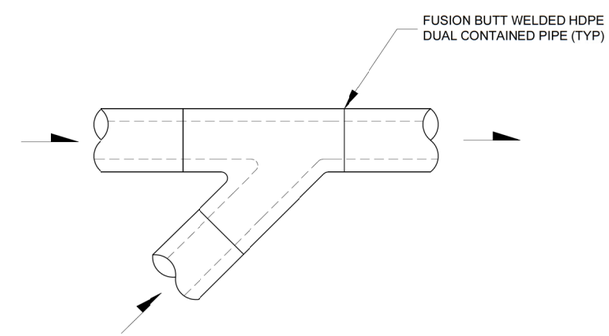

16 / 10-88 TYPICAL DUAL WALL WYE DETAIL

NOT TO SCALE

ISSUE REV	DESCRIPTION	TECH	ENG	DATE
3	ISSUED FOR 100% DESIGN	KR	JD	06–15
2	ISSUED FOR 90% DESIGN	MC	JD	07–14

DISCLAIMER:
THIS DRAWING WAS DEVELOPED THROUGH THE APPLICATION OF PROFESSIONAL ENGINEERING SKILL AND PROPRIETARY METHODOLOGIES, PROCESSES AND KNOW HOW OF MWH AS AUTHOR ALL PURSUANT TO THE TERMS OF A CONTRACTUAL SCOPE OF WORK GOVERNING ITS PREPARATION. THIS DRAWING MAY NOT BE USED OR MODIFIED OTHER THAN IN STRICT ACCORDANCE WITH THE TERMS OF THE GOVERNING CONTRACT AND SCOPE OF WORK OR OTHERWISE ABSENT THE INVOLVEMENT AND CONSENT OF THE AUTHOR. ANY ALTERATION OR ADAPTATION OF THIS DRAWING SHALL BE CONSISTENT WITH THE AUTHOR'S CONTRACTUAL AND PROPRIETARY RIGHTS AND BE AT USER'S SOLE RISK AND WITHOUT ANY LIABILITY OR LEGAL RESPONSIBILITY OF MWH.

DESIGNED BY	J DIXON	06–15
DRAWN BY	K REED	06–15
CHECKED BY	T KELLEY	06–15
APPROVED BY	C STRACHAN	06–15
PROJECT MANAGER	V DRAIN	06–15

NEWMONT

PROJECT LOCATION: WELLPINIT, WASHINGTON

PROJECT: MIDNITE MINE

TITLE: TYPICAL DETAILS AND SECTIONS (SHEET 7 OF 12)

MWH

SHEET: 10-88

REVISION: 3

FILE NAME: 10-77

DATE: JUNE 2015

pw:\\amerpwint03.mwhglobal.com:AM_PROJECTS03\Documents\FTC2_Newmont\Midnight Mine\RD-RA\013-Sheet Set\2015-01-01 BODR\10_WTP n PIPES\10-77.dwg

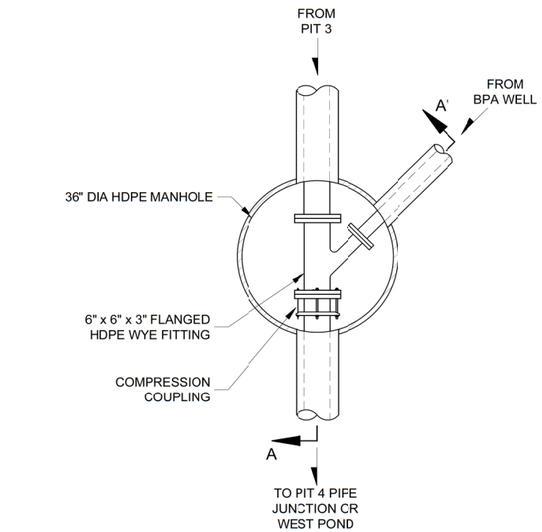

PLAN

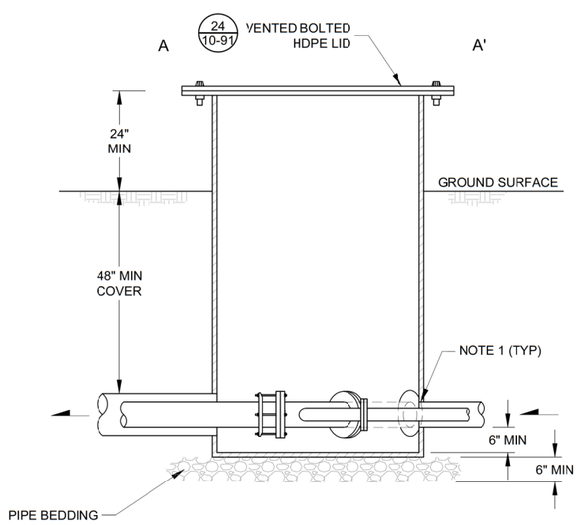

SECTION A-A'

NOTE:

1. ANNULUS OF THE DUAL PIPES TO ALLOW FLOW INTO THE MANHOLE.

17 / 10-89 PIT 3 JUNCTION MANHOLE

NOT TO SCALE

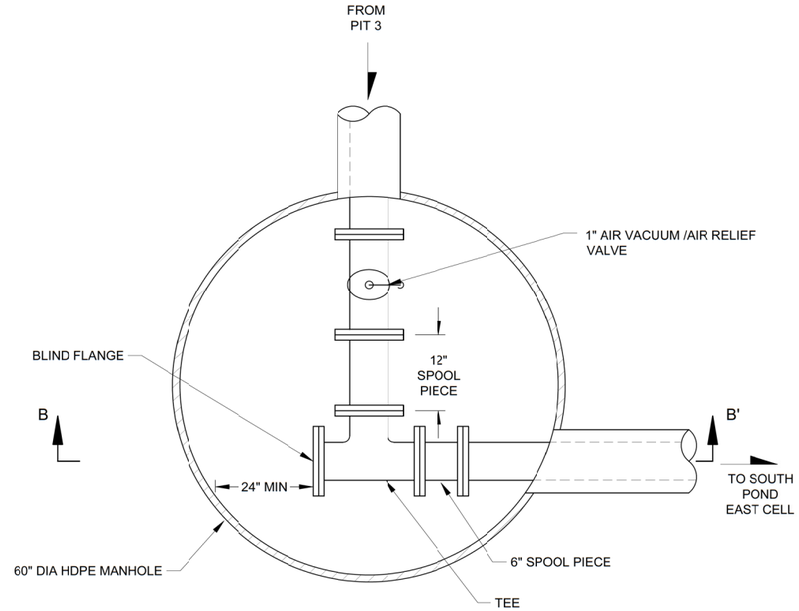

PLAN

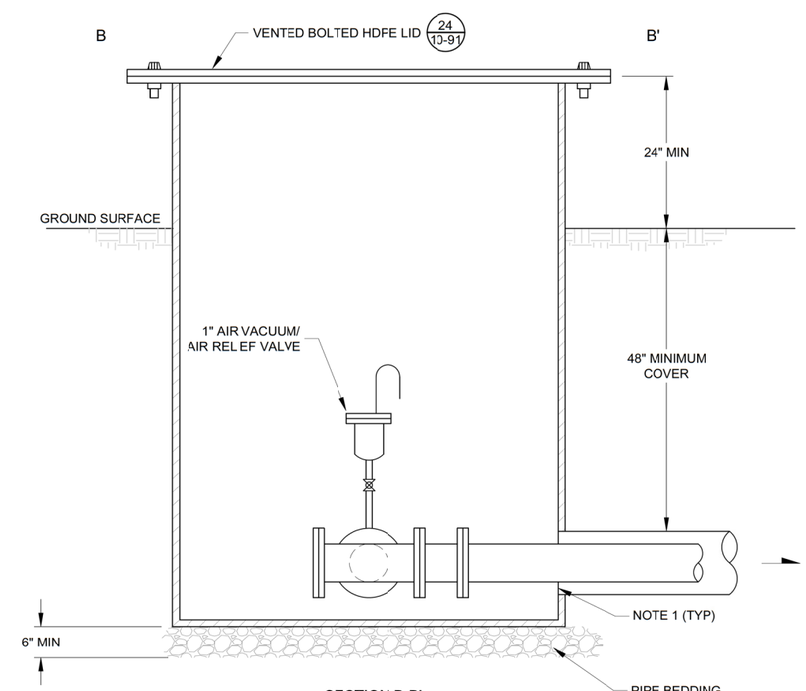

SECTION B-B'

NOTE:

1. ANNULUS OF THE DUAL PIPES TO ALLOW FLOW INTO THE MANHOLE.

18 / 10-89 PIT 3 TO SOUTH POND SPLITTER

NOT TO SCALE

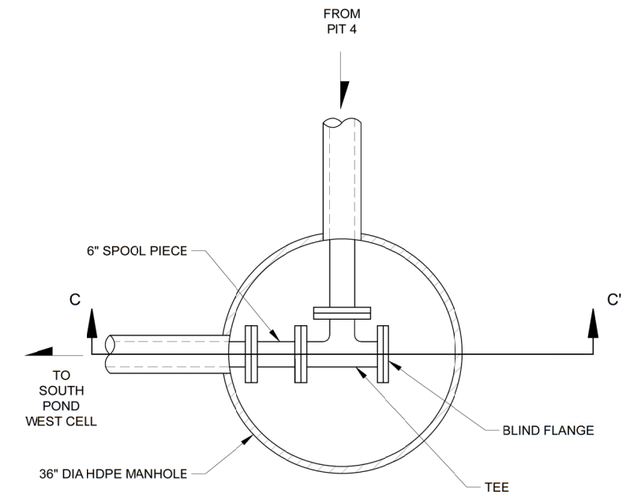

PLAN

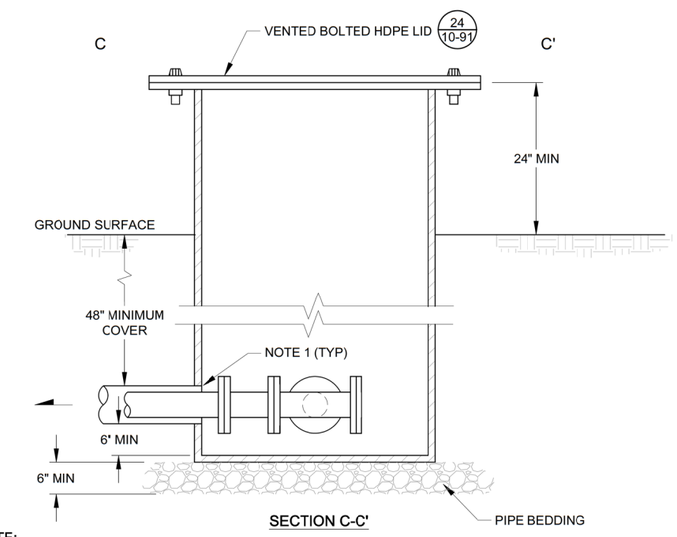

SECTION C-C'

NOTE:

1. ANNULUS OF THE DUAL PIPES TO ALLOW FLOW INTO THE MANHOLE.

19 / 10-89 PIT 4 TO SOUTH POND SPLITTER

NOT TO SCALE

REV	DESCRIPTION	TECH	ENG	DATE
3	ISSUED FOR 100% DESIGN	KR	JD	06–15
2	ISSUED FOR 90% DESIGN	MC	JD	07–14

ISSUE

DISCLAIMER:
THIS DRAWING WAS DEVELOPED THROUGH THE APPLICATION OF PROFESSIONAL ENGINEERING SKILL AND PROPRIETARY METHODOLOGIES, PROCESSES AND KNOWHOW OF MWH AS AUTHOR ALL PURSUANT TO THE TERMS OF A CONTRACTUAL SCOPE OF WORK GOVERNING ITS PREPARATION. THIS DRAWING MAY NOT BE USED OR MODIFIED OTHER THAN IN STRICT ACCORDANCE WITH THE TERMS OF THE GOVERNING CONTRACT AND SCOPE OF WORK OR OTHERWISE ABSENT THE INVOLVEMENT AND CONSENT OF THE AUTHOR. ANY ALTERATION OR ADAPTATION OF THIS DRAWING SHALL BE CONSISTENT WITH THE AUTHOR'S CONTRACTUAL AND PROPRIETARY RIGHTS AND BE AT USER'S SOLE RISK AND WITHOUT ANY LIABILITY OR LEGAL RESPONSIBILITY OF MWH.

DESIGNED BY	J DIXON	06–15
DRAWN BY	K REED	06–15
CHECKED BY	T KELLEY	06–15
APPROVED BY	C STRACHAN	06–15
PROJECT MANAGER	V DRAIN	06–15

NEWMONT

PROJECT LOCATION: WELLPINIT, WASHINGTON

PROJECT: MIDNITE MINE

TITLE: TYPICAL DETAILS AND SECTIONS (SHEET 8 OF 12)

MWH

SHEET: 10-89

REVISION: 3

FILE NAME: 10-77

DATE: JUNE 2015

pw:\\amerspwint03.mwhglobal.com:AM_PROJECTS03\Documents\FTC2_Newmont\Midnight Mine\RD-RA\013-Sheet Set\2015-01-01 BOOR\10_WTP n PIPES\10-77.dwg

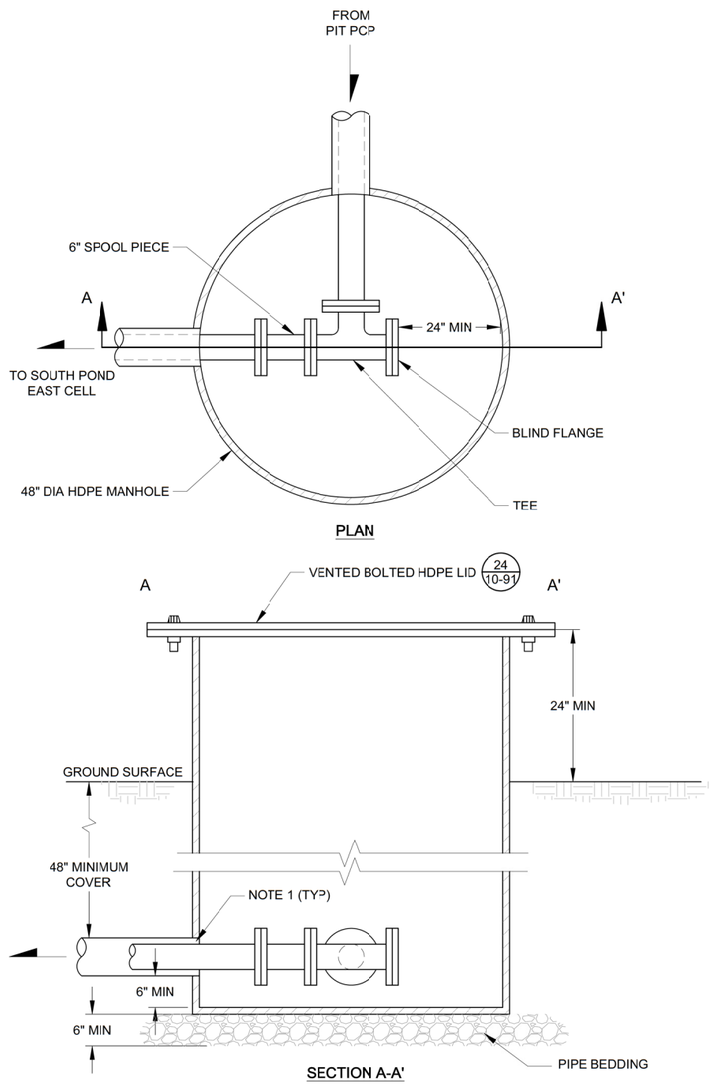

NOTE:

1. ANNULUS OF THE DUAL PIPES TO ALLOW FLOW INTO THE MANHOLE.

20 / 10-90 PCP TO SOUTH POND SPLITTER

NOT TO SCALE

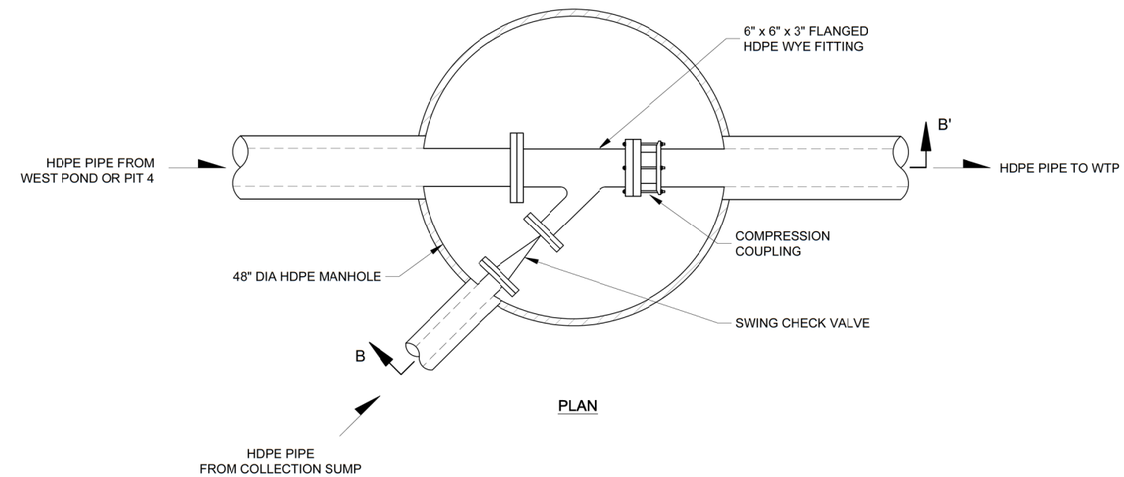

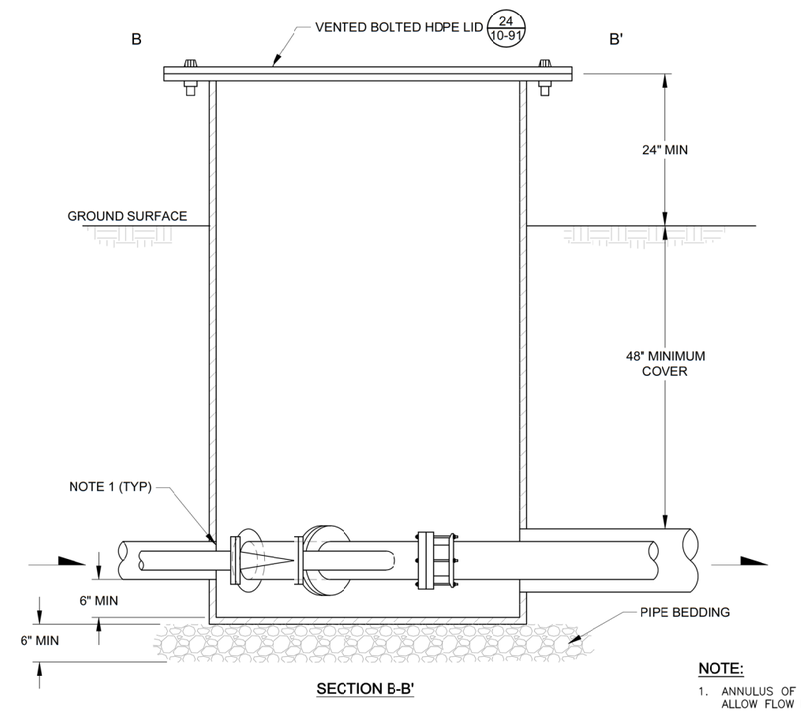

NOTE:

1. ANNULUS OF THE DUAL PIPES TO ALLOW FLOW INTO THE MANHOLE.

21 / 10-90 COLLECTION SUMP JUNCTION DETAIL

NOT TO SCALE

REV	DESCRIPTION	TECH	ENG	DATE
3	ISSUED FOR 100% DESIGN	KR	JD	06–15
2	ISSUED FOR 90% DESIGN	MC	JD	07–14

ISSUE

DISCLAIMER:
THIS DRAWING WAS DEVELOPED THROUGH THE APPLICATION OF PROFESSIONAL ENGINEERING SKILL AND PROPRIETARY METHODOLOGIES, PROCESSES AND KNOW HOW OF MWH AS AUTHOR ALL PURSUANT TO THE TERMS OF A CONTRACTUAL SCOPE OF WORK GOVERNING ITS PREPARATION. THIS DRAWING MAY NOT BE USED OR MODIFIED OTHER THAN IN STRICT ACCORDANCE WITH THE TERMS OF THE GOVERNING CONTRACT AND SCOPE OF WORK OR OTHERWISE ABSENT THE INVOLVEMENT AND CONSENT OF THE AUTHOR. ANY ALTERATION OR ADAPTATION OF THIS DRAWING SHALL BE CONSISTENT WITH THE AUTHOR'S CONTRACTUAL AND PROPRIETARY RIGHTS AND BE AT USER'S SOLE RISK AND WITHOUT ANY LIABILITY OR LEGAL RESPONSIBILITY OF MWH.

DESIGNED BY	J DIXON	06–15
DRAWN BY	K REED	06–15
CHECKED BY	T KELLEY	06–15
APPROVED BY	C STRACHAN	06–15
PROJECT MANAGER	V DRAIN	06–15

NEWMONT

PROJECT LOCATION: WELLPINIT, WASHINGTON

PROJECT: MIDNITE MINE

TITLE: TYPICAL DETAILS AND SECTIONS (SHEET 9 OF 12)

MWH

SHEET: 10-90

REVISION: 3

FILE NAME: 10-77

DATE: JUNE 2015

pw:\\amerwpwint03.mwhglobal.com:AM_PROJECTS03\Documents\FTC2_Newmont\Midnight Mine\R0-RA\013-Sheet Set\2015-01-01 BOR\10_WTP n PIPES\10-77.dwg

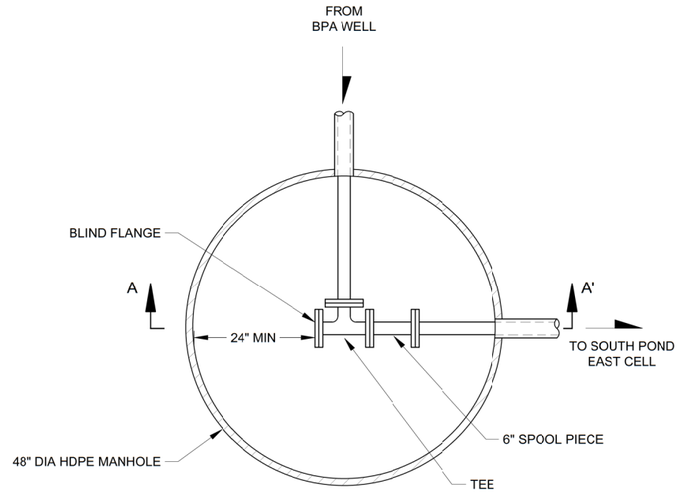

PLAN

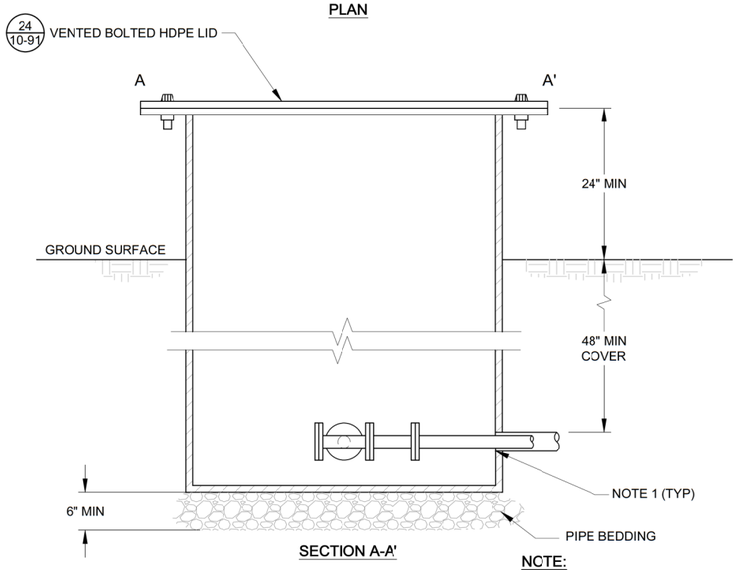

SECTION A-A'

NOTE:

1. ANNULUS OF THE DUAL PIPES TO ALLOW FLOW INTO THE MANHOLE.

22 / 10-91 BPA (GW-54) TO SOUTH POND SPLITTER

NOT TO SCALE

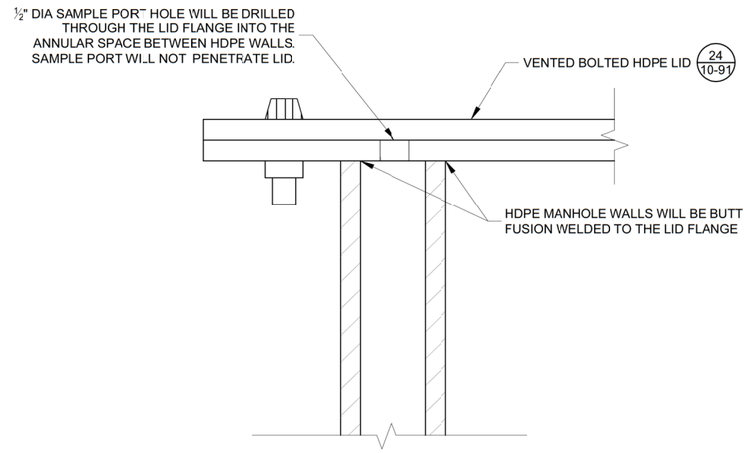

NOTE:

1. HDPE MANHOLE LIDS WILL NOT BE USED ON ANY H20 TRAFFIC RATED MANHOLES.

23 / 10-91 DUAL CONTAINED HDPE MANHOLE LID - SAMPLE PORT DETAIL

NOT TO SCALE

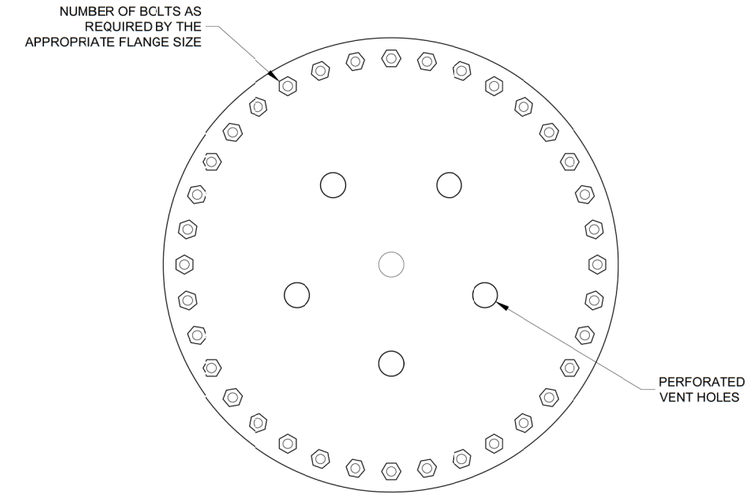

NOTES:

1. TOTAL AREA OF PERFORATED VENT HOLES WILL PROVIDE A MINIMUM CROSS-SECTIONAL AREA OF 3 SQ. IN.
2. A MINIMUM SIX VENT HOLES WILL BE INSTALLED INTO HDPE LIDS.
3. STEEL LIDS WILL BE USED ON ANY H20 TRAFFIC RATED MANHOLES.
4. VENT HOLES WILL BE KEPT WITHIN THE FLANGE SECTION OF THE MANHOLES.

24 / 10-91 HDPE MANHOLE LID VENT DETAIL

NOT TO SCALE

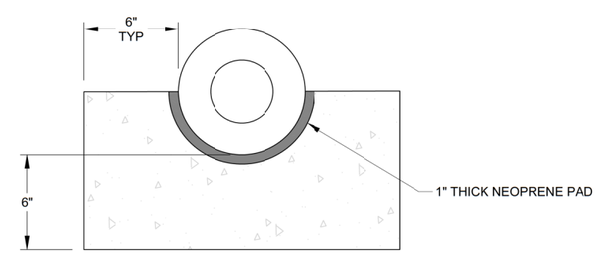

ELEVATION

NOTE:

1. ALL PIPE SUPPORTS WILL BE A MINIMUM OF 4-INCHES THICK.

25 / 10-91 CONCRETE PIPE SUPPORT

NOT TO SCALE

ISSUE REV	DESCRIPTION	TECH	ENG	DATE
3	ISSUED FOR 100% DESIGN	KR	JD	06-15
2	ISSUED FOR 90% DESIGN	MC	JD	07-14

DISCLAIMER:
THIS DRAWING WAS DEVELOPED THROUGH THE APPLICATION OF PROFESSIONAL ENGINEERING SKILL AND PROPRIETARY METHODOLOGIES, PROCESSES AND KNOW HOW OF MWH AS AUTHOR AS PURSUANT TO THE TERMS OF A CONTRACTUAL SCOPE OF WORK GOVERNING ITS PREPARATION. THIS DRAWING MAY NOT BE USED OR MODIFIED OTHER THAN IN STRICT ACCORDANCE WITH THE TERMS OF THE GOVERNING CONTRACT AND SCOPE OF WORK OR OTHERWISE ABSENT THE INVOLVEMENT AND CONSENT OF THE AUTHOR. ANY ALTERATION OR ADAPTATION OF THIS DRAWING SHALL BE CONSISTENT WITH THE AUTHOR'S CONTRACTUAL AND PROPRIETARY RIGHTS AND BE AT USER'S SOLE RISK AND WITHOUT ANY LIABILITY OR LEGAL RESPONSIBILITY OF MWH.

DESIGNED BY	J DIXON	06-15
DRAWN BY	K REED	06-15
CHECKED BY	T KELLEY	06-15
APPROVED BY	C STRACHAN	06-15
PROJECT MANAGER	V DRAIN	06-15

NEWMONT

PROJECT LOCATION: WELLPINIT, WASHINGTON

PROJECT: MIDNITE MINE

TITLE: TYPICAL DETAILS AND SECTIONS (SHEET 10 OF 12)

MWH

SHEET: 10-91

REVISION: 3

FILE NAME: 10-77

DATE: JUNE 2015

pw:\\omsrvpwint03.mwhglobal.com:AM_PROJECTS03\Documents\FTC2_Newmont\Midnight Mine\R0-RA\013-Sheet Set\2015-01-01 BOOR\10_WTP n PIPES\10-77.dwg

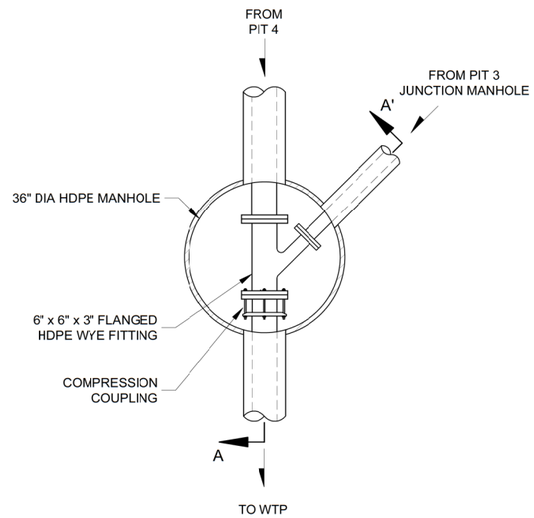

PLAN

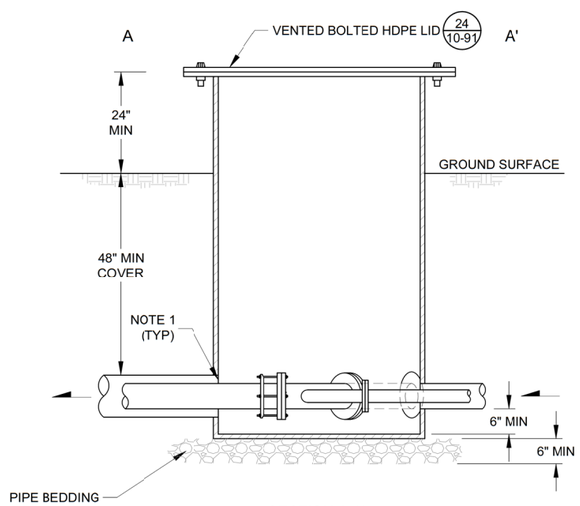

SECTION A-A'

NOTE:

1. ANNULUS OF DUAL PIPES TO BE ALLOWED TO FLOW INTO THE MANHOLE.

26 / 10-92 PIT 4 JUNCTION MANHOLE

NOT TO SCALE

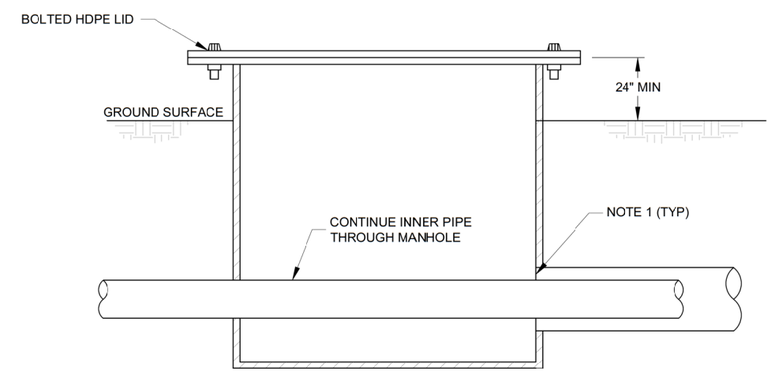

NOTE:

1. ANNULUS OF DUAL PIPES TO BE ALLOWED TO FLOW INTO VAULT.

27 / 10-92 DUAL TO SINGLE WALL PIPE TRANSITION TYPICAL SECTION

NOT TO SCALE

REV	DESCRIPTION	TECH	ENG	DATE
3	ISSUED FOR 100% DESIGN	KR	JD	06–15

ISSUE

DISCLAIMER:
THIS DRAWING WAS DEVELOPED THROUGH THE APPLICATION OF PROFESSIONAL ENGINEERING SKILL AND PROPRIETARY METHODOLOGIES, PROCESSES AND KNOW HOW OF MWH AS AUTHOR ALL PURSUANT TO THE TERMS OF A CONTRACTUAL SCOPE OF WORK GOVERNING ITS PREPARATION. THIS DRAWING MAY NOT BE USED OR MODIFIED OTHER THAN IN STRICT ACCORDANCE WITH THE TERMS OF THE GOVERNING CONTRACT AND SCOPE OF WORK OR OTHERWISE ABSENT THE INVOLVEMENT AND CONSENT OF THE AUTHOR. ANY ALTERATION OR ADAPTATION OF THIS DRAWING SHALL BE CONSISTENT WITH THE AUTHOR'S CONTRACTUAL AND PROPRIETARY RIGHTS AND BE AT USER'S SOLE RISK AND WITHOUT ANY LIABILITY OR LEGAL RESPONSIBILITY OF MWH.

DESIGNED BY	J DIXON	06–15
DRAWN BY	K REED	06–15
CHECKED BY	T KELLEY	06–15
APPROVED BY	C STRACHAN	06–15
PROJECT MANAGER	V DRAIN	06–15

NEWMONT

PROJECT LOCATION: WELLPINIT, WASHINGTON

PROJECT: MIDNITE MINE

TITLE: TYPICAL DETAILS AND SECTIONS (SHEET 11 OF 12)

MWH

SHEET: 10-92

REVISION: 3

FILE NAME: 10-77

DATE: JUNE 2015

pw:\\omwpwint03.mwglobal.com:AM_PROJECTS03\Documents\FTC2_Newmont\Midnight Mine\RD-RA\013-Sheet Set\2015-01-01 BODR\10_WTP n PIPES\10-77.dwg

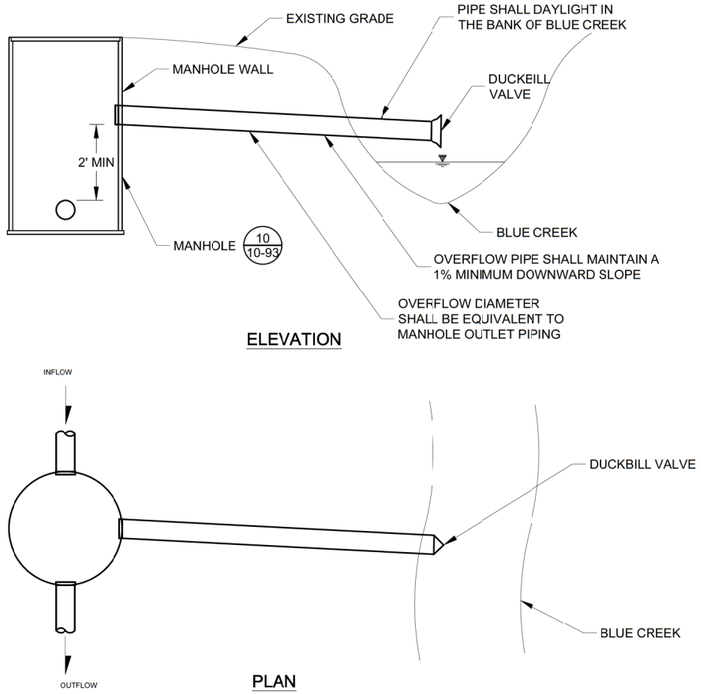

1 / 10-93 MANHOLE OVERFLOW DETAIL - (NOT UPDATED)
NOT TO SCALE

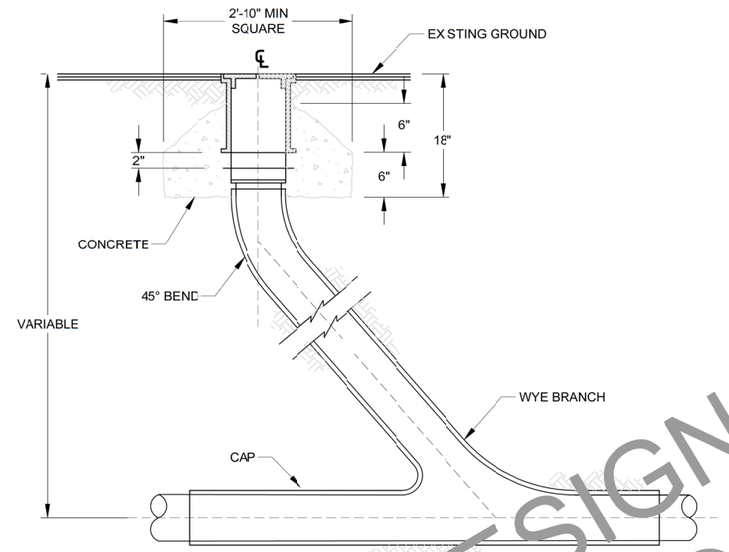

NOTE:

1. SEE PLAN FOR STATION AND INVERT ELEVATION. PIPE AND FITTINGS SHALL BE OF THE SAME MATERIAL AS THE MAIN LINE SEWER.

5 / 10-93 CLEANOUT TO GRADE (CO TG) - EFFLUENT PIPELINE - (NOT UPDATED)
NOT TO SCALE

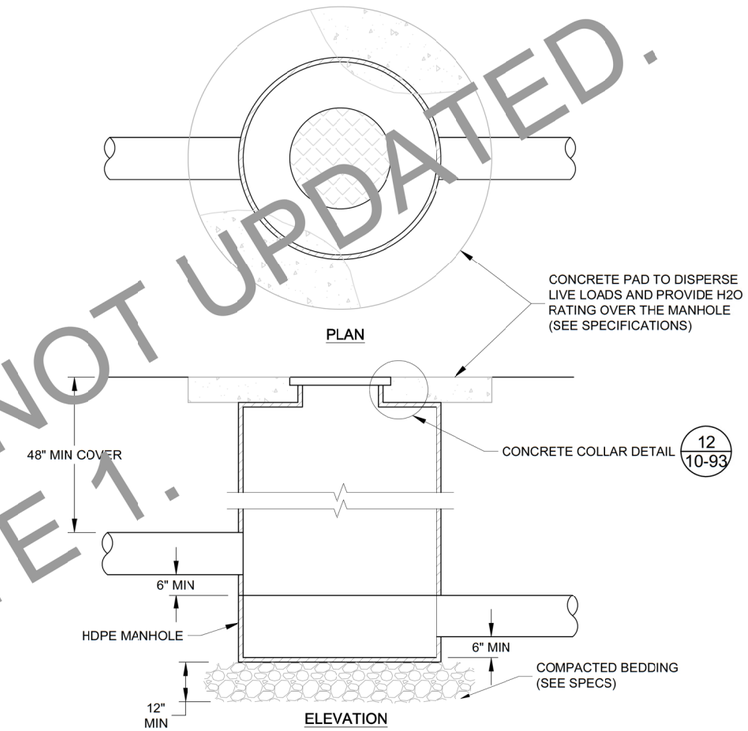

10 / 10-93 EFFLUENT PIPELINE MANHOLE DETAIL - (NOT UPDATED)
NOT TO SCALE

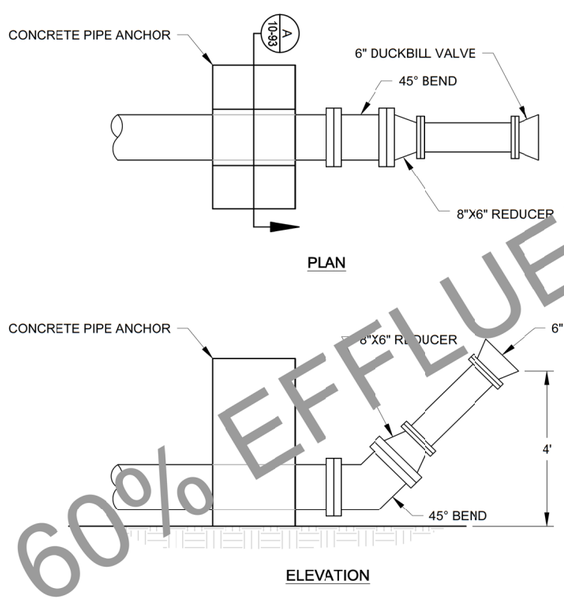

11 / 10-93 EFFLUENT PIPELINE OUTFALL DIFFUSER DETAIL - (NOT UPDATED)
NOT TO SCALE

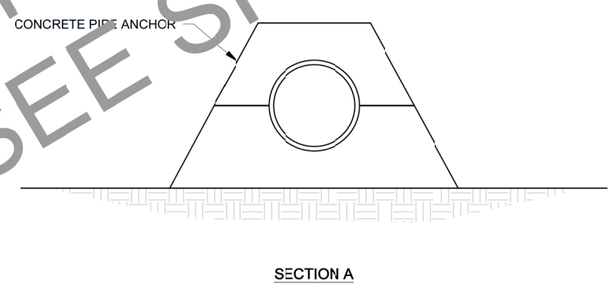

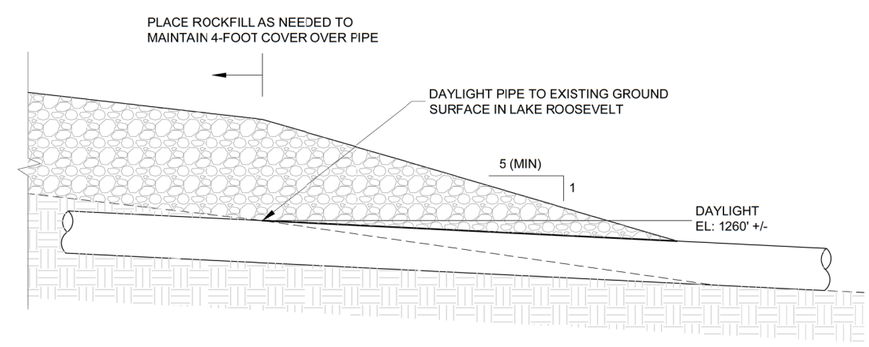

12 / 10-93 DAYLIGHT INTO LAKE ROOSEVELT DETAIL - (NOT UPDATED)
NOT TO SCALE

60% EFFLUENT PIPELINE DESIGN NOT UPDATED.
SEE SHEET 10-11 NOTE 1.

REV	DESCRIPTION	TECH	ENG	DATE
1	ISSUED FOR 60% DESIGN	DM	JD	12–13
0	ISSUED FOR 30% DESIGN	DM	JD	12–12

DISCLAIMER:
THIS DRAWING WAS DEVELOPED THROUGH THE APPLICATION OF PROFESSIONAL ENGINEERING SKILL AND PROPRIETARY METHODOLOGIES, PROCESSES AND KNOW HOW OF MWH AS AUTHOR ALL PURSUANT TO THE TERMS OF A CONTRACTUAL SCOPE OF WORK GOVERNING ITS PREPARATION. THIS DRAWING MAY NOT BE USED OR MODIFIED OTHER THAN IN STRICT ACCORDANCE WITH THE TERMS OF THE GOVERNING CONTRACT AND SCOPE OF WORK OR OTHERWISE ABSENT THE INVOLVEMENT AND CONSENT OF THE AUTHOR. ANY ALTERATION OR ADAPTATION OF THIS DRAWING SHALL BE CONSISTENT WITH THE AUTHOR'S CONTRACTUAL AND PROPRIETARY RIGHTS AND BE AT USER'S SOLE RISK AND WITHOUT ANY LIABILITY OR LEGAL RESPONSIBILITY OF MWH.

GENERAL NOTES:

1. ALL PIPES SHALL BE FUSE WELDED HDPE, UNLESS OTHERWISE STATED.
2. ALL FLANGES SHALL BE HDPE UNLESS OTHERWISE STATED.

DESIGNED BY	J DIXON	12–13
DRAWN BY	D MIRANDA	12–13
CHECKED BY	T KELLEY	12–13
APPROVED BY	C STRACHAN	12–13
PROJECT MANAGER	V DRAIN	12–13

NEWMONT

PROJECT LOCATION: WELLPINIT, WASHINGTON
PROJECT: MIDNITE MINE
TITLE: TYPICAL DETAILS AND SECTIONS (SHEET 12 OF 12)

MWH

SHEET: 10-93
REVISION: 1
FILE NAME: 10-77
DATE: DEC 2013

pw: \\amerwpiwint03.mwhglobal.com:AM_PROJECTS03\Documents\FTC2_Newmont\Midnight Mine\R0-RA\013-Sheet Set\2015-01-01 BOR\10_WTP n PIPES\10-77.dwg