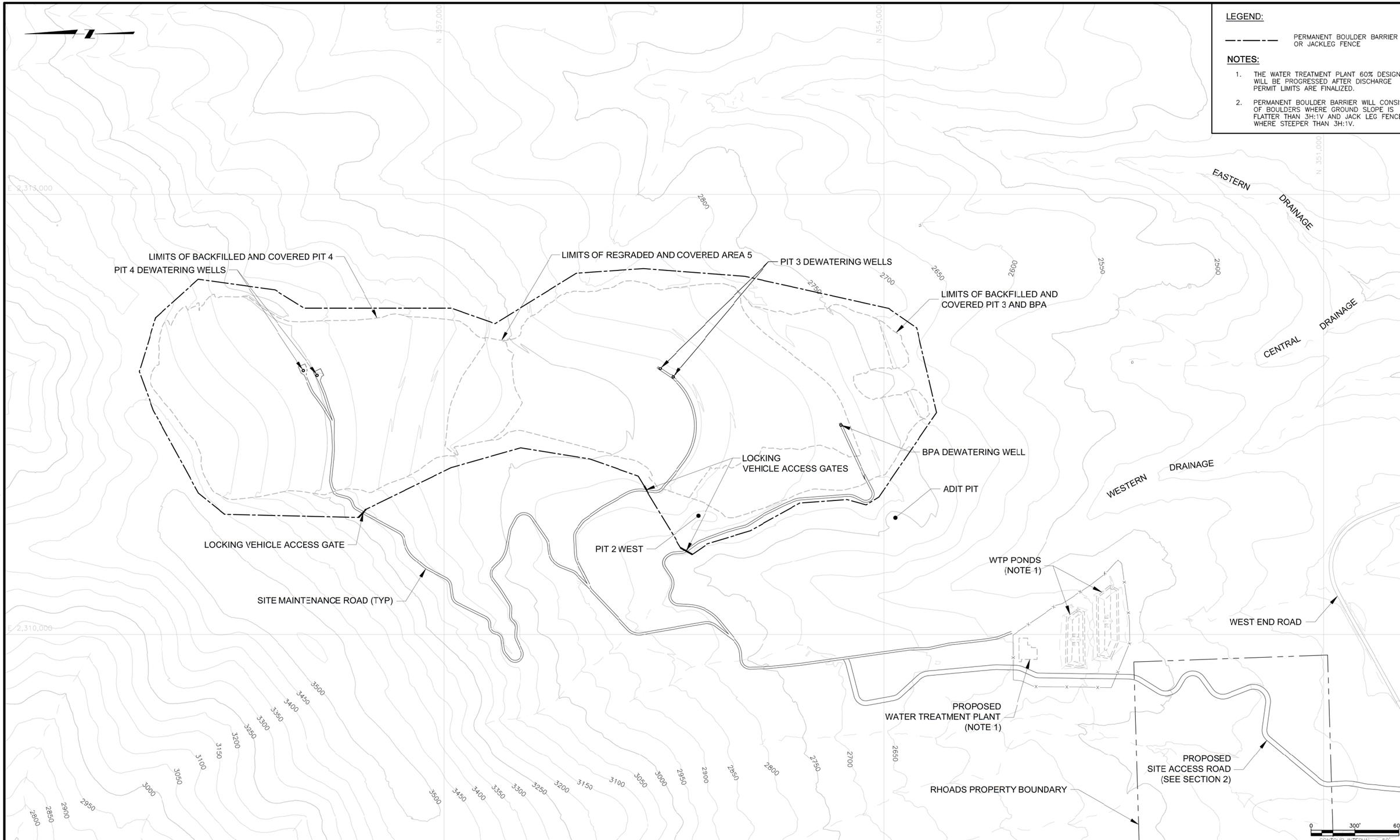

ISSUE REV	DESCRIPTION	TECH	ENG	DATE
0	ISSUED FOR 100% DESIGN	KR	SM	06–15

DISCLAIMER:
THIS DRAWING WAS DEVELOPED THROUGH THE APPLICATION OF PROFESSIONAL ENGINEERING SKILL AND PROPRIETARY METHODOLOGIES, PROCESSES AND KNOW HOW OF MWH AS AUTHOR ALL PURSUANT TO THE TERMS OF A CONTRACTUAL SCOPE OF WORK GOVERNING ITS PREPARATION. THIS DRAWING MAY NOT BE USED OR MODIFIED OTHER THAN IN STRICT ACCORDANCE WITH THE TERMS OF THE GOVERNING CONTRACT AND SCOPE OF WORK OR OTHERWISE ABSENT THE INVOLVEMENT AND CONSENT OF THE AUTHOR. ANY ALTERATION OR ADAPTATION OF THIS DRAWING SHALL BE CONSISTENT WITH THE AUTHOR'S CONTRACTUAL AND PROPRIETARY RIGHTS AND BE AT USER'S SOLE RISK AND WITHOUT ANY LIABILITY OR LEGAL RESPONSIBILITY OF MWH.

DRAWING REFERENCE(S):
- EXISTING TOPOGRAPHY BASED UPON LIDAR MAPPING BY SPATIAL INTEL 2010. WASHINGTON STATE PLANE–NORTH, NAD83/NAVD88.
- PREMINE TOPOGRAPHY AND PIT EXCAVATION TOPOGRAPHY BASED UPON INFORMATION PREPARED BY USBM, JULY 1995 AND PROVIDED BY DAWN MINING COMPANY, LLC. ORIGINAL COORDINATE SYSTEM USED IN USBM MAPPING (NAD27/NGVD29) HAS BEEN CONVERTED TO WASHINGTON STATE PLANE–NORTH, NAD83/NAVD88 COORDINATES.
- EXISTING CONTOURS REPRESENT APPROXIMATE GROUND SURFACE AT THE END OF REMEDIATION.

DESIGNED BY	S MCMANUS	06–15
DRAWN BY	K REED	06–15
CHECKED BY	T KELLEY	06–15
APPROVED BY	C STRACHAN	06–15
PROJECT MANAGER	V DRAIN	06–15

NEWMONT

PROJECT LOCATION: WELLPINIT, WASHINGTON
PROJECT: MIDNITE MINE
TITLE: FINAL REMEDIATION - PERMANENT ACCESS BARRIER PLAN

MWH

SHEET: 4-77
REVISION: 3
FILE NAME: 4-74
DATE: JUNE 2015

PW:\\AMERVPWNTO3.WWHGLOBAL.COM:AM_PROJECTS03\DOCUMENTS\FTC2_NEWMONT\MIDNIGHT MINE\RD-RA\013-SHEET SET\2015-01-01 BOOR\04_MINE EXCAV\4-74.dwg

ISSUE REV	DESCRIPTION	TECH	ENG	DATE
3	ISSUED FOR 100% DESIGN	KR	SM	06–15
2	ISSUED FOR 90% DESIGN	KR	SM	07–14
1	ISSUED FOR 60% DESIGN	DM	SM	12–13

DISCLAIMER:
THIS DRAWING WAS DEVELOPED THROUGH THE APPLICATION OF PROFESSIONAL ENGINEERING SKILL AND PROPRIETARY METHODOLOGIES, PROCESSES AND KNOW HOW OF MWH AS AUTHOR ALL PURSUANT TO THE TERMS OF A CONTRACTUAL SCOPE OF WORK GOVERNING ITS PREPARATION. THIS DRAWING MAY NOT BE USED OR MODIFIED OTHER THAN IN STRICT ACCORDANCE WITH THE TERMS OF THE GOVERNING CONTRACT AND SCOPE OF WORK OR OTHERWISE ABSENT THE INVOLVEMENT AND CONSENT OF THE AUTHOR. ANY ALTERATION OR ADAPTATION OF THIS DRAWING SHALL BE CONSISTENT WITH THE AUTHOR'S CONTRACTUAL AND PROPRIETARY RIGHTS AND BE AT USER'S SOLE RISK AND WITHOUT ANY LIABILITY OR LEGAL RESPONSIBILITY OF MWH.

DRAWING REFERENCE(S):
- EXISTING TOPOGRAPHY BASED UPON LIDAR MAPPING BY SPATIAL INTEL, 2010. WASHINGTON STATE PLANE–NORTH, NAD83/NAVD88.
- PREMINE TOPOGRAPHY AND PIT EXCAVATION TOPOGRAPHY BASED UPON INFORMATION PREPARED BY USBM, JULY 1995 AND PROVIDED BY DAWN MINING COMPANY, LLC ORIGINAL COORDINATE SYSTEM USED IN USBM MAPPING (NAD27/NGVD29) HAS BEEN CONVERTED TO WASHINGTON STATE PLANE–NORTH, NAD83/NAVD88 COORDINATES.

DESIGNED BY	S MCMANUS	06–15
DRAWN BY	C ESPOSITO	06–15
CHECKED BY	T KELLEY	06–15
APPROVED BY	C STRACHAN	06–15
PROJECT MANAGER	V DRAIN	06–15

NEWMONT

PROJECT LOCATION: WELLPINIT, WASHINGTON
PROJECT: MIDNITE MINE
TITLE: REVEGETATION AREAS

MWH

SHEET 4-78 | REVISION 3
FILE NAME 4-75 | DATE JUNE 2015

PW: \\AMER\PWNT03.MWHGLOBAL.COM: AM_PROJECTS03\DOCUMENTS\FTC2_NEWMONT\MIDNIGHT MINE\R0-RA\013-SHEET SET\2015-01-01 BOOR\04_MINE EXCAV\1-75.dwg

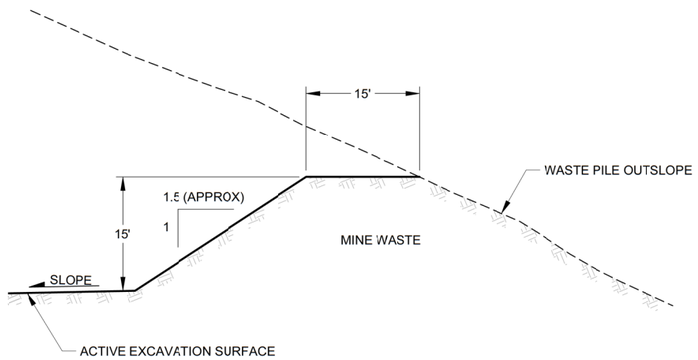

1 / 4-79 WASTE ROCK BERM TYPICAL SECTION
NOT TO SCALE

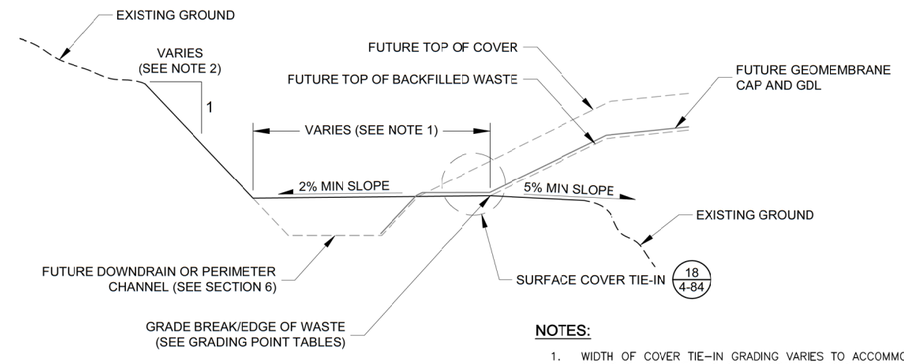

NOTES:

1. WIDTH OF COVER TIE-IN GRADING VARIES TO ACCOMMODATE COVER PLACEMENT AND DOWN-DRAIN CONSTRUCTION.
2. CUT SLOPE WILL VARY BASED ON PROPERTIES OF CUT SLOPE MATERIALS. SLOPES WILL BE 1:1 IN ROCK AND 2:1 IN SOIL AS DETERMINED BY THE ENGINEER.
3. REFER TO DETAIL 20 ON SHEET 4-84 FOR COVER TIE-IN IN AREAS WHERE DOWNDRAIN IS NOT IMMEDIATELY ADJACENT TO WASTE/COVER.

2 / 4-79 COVER TIE-IN GRADING TYPICAL SECTION
NOT TO SCALE

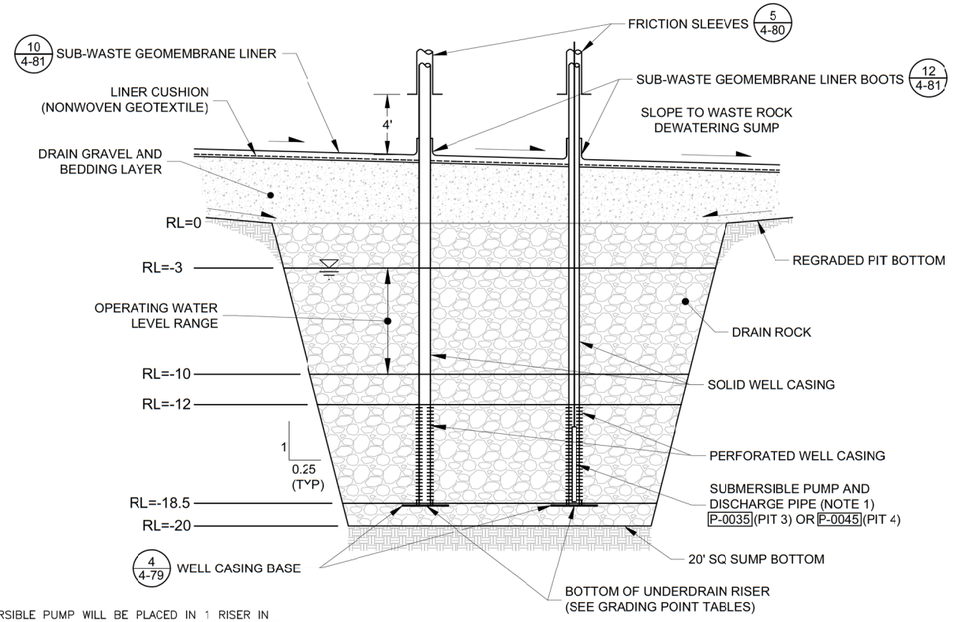

NOTES:

1. A SUBMERSIBLE PUMP WILL BE PLACED IN 1 RISER IN EACH UNDERDRAIN SUMP (PIT 3 AND PIT 4). THE OTHER RISER IN EACH UNDERDRAIN SUMP WILL REMAIN VACANT.
2. SEE SHEETS 4-12 AND 4-37 FOR UNDERDRAIN SUMP GRADING CONTROL POINTS.

3 / 4-79 UNDERDRAIN SUMP DETAIL
NOT TO SCALE

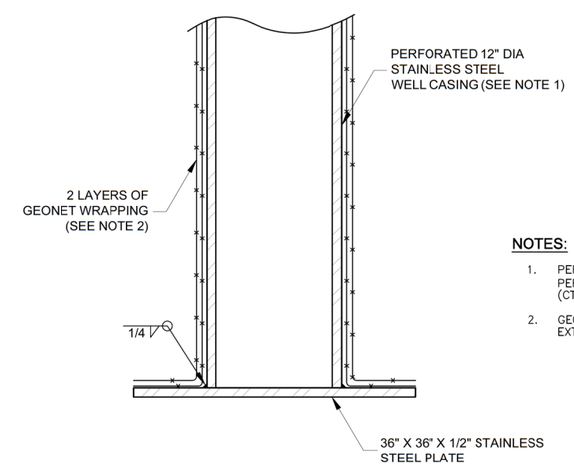

NOTES:

1. PERFORATED SECTION OF VERTICAL RISER SHALL BE PERFORATED WITH ½ IN DIA. HOLES SPACED 6 IN APART (CTC) VERTICALLY AND 90° APART (CTC) HORIZONTALLY.
2. GEONET WRAPPING SHALL BE NON-FABRIC FACED AND EXTEND TO THE TOP OF DRAIN GRAVEL.

4 / 4-79 WELL CASING BASE DETAIL
NOT TO SCALE

ISSUE REV	DESCRIPTION	TECH	ENG	DATE
3	ISSUED FOR 100% DESIGN	KR	SM	06-15
2	ISSUED FOR 90% DESIGN	KR	SM	07-14
1	ISSUED FOR 60% DESIGN	KT	SM	12-13
0	ISSUED FOR 30% DESIGN	DM	SM	12-12

DISCLAIMER:
THIS DRAWING WAS DEVELOPED THROUGH THE APPLICATION OF PROFESSIONAL ENGINEERING SKILL AND PROPRIETARY METHODOLOGIES, PROCESSES AND KNOW HOW OF MWH AS AUTHOR ALL PURSUANT TO THE TERMS OF A CONTRACTUAL SCOPE OF WORK GOVERNING ITS PREPARATION. THIS DRAWING MAY NOT BE USED OR MODIFIED OTHER THAN IN STRICT ACCORDANCE WITH THE TERMS OF THE GOVERNING CONTRACT AND SCOPE OF WORK OR OTHERWISE ABSENT THE INVOLVEMENT AND CONSENT OF THE AUTHOR. ANY ALTERATION OR ADAPTATION OF THIS DRAWING SHALL BE CONSISTENT WITH THE AUTHOR'S CONTRACTUAL AND PROPRIETARY RIGHTS AND BE AT USER'S SOLE RISK AND WITHOUT ANY LIABILITY OR LEGAL RESPONSIBILITY OF MWH.

DESIGNED BY	S MCMANUS	06-15
DRAWN BY	K REED	06-15
CHECKED BY	T KELLEY	06-15
APPROVED BY	C STRACHAN	06-15
PROJECT MANAGER	V DRAIN	06-15

NEWMONT

PROJECT LOCATION: WELLPINIT, WASHINGTON
PROJECT: MIDNITE MINE
TITLE: DETAILS AND TYPICAL SECTIONS (1 OF 20)

MWH

SHEET: 4-79
REVISION: 3
FILE NAME: 4-76
DATE: JUNE 2015

PW: \\AMERVPWINT03.WWRGLOBAL.COM:AM_PROJECTS03\DOCUMENTS\FTC2_NEWMONT\MIDNIGHT MINE\RD-RA\013-SHEET SET\2015-01-01 BOOR\04_MINE EXCAV\4-76.dwg

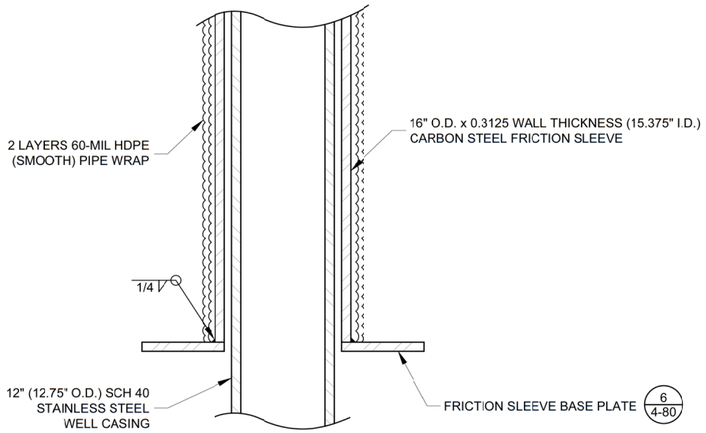

5 4-80 FRICTION SLEEVE DETAIL
NOT TO SCALE

NOTE:

1. BACKFILL ANNULUS BETWEEN STAINLESS STEEL WELL CASING AND CARBON STEEL FRICTION SLEEVE WITH HYDRATED BENTONITE.

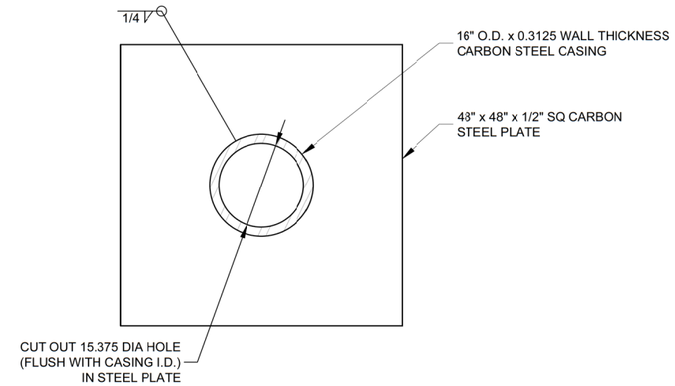

6 4-80 FRICTION SLEEVE BASE PLATE DETAIL
NOT TO SCALE

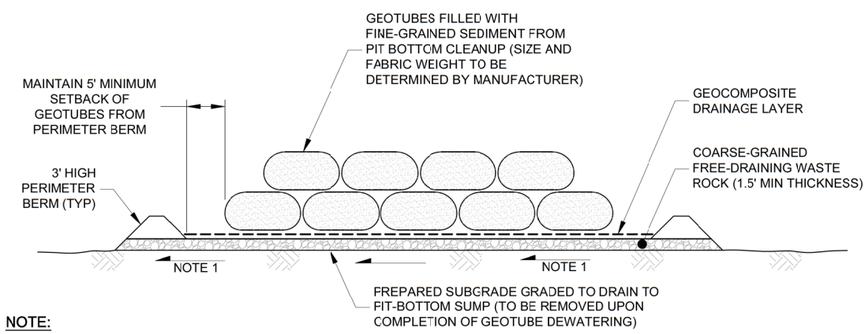

NOTE:

1. GRADE TO DRAIN TO PIT BOTTOM SUMP.

7 4-80 TEMPORARY PIT-BOTTOM SEDIMENT DRYING PAD
NOT TO SCALE

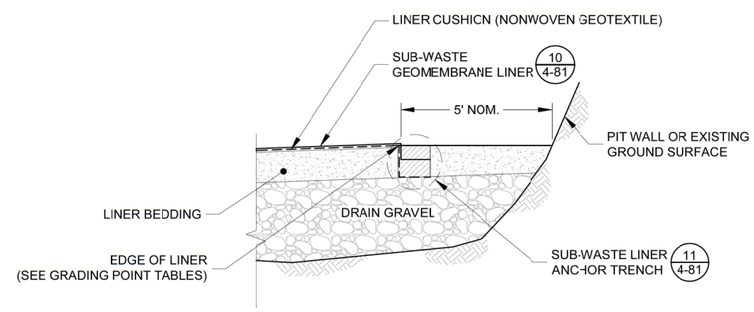

NOTES:

1. REFER TO DETAIL 9 ON SHEET 4–81 FOR EDGE OF LINER IN AREAS WITH A ROCKFALL PROTECTION BERM AT THE TIME OF LINER INSTALLATION.

8 4-80 NON-BERMED LINER TERMINATION TYPICAL SECTION
NOT TO SCALE

ISSUE REV	DESCRIPTION	TECH	ENG	DATE
3	ISSUED FOR 100% DESIGN	KR	SM	06–15
2	ISSUED FOR 90% DESIGN	KR	SM	07–14
1	ISSUED FOR 60% DESIGN	KT	SM	12–13
0	ISSUED FOR 30% DESIGN	DM	SM	12–12

DISCLAIMER:
THIS DRAWING WAS DEVELOPED THROUGH THE APPLICATION OF PROFESSIONAL ENGINEERING SKILL AND PROPRIETARY METHODOLOGIES, PROCESSES AND KNOW-HOW OF MWH AS AUTHOR ALL PURSUANT TO THE TERMS OF A CONTRACTUAL SCOPE OF WORK GOVERNING ITS PREPARATION. THIS DRAWING MAY NOT BE USED OR MODIFIED OTHER THAN IN STRICT ACCORDANCE WITH THE TERMS OF THE GOVERNING CONTRACT AND SCOPE OF WORK OR OTHERWISE ABSENT THE INVOLVEMENT AND CONSENT OF THE AUTHOR. ANY ALTERATION OR ADAPTATION OF THIS DRAWING SHALL BE CONSISTENT WITH THE AUTHOR'S CONTRACTUAL AND PROPRIETARY RIGHTS AND BE AT USER'S SOLE RISK AND WITHOUT ANY LIABILITY OR LEGAL RESPONSIBILITY OF MWH.

DESIGNED BY	S MCMANUS	06–15
DRAWN BY	K REED	06–15
CHECKED BY	T KELLEY	06–15
APPROVED BY	C STRACHAN	06–15
PROJECT MANAGER	V DRAIN	06–15

NEWMONT

PROJECT LOCATION: WELLPINIT, WASHINGTON
PROJECT: MIDNITE MINE
TITLE: DETAILS AND TYPICAL SECTIONS (2 OF 20)

MWH

SHEET: 4-80
REVISION: 3
FILE NAME: 4-76
DATE: JUNE 2015

PW:\\AMENVPWINTO3.MWHGLOBAL.COM:AM_PROJECTS03\DOCUMENTS\FTC2_NEWMONT\MIDNIGHT MINE\RD-RA\013-SHEET SET\2015-01-01 BOOR\04_MINE EXCAV\4-76.dwg

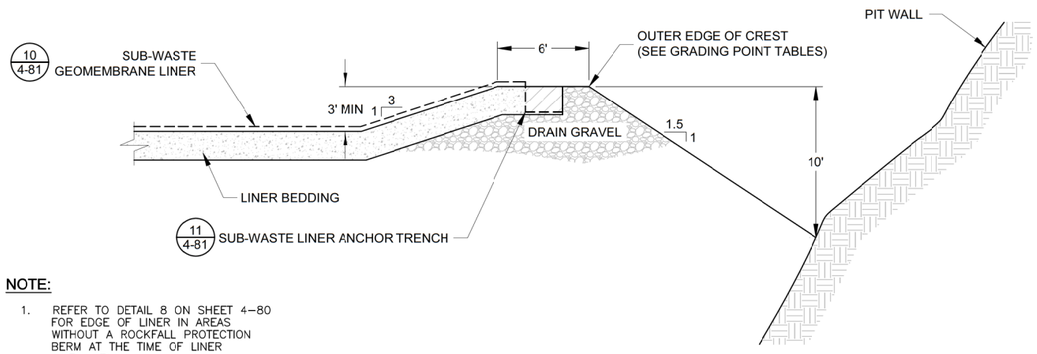

NOTE:

1. REFER TO DETAIL 8 ON SHEET 4–80 FOR EDGE OF LINER IN AREAS WITHOUT A ROCKFALL PROTECTION BERM AT THE TIME OF LINER INSTALLATION.

9 / 4-81 ROCKFALL PROTECTION BERM TYPICAL SECTION

NOT TO SCALE

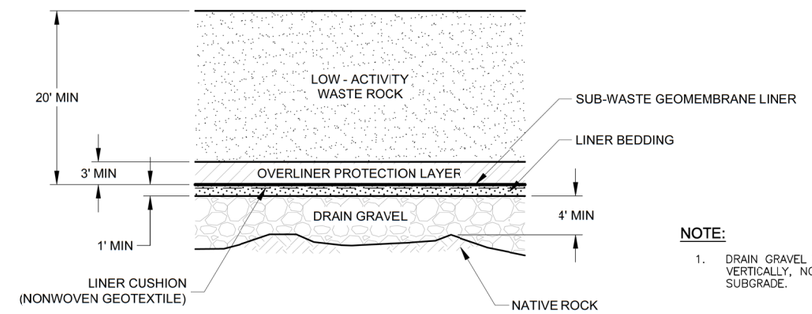

NOTE:

1. DRAIN GRAVEL THICKNESS MEASURED VERTICALLY, NOT PERPENDICULAR TO SUBGRADE.

10 / 4-81 SUB-WASTE GEOMEMBRANE LINER DETAIL

NOT TO SCALE

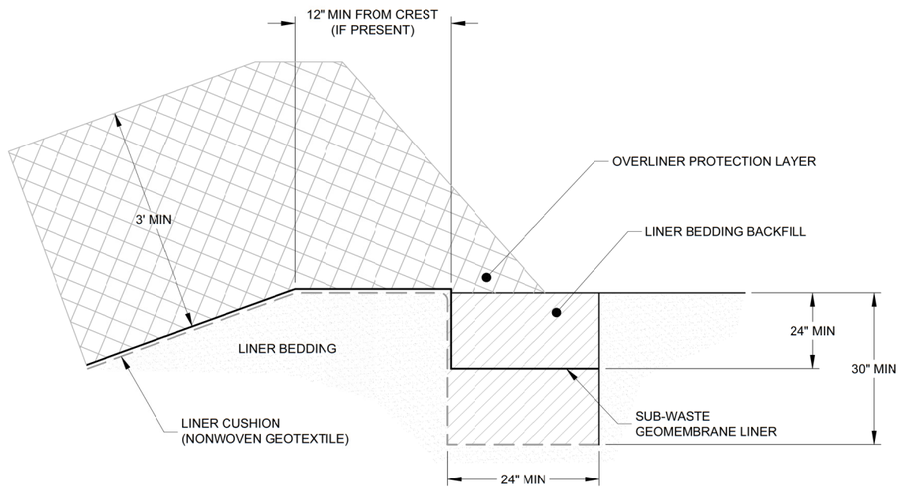

11 / 4-81 SUB-WASTE LINER ANCHOR TRENCH DETAIL

NOT TO SCALE

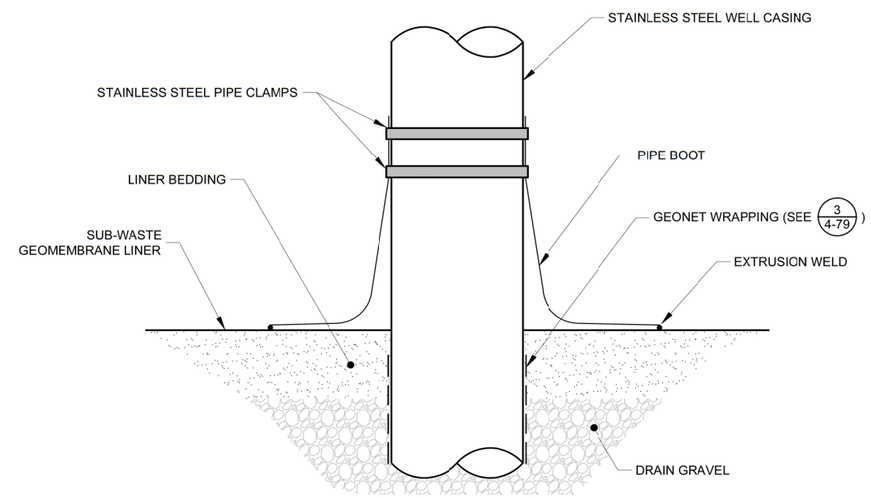

12 / 4-81 SUB-WASTE GEOMEMBRANE LINER BOOT DETAIL

NOT TO SCALE

ISSUE REV	DESCRIPTION	TECH	ENG	DATE
3	ISSUED FOR 100% DESIGN	KR	SM	06–15
2	ISSUED FOR 90% DESIGN	KR	SM	07–14
1	ISSUED FOR 60% DESIGN	KT	SM	12–13
0	ISSUED FOR 30% DESIGN	DM	SM	12–12

DISCLAIMER:
THIS DRAWING WAS DEVELOPED THROUGH THE APPLICATION OF PROFESSIONAL ENGINEERING SKILL AND PROPRIETARY METHODOLOGIES, PROCESSES AND KNOW-HOW OF MWH AS AUTHOR ALL PURSUANT TO THE TERMS OF A CONTRACTUAL SCOPE OF WORK GOVERNING ITS PREPARATION. THIS DRAWING MAY NOT BE USED OR MODIFIED OTHER THAN IN STRICT ACCORDANCE WITH THE TERMS OF THE GOVERNING CONTRACT AND SCOPE OF WORK OR OTHERWISE ABSENT THE INVOLVEMENT AND CONSENT OF THE AUTHOR. ANY ALTERATION OR ADAPTATION OF THIS DRAWING SHALL BE CONSISTENT WITH THE AUTHOR'S CONTRACTUAL AND PROPRIETARY RIGHTS AND BE AT USER'S SOLE RISK AND WITHOUT ANY LIABILITY OR LEGAL RESPONSIBILITY OF MWH.

DESIGNED BY	S MCMANUS	06–15
DRAWN BY	K REED	06–15
CHECKED BY	T KELLEY	06–15
APPROVED BY	C STRACHAN	06–15
PROJECT MANAGER	V DRAIN	06–15

NEWMONT

PROJECT LOCATION: WELLPINIT, WASHINGTON

PROJECT: MIDNITE MINE

TITLE: DETAILS AND TYPICAL SECTIONS (3 OF 20)

MWH

SHEET: 4-81 | REVISION: 3

FILE NAME: 4-76 | DATE: JUNE 2015

PW: \\AMENVPWINTO3.MWHGLOBAL.COM:AM_PROJECTS03\DOCUMENTS\FTC2_NEWMONT\MIDNIGHT MINE\RD-RA\013-SHEET SET\2015-01-01 BOOR\04_MINE EXCAV\4-76.dwg

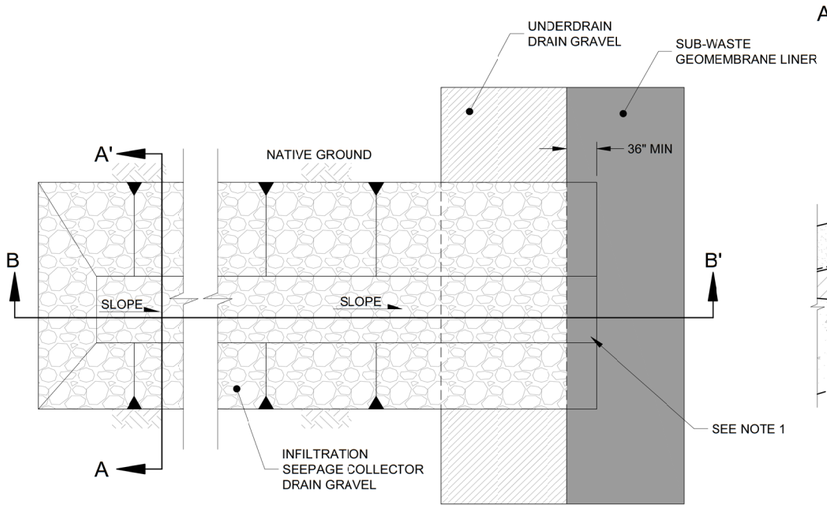

NOTE:

1. EXTEND INFILTRATION COLLECTOR GCL AND DRAIN GRAVEL ON TO SUB-WASTE GEOMEMBRANE LINER.

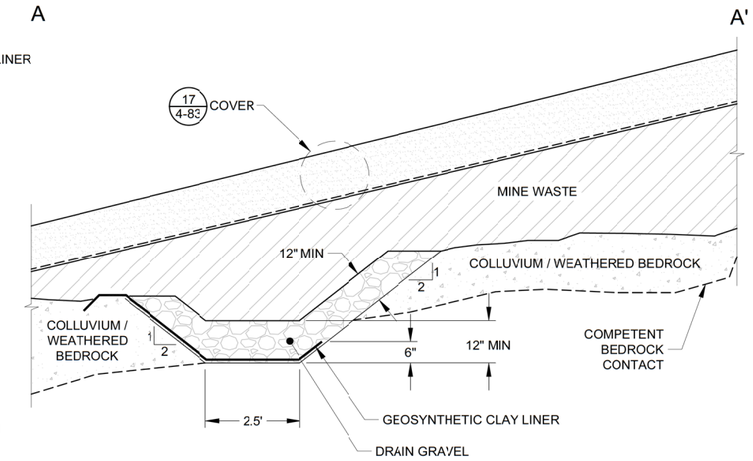

SECTION A-A'

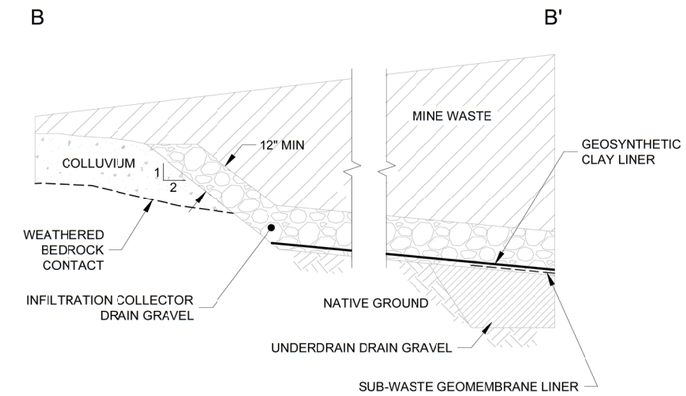

SECTION B-B'

14 / 4-82 PIT 4 INFILTRATION COLLECTOR DETAIL

NOT TO SCALE

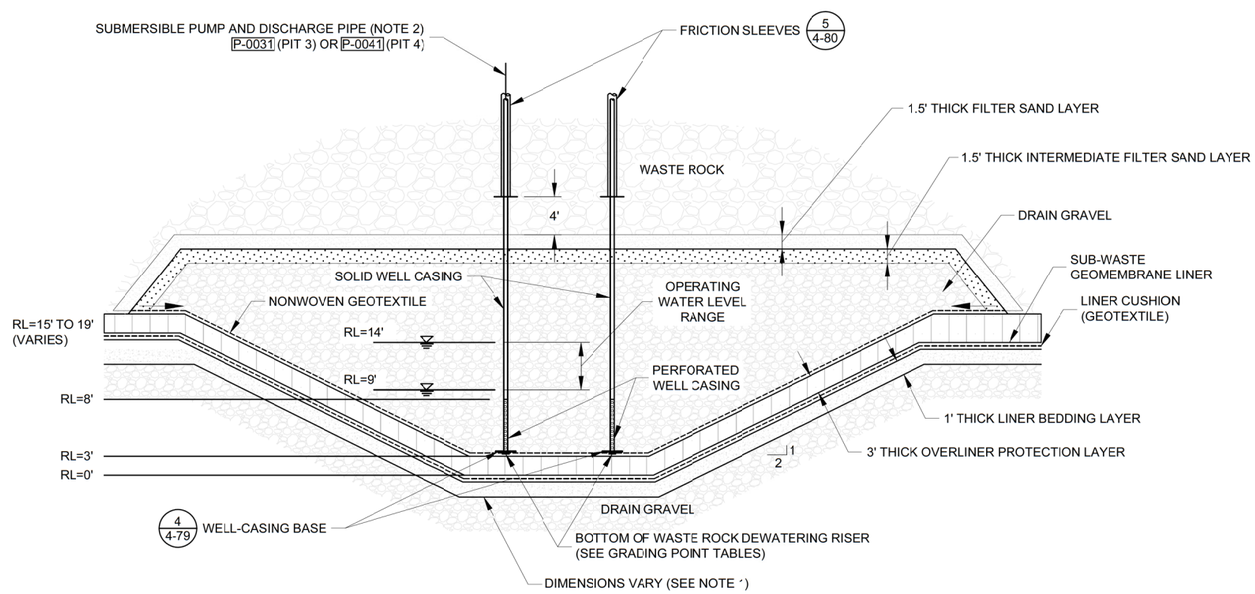

NOTES:

1. SEE SHEETS 4-13 AND 4-40 FOR SUMP GRADING CONTROL POINTS.
2. A SUBMERSIBLE PUMP WILL BE PLACED IN 1 RISER IN EACH WASTE ROCK DEWATERING SUMP (PIT 3 AND PIT 4). THE OTHER RISER IN EACH WASTE ROCK DEWATERING SUMP WILL REMAIN VACANT.

13 / 4-82 WASTE ROCK DEWATERING SUMP

NOT TO SCALE

ISSUE REV	DESCRIPTION	TECH	ENG	DATE
3	ISSUED FOR 100% DESIGN	KR	SM	06-15
2	ISSUED FOR 90% DESIGN	KR	SM	07-14
1	ISSUED FOR 60% DESIGN	KT	SM	12-13
0	ISSUED FOR 30% DESIGN	DM	SM	12-12

DISCLAIMER:
THIS DRAWING WAS DEVELOPED THROUGH THE APPLICATION OF PROFESSIONAL ENGINEERING SKILL AND PROPRIETARY METHODOLOGIES, PROCESSES AND KNOW HOW OF MWH AS AUTHOR ALL PURSUANT TO THE TERMS OF A CONTRACTUAL SCOPE OF WORK GOVERNING ITS PREPARATION. THIS DRAWING MAY NOT BE USED OR MODIFIED OTHER THAN IN STRICT ACCORDANCE WITH THE TERMS OF THE GOVERNING CONTRACT AND SCOPE OF WORK OR OTHERWISE ABSENT THE INVOLVEMENT AND CONSENT OF THE AUTHOR. ANY ALTERATION OR ADAPTATION OF THIS DRAWING SHALL BE CONSISTENT WITH THE AUTHOR'S CONTRACTUAL AND PROPRIETARY RIGHTS AND BE AT USER'S SOLE RISK AND WITHOUT ANY LIABILITY OR LEGAL RESPONSIBILITY OF MWH.

DESIGNED BY	S MCMANUS	06-15
DRAWN BY	K REED II	06-15
CHECKED BY	T KELLEY	06-15
APPROVED BY	C STRACHAN	06-15
PROJECT MANAGER	V DRAIN	06-15

NEWMONT

PROJECT LOCATION: WELLPINIT, WASHINGTON

PROJECT: MIDNITE MINE

TITLE: DETAILS AND TYPICAL SECTIONS (4 OF 20)

MWH

SHEET: 4-82 | REVISION: 3

FILE NAME: 4-76 | DATE: JUNE 2015

P:\:\AMERVPWNT03.MWHGLOBAL.COM:AM_PROJECTS03\DOCUMENTS\FTC2_NEWMONT\MIDNIGHT MINE\RD-RA\013-SHEET SET\2015-01-01 BOOR\04_MINE EXCAV\4-76.dwg

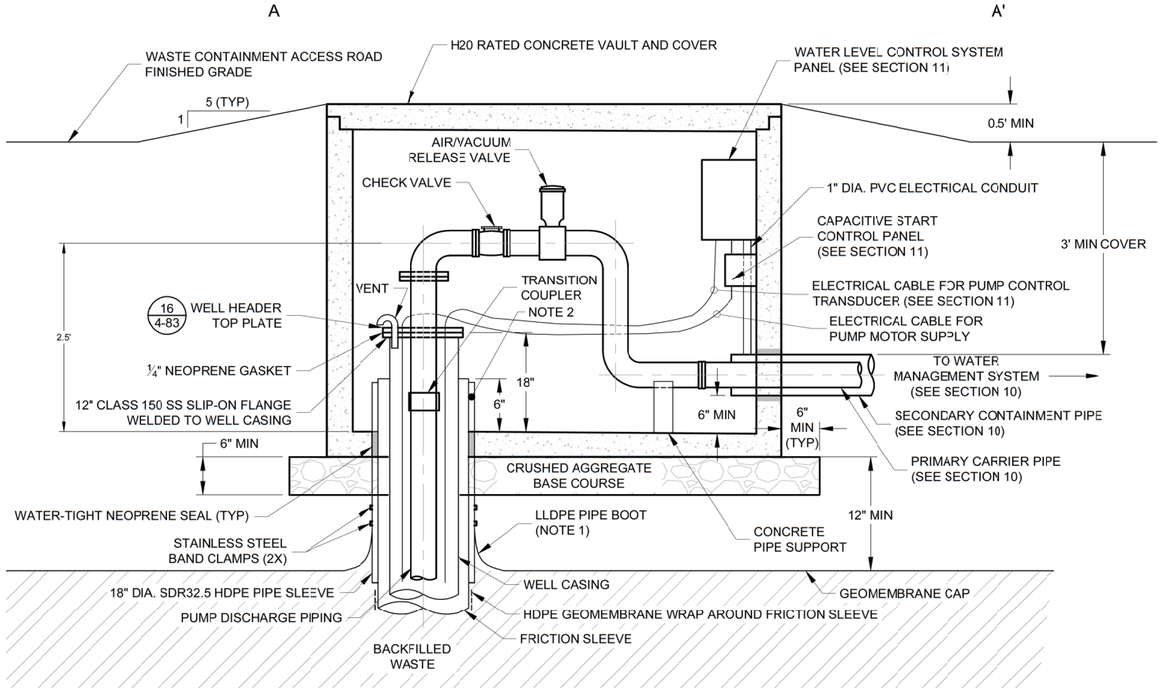

SECTION A-A'

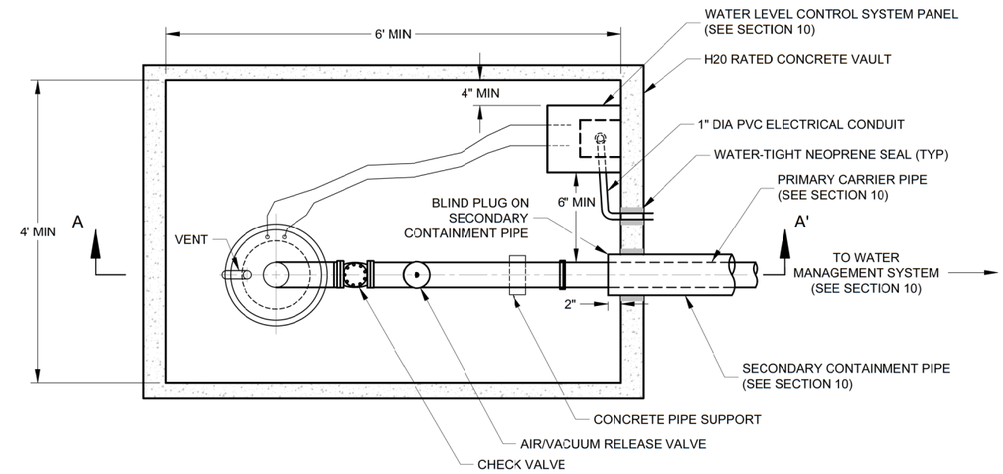

PLAN VIEW

NOTES:

1. EXTRUSION WELD LLDPE PIPE BOOT TO GEOMEMBRANE CAP AND SECURE TO HDPE PIPE SLEEVE WITH 2 SS BAND CLAMPS
2. BACKFILL ANNULUS BETWEEN HDPE PIPE SLEEVE AND FRICTION SLEEVE WITH BENTONITE PELLETS AND HYDRATE.

15 4-83 WELL HEADER VAULT DETAIL
NOT TO SCALE

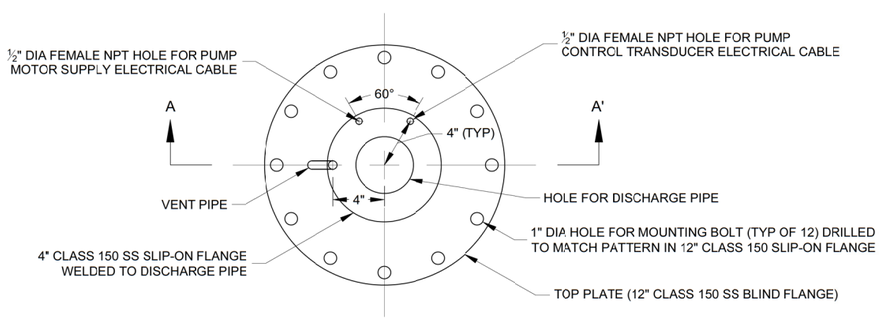

PLAN VIEW

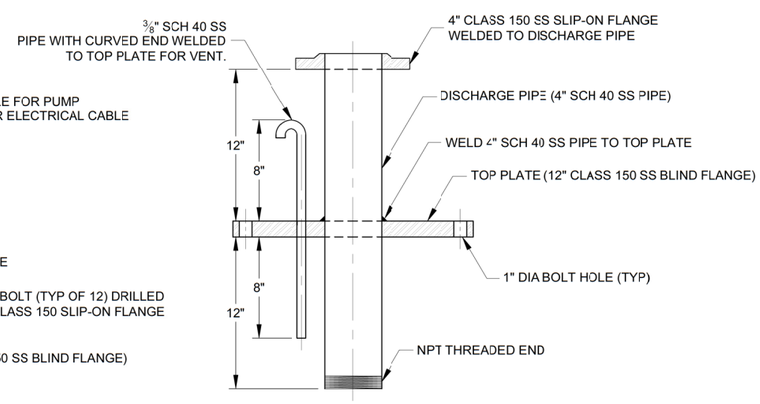

SECTION A-A'

16 4-83 WELL HEADER DETAIL
NOT TO SCALE

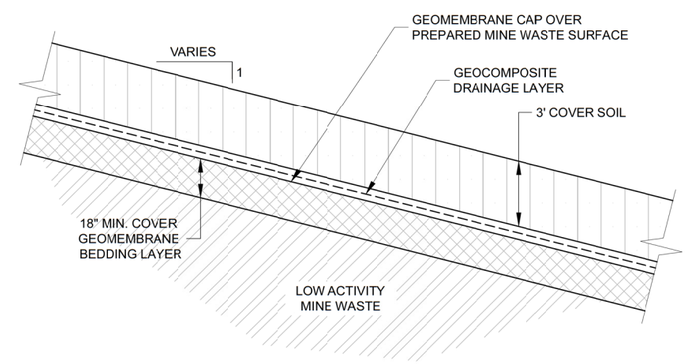

NOTE:

1. GEOCOMPOSITE DRAINAGE LAYER TO BE OMITTED WITHIN GEOCOMPOSITE DRAINAGE LAYER EXCLUSION ZONES. (SEE SHEETS 4-19, AND 4-58).

17 4-83 COVER DETAIL
NOT TO SCALE

ISSUE REV	DESCRIPTION	TECH	ENG	DATE
3	ISSUED FOR 100% DESIGN	KR	SM	06-15
2	ISSUED FOR 90% DESIGN	KR	SM	07-14
1	ISSUED FOR 60% DESIGN	KT	SM	12-13
0	ISSUED FOR 30% DESIGN	DM	SM	12-12

DISCLAIMER:
THIS DRAWING WAS DEVELOPED THROUGH THE APPLICATION OF PROFESSIONAL ENGINEERING SKILL AND PROPRIETARY METHODOLOGIES, PROCESSES AND KNOW-HOW OF MWH AS AUTHOR ALL PURSUANT TO THE TERMS OF A CONTRACTUAL SCOPE OF WORK GOVERNING ITS PREPARATION. THIS DRAWING MAY NOT BE USED OR MODIFIED OTHER THAN IN STRICT ACCORDANCE WITH THE TERMS OF THE GOVERNING CONTRACT AND SCOPE OF WORK OR OTHERWISE ABSENT THE INVOLVEMENT AND CONSENT OF THE AUTHOR. ANY ALTERATION OR ADAPTATION OF THIS DRAWING SHALL BE CONSISTENT WITH THE AUTHOR'S CONTRACTUAL AND PROPRIETARY RIGHTS AND BE AT USER'S SOLE RISK AND WITHOUT ANY LIABILITY OR LEGAL RESPONSIBILITY OF MWH.

DESIGNED BY	S MCMANUS	06-15
DRAWN BY	K REED II	06-15
CHECKED BY	T KELLEY	06-15
APPROVED BY	C STRACHAN	06-15
PROJECT MANAGER	V DRAIN	06-15

NEWMONT

PROJECT LOCATION: WELLPINIT, WASHINGTON
PROJECT: MIDNITE MINE
TITLE: DETAILS AND TYPICAL SECTIONS (5 OF 20)

MWH

SHEET: 4-83
REVISION: 3
FILE NAME: 4-76
DATE: JUNE 2015

PW:\\AMENVPWINTO3.MWHGLOBAL.COM:AM_PRO.ECTS03\DOCUMENTS\FTC2_NEWMONT\MIDNIGHT MINE\RD-RA\013-SHEET SET\2015-01-01 BODR\04_MINE EXCAV\4-76.dwg

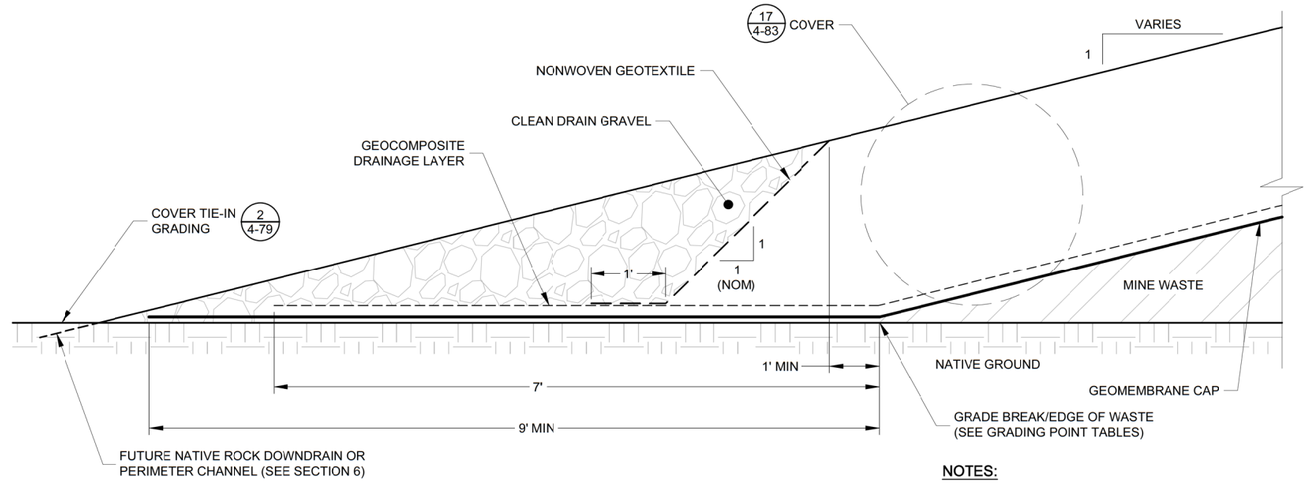

NOTES:

1. THIS DETAIL APPLIES TO AREAS WHERE THE ADJACENT DOWNDRAIN CHANNEL WILL NOT BE RIPRAP LINED. REFER TO DETAIL 19 ON SHEET 4–84 FOR SURFACE COVER TIE–IN IN AREAS WHERE THE ADJACENT DOWNDRAIN CHANNEL WILL BE LINED WITH RIPRAP.
2. REFER TO DETAIL 20 ON SHEET 4–84 FOR INFORMATION REGARDING COVER TIE–IN ALONG EXPOSED PIT HIGHWALLS AND ROCK FACES.

18 / 4-84 SURFACE COVER TIE-IN ADJACENT TO NATIVE ROCK DOWNDRAINS

NOT TO SCALE

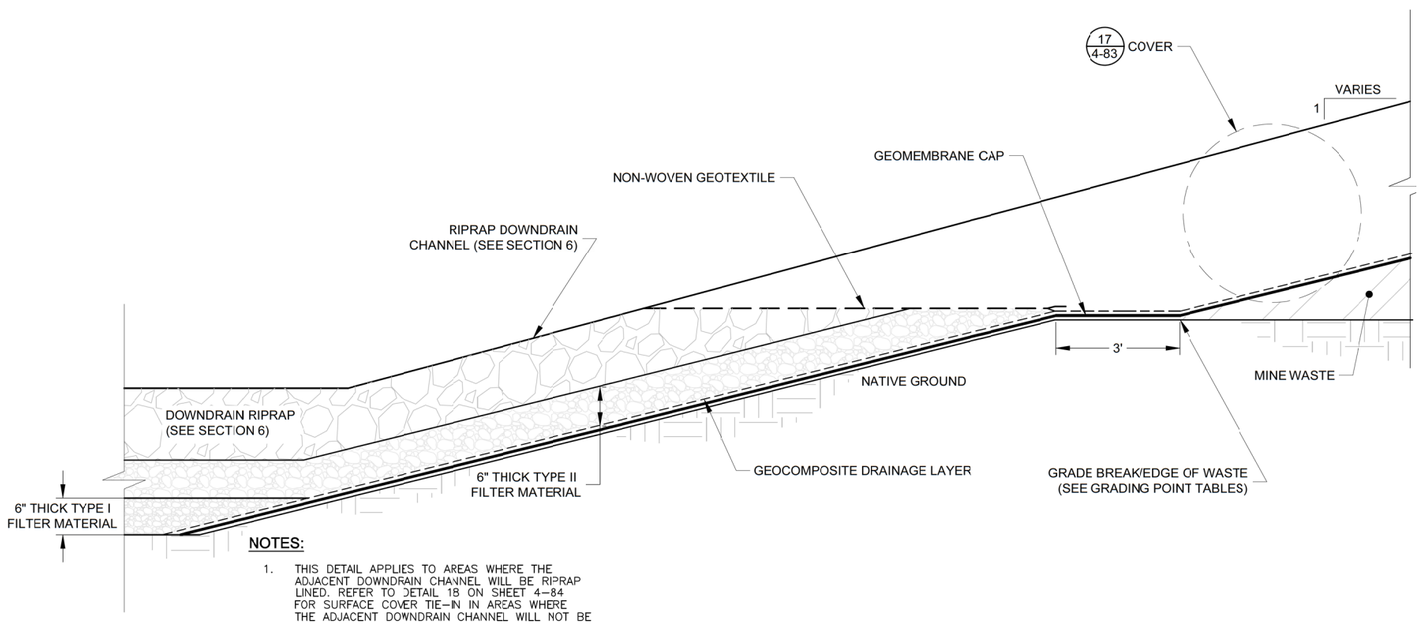

NOTES:

1. THIS DETAIL APPLIES TO AREAS WHERE THE ADJACENT DOWNDRAIN CHANNEL WILL BE RIPRAP LINED. REFER TO DETAIL 18 ON SHEET 4–84 FOR SURFACE COVER TIE–IN IN AREAS WHERE THE ADJACENT DOWNDRAIN CHANNEL WILL NOT BE LINED WITH RIPRAP.
2. REFER TO DETAIL 17 ON SHEET 4–83 FOR INFORMATION REGARDING COVER TIE–IN ALONG EXPOSED PIT HIGHWALLS AND ROCK FACES.

19 / 4-84 SURFACE COVER TIE-IN ADJACENT TO RIPRAP DOWNDRAINS

NOT TO SCALE

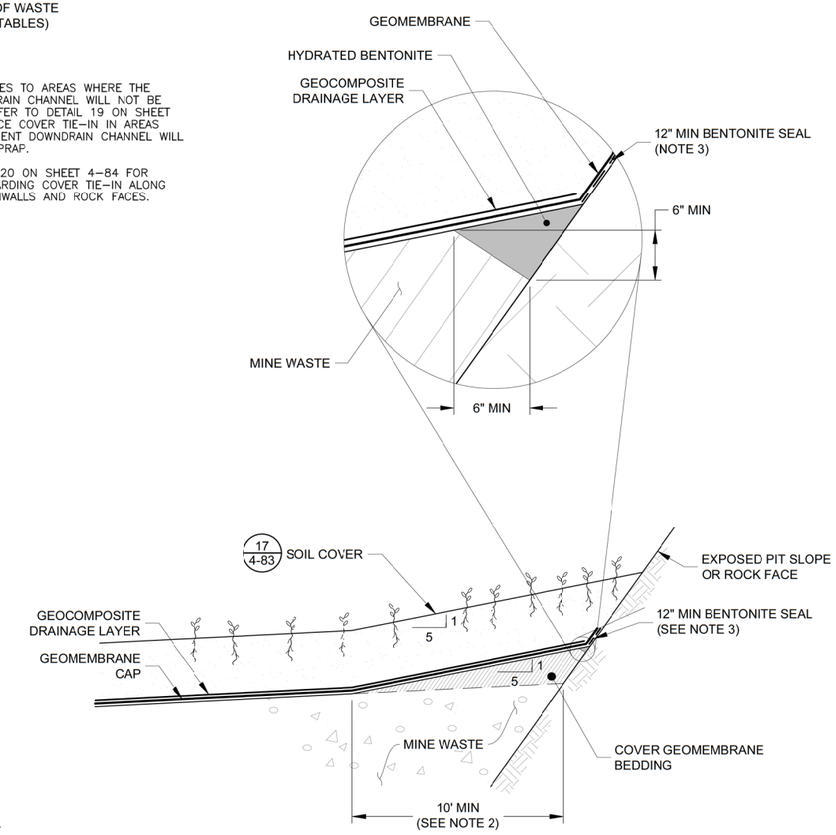

NOTES:

1. ENGINEER APPROVAL REQUIRED AT ALL LOCATIONS WHERE THIS COVER TIE–IN METHOD IS TO BE USED.
2. MOUND COVER GEOMEMBRANE BEDDING FOR OUTER 10' ALONG PERIMETER TO SLOPE AT 20% (5H:1V) AWAY FROM SLOPE CONTACT.
3. SEAL WITH MIN 1 LB GRANULAR BENTONITE PER SQUARE FOOT OF GEOMEMBRANE CONTACT WITH ROCK SLOPE.

20 / 4-84 EXPOSED PIT SLOPE COVER TIE-IN TYPICAL SECTION

NOT TO SCALE

ISSUE REV	DESCRIPTION	TECH	ENG	DATE
3	ISSUED FOR 100% DESIGN	KR	SM	06–15
2	ISSUED FOR 90% DESIGN	KR	SM	07–14
1	ISSUED FOR 60% DESIGN	KT	SM	12–13
0	ISSUED FOR 30% DESIGN	DM	SM	12–12

DISCLAIMER:
THIS DRAWING WAS DEVELOPED THROUGH THE APPLICATION OF PROFESSIONAL ENGINEERING SKILL AND PROPRIETARY METHODOLOGIES, PROCESSES AND KNOW HOW OF MWH AS AUTHOR ALL PURSUANT TO THE TERMS OF A CONTRACTUAL SCOPE OF WORK GOVERNING ITS PREPARATION. THIS DRAWING MAY NOT BE USED OR MODIFIED OTHER THAN IN STRICT ACCORDANCE WITH THE TERMS OF THE GOVERNING CONTRACT AND SCOPE OF WORK OR OTHERWISE ABSENT THE INVOLVEMENT AND CONSENT OF THE AUTHOR. ANY ALTERATION OR ADAPTATION OF THIS DRAWING SHALL BE CONSISTENT WITH THE AUTHOR'S CONTRACTUAL AND PROPRIETARY RIGHTS AND BE AT USER'S SOLE RISK AND WITHOUT ANY LIABILITY OR LEGAL RESPONSIBILITY OF MWH.

DESIGNED BY	S MCMANUS	06–15
DRAWN BY	K REED II	06–15
CHECKED BY	T KELLEY	06–15
APPROVED BY	C STRACHAN	06–15
PROJECT MANAGER	V DRAIN	06–15

NEWMONT

PROJECT LOCATION: WELLPINIT, WASHINGTON
PROJECT: MIDNITE MINE
TITLE: DETAILS AND TYPICAL SECTIONS (6 OF 20)

MWH

SHEET 4-84 | REVISION 3
FILE NAME 4-76 | DATE JUNE 2015

P:W:\AMER\PMNT03.MWHGLOBAL.COM: AM_PROJECTS03\DOCUMENTS\FTC2_NEWMONT\MIDNIGHT MINE\R0-RA\013-SHEET SET\2015-01-01 BOOR\04_MINE EXCAV\4-76.dwg

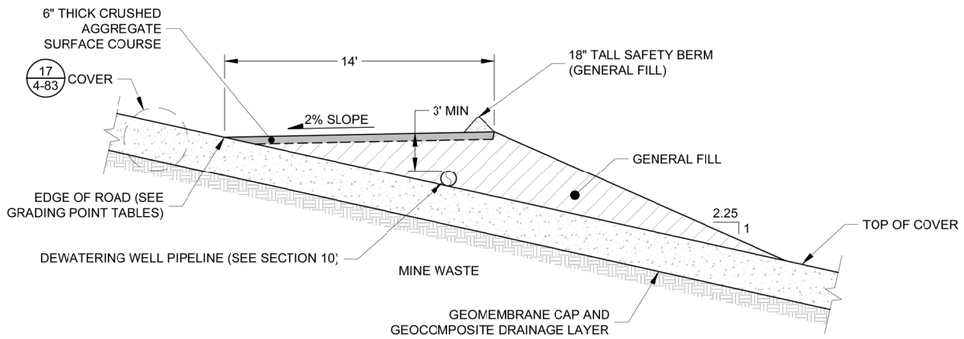

NOTE:

1. REFER TO DETAIL 22 ON SHEET 4–85 FOR PORTIONS OF WCA ACCESS ROADS CONSTRUCTED IN AREAS WHERE COVER SLOPES ARE NOT CONTINUOUS.

21 / 4-85 WCA ACCESS ROAD TYPICAL SECTION

NOT TO SCALE

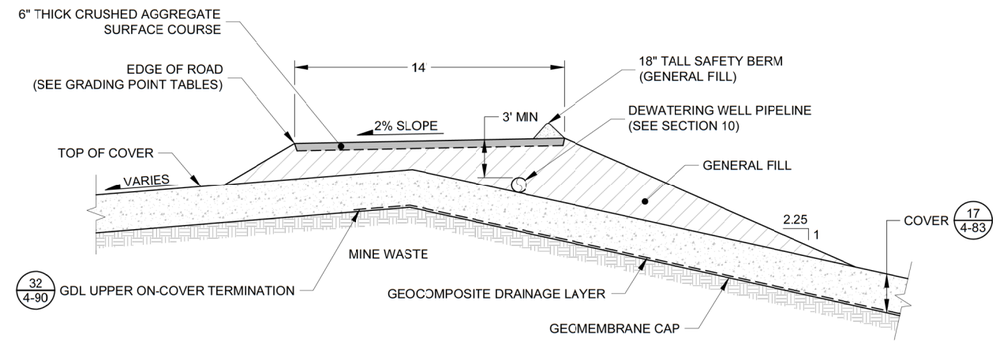

NOTE:

1. REFER TO DETAIL 21 ON SHEET 4–85 FOR PORTIONS OF WCA ACCESS ROADS CONSTRUCTED IN AREAS OF CONTINUOUS COVER SLOPES.

22 / 4-85 ALTERNATE WCA ACCESS ROAD TYPICAL SECTION

NOT TO SCALE

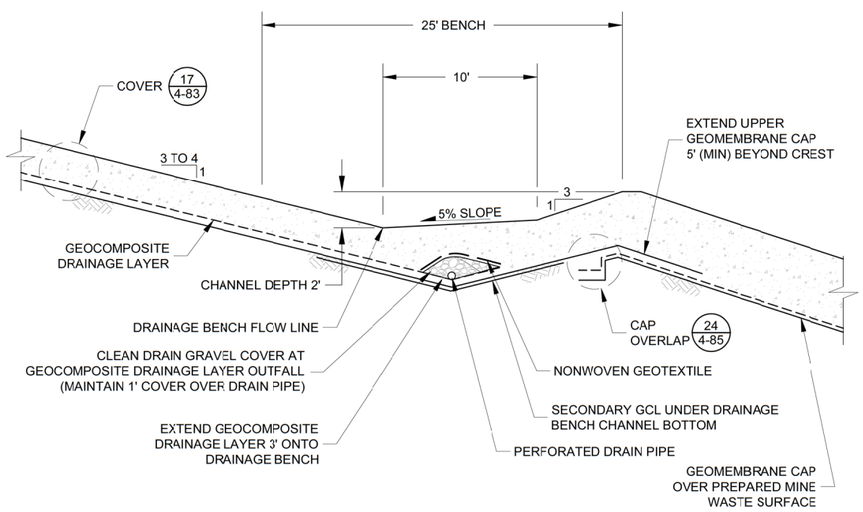

23 / 4-85 DRAINAGE BENCH TYPICAL SECTION

NOT TO SCALE

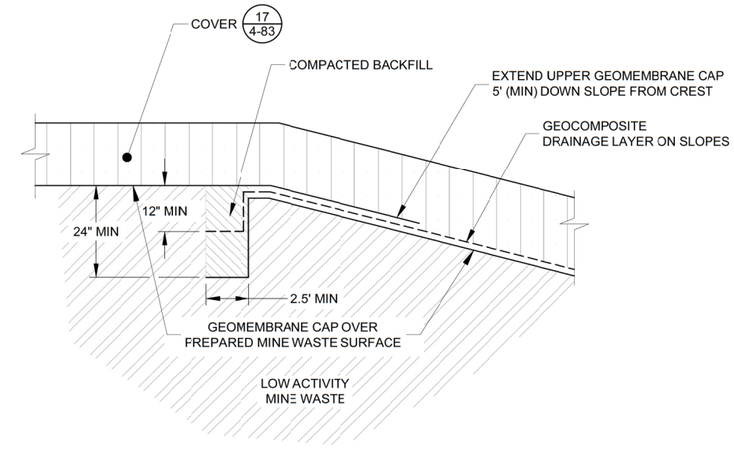

24 / 4-85 CAP OVERLAP DETAIL

NOT TO SCALE

ISSUE REV	DESCRIPTION	TECH	ENG	DATE
3	ISSUED FOR 100% DESIGN	KR	SM	06–15
2	ISSUED FOR 90% DESIGN	KR	SM	07–14
1	ISSUED FOR 60% DESIGN	KT	SM	12–13
0	ISSUED FOR 30% DESIGN	DM	SM	12–12

DISCLAIMER:
THIS DRAWING WAS DEVELOPED THROUGH THE APPLICATION OF PROFESSIONAL ENGINEERING SKILL AND PROPRIETARY METHODOLOGIES, PROCESSES AND KNOW HOW OF MWH AS AUTHOR ALL PURSUANT TO THE TERMS OF A CONTRACTUAL SCOPE OF WORK GOVERNING ITS PREPARATION. THIS DRAWING MAY NOT BE USED OR MODIFIED OTHER THAN IN STRICT ACCORDANCE WITH THE TERMS OF THE GOVERNING CONTRACT AND SCOPE OF WORK OR OTHERWISE ABSENT THE INVOLVEMENT AND CONSENT OF THE AUTHOR. ANY ALTERATION OR ADAPTATION OF THIS DRAWING SHALL BE CONSISTENT WITH THE AUTHOR'S CONTRACTUAL AND PROPRIETARY RIGHTS AND BE AT USER'S SOLE RISK AND WITHOUT ANY LIABILITY OR LEGAL RESPONSIBILITY OF MWH.

DESIGNED BY	S MCMANUS	06–15
DRAWN BY	K REED II	06–15
CHECKED BY	T KELLEY	06–15
APPROVED BY	C STRACHAN	06–15
PROJECT MANAGER	V DRAIN	06–15

NEWMONT

PROJECT LOCATION: WELLPINIT, WASHINGTON

PROJECT: MIDNITE MINE

TITLE: DETAILS AND TYPICAL SECTIONS (7 OF 20)

MWH

SHEET: 4-85 | REVISION: 3

FILE NAME: 4-76 | DATE: JUNE 2015

PW: \\AMERVPWINT03.MWHGLOBAL.COM:AM_PROJECTS03\DOCUMENTS\FTC2_NEWMONT\MIDNIGHT MINE\RD-RA\013-SHEET SET\2015-01-01 BOOR\04_MINE EXCAV\4-76.dwg

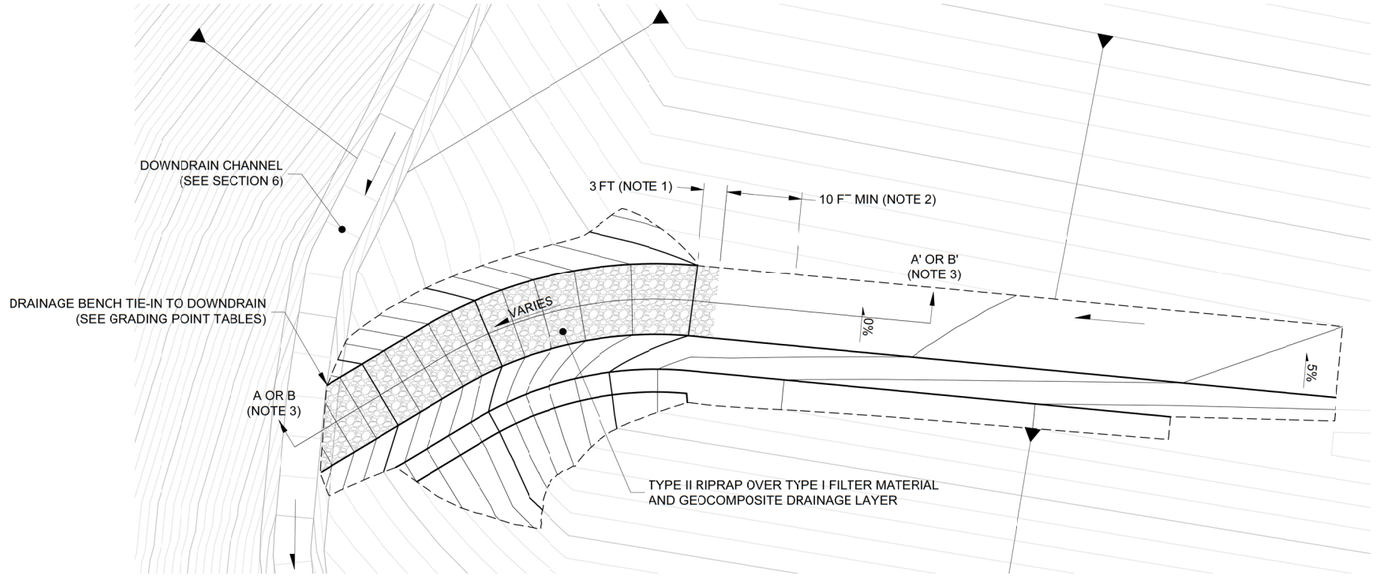

PLAN VIEW

NOTES:

1. BEGIN RIPRAP 3-FT UPSLOPE OF SLOPE BREAK.
2. TRANSITION CHANNEL BOTTOM CROSS SLOPE FROM 5% TO FLAT OVER A DISTANCE OF AT LEAST 10 FEET.
3. IF DOWNDRAIN AT TRANSITION IS EXCAVATED INTO BEDROCK, REFER TO SECTION A-A'. IF DOWNDRAIN AT TRANSITION IS RIPRAP-LINED, REFER TO SECTION B-B'.
4. EXCAVATION INTO BEDROCK WILL BE GRADED TO DRAIN ALONG LONGITUDINAL AXIS OF DOWNDRAIN.

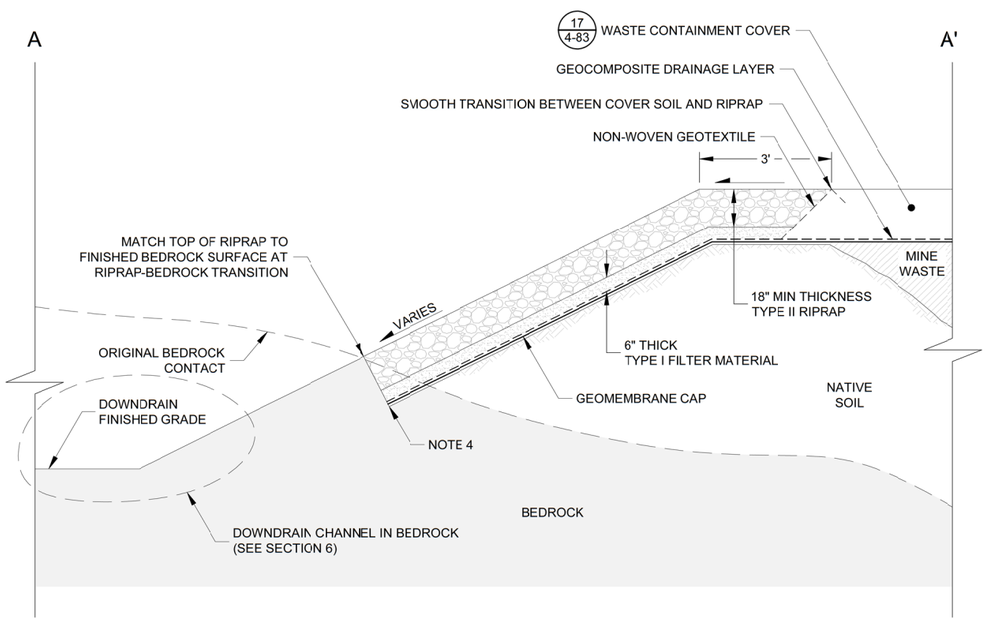

SECTION A-A'

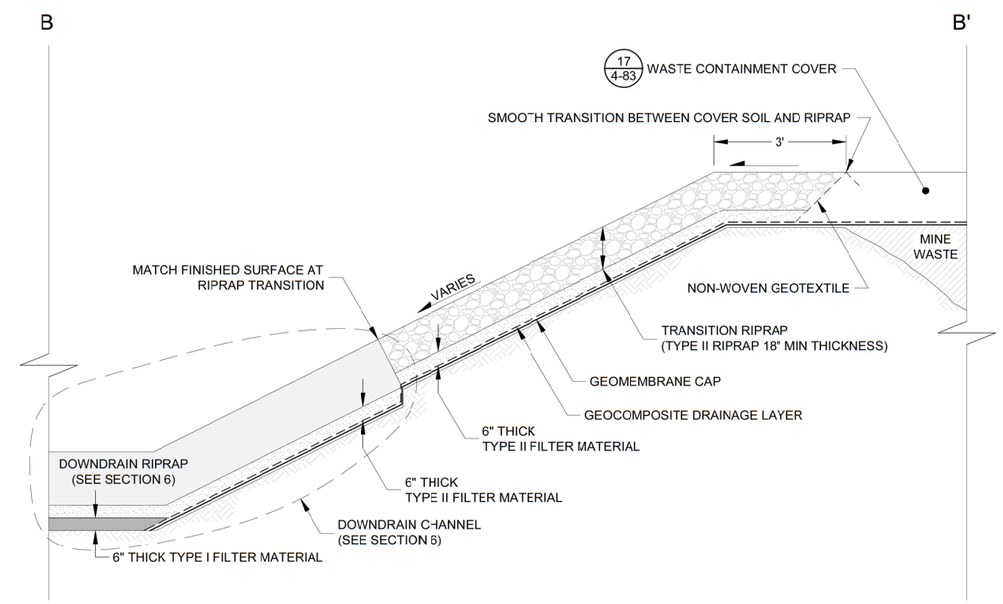

SECTION B-B'

25
4-86
TYPICAL ON-COVER BENCH CHANNEL TO DOWNDRAIN TRANSITION
NOT TO SCALE

ISSUE REV	DESCRIPTION	TECH	ENG	DATE
3	ISSUED FOR 100% DESIGN	KR	SM	06-15
2	ISSUED FOR 90% DESIGN	KR	SM	07-14
1	ISSUED FOR 60% DESIGN	KT	SM	12-13
0	ISSUED FOR 30% DESIGN	DM	SM	12-12

DISCLAIMER:
THIS DRAWING WAS DEVELOPED THROUGH THE APPLICATION OF PROFESSIONAL ENGINEERING SKILL AND PROPRIETARY METHODOLOGIES, PROCESSES AND KNOW HOW OF MWH AS AUTHOR ALL PURSUANT TO THE TERMS OF A CONTRACTUAL SCOPE OF WORK GOVERNING ITS PREPARATION. THIS DRAWING MAY NOT BE USED OR MODIFIED OTHER THAN IN STRICT ACCORDANCE WITH THE TERMS OF THE GOVERNING CONTRACT AND SCOPE OF WORK OR OTHERWISE ABSENT THE INVOLVEMENT AND CONSENT OF THE AUTHOR. ANY ALTERATION OR ADAPTATION OF THIS DRAWING SHALL BE CONSISTENT WITH THE AUTHOR'S CONTRACTUAL AND PROPRIETARY RIGHTS AND BE AT USER'S SOLE RISK AND WITHOUT ANY LIABILITY OR LEGAL RESPONSIBILITY OF MWH.

DESIGNED BY	S MCMANUS	06-15
DRAWN BY	K REED II	06-15
CHECKED BY	T KELLEY	06-15
APPROVED BY	C STRACHAN	06-15
PROJECT MANAGER	V DRAIN	06-15

NEWMONT

PROJECT LOCATION: WELLPINIT, WASHINGTON
PROJECT: MIDNITE MINE
TITLE: DETAILS AND TYPICAL SECTIONS (8 OF 20)

MWH

SHEET: 4-86
REVISION: 3
FILE NAME: 4-76
DATE: JUNE 2015

PW:\\AMERVPWINTO3.MWHGLOBAL.COM:AM_PROJECTS03\DOCUMENTS\FTC2_NEWMONT\MIDNIGHT MINE\RD-RA\013-SHEET SET\2015-01-01 BODR\04_MINE EXCAV\4-76.dwg

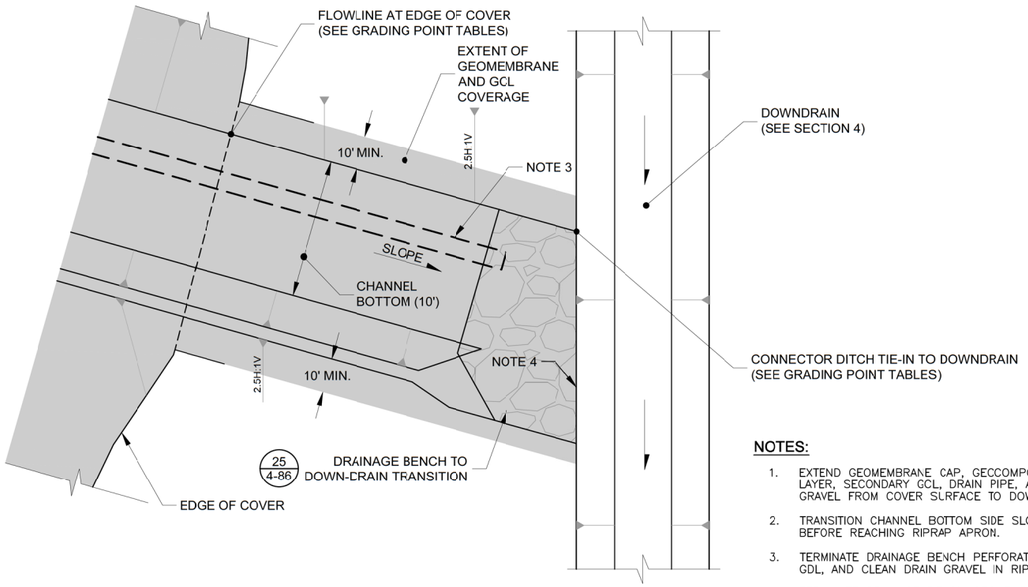

NOTES:

1. EXTEND GEOMEMBRANE CAP, GECCOMPOSITE DRAINAGE LAYER, SECONDARY GCL, DRAIN PIPE, AND CLEAN DRAIN GRAVEL FROM COVER SURFACE TO DOWN-DRAIN.
2. TRANSITION CHANNEL BOTTOM SIDE SLOPE TO BE FLAT BEFORE REACHING RIPRAP APRON.
3. TERMINATE DRAINAGE BENCH PERFORATED DRAIN PIPE, GDL, AND CLEAN DRAIN GRAVEL IN RIP RAP.
4. TERMINATE DRAINAGE BENCH GEOMEMBRANE AND GCL AT CREST OF DOWN-DRAIN.

26 / 4-87 OFF-COVER CONNECTOR DITCH DETAIL
NOT TO SCALE

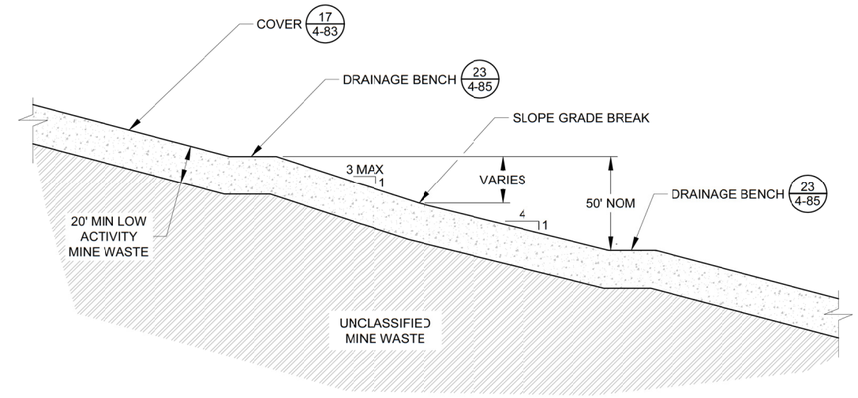

27 / 4-87 TYPICAL SLOPE GRADING DETAIL
NOT TO SCALE

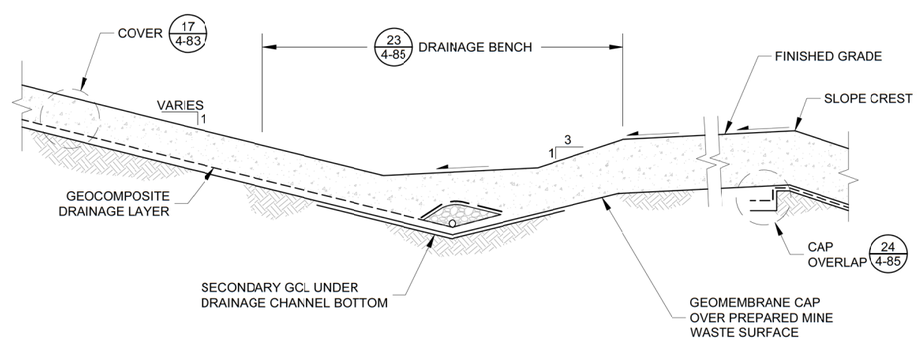

28 / 4-87 BACK-SLOPED COVER TYPICAL SECTION
NOT TO SCALE

REV	DESCRIPTION	TECH	ENG	DATE
3	ISSUED FOR 100% DESIGN	KR	SM	06–15
2	ISSUED FOR 90% DESIGN	KR	SM	07–14

ISSUE

DISCLAIMER:
THIS DRAWING WAS DEVELOPED THROUGH THE APPLICATION OF PROFESSIONAL ENGINEERING SKILL AND PROPRIETARY METHODOLOGIES, PROCESSES AND KNOW-HOW OF MWH AS AUTHOR ALL PURSUANT TO THE TERMS OF A CONTRACTUAL SCOPE OF WORK GOVERNING ITS PREPARATION. THIS DRAWING MAY NOT BE USED OR MODIFIED OTHER THAN IN STRICT ACCORDANCE WITH THE TERMS OF THE GOVERNING CONTRACT AND SCOPE OF WORK OR OTHERWISE ABSENT THE INVOLVEMENT AND CONSENT OF THE AUTHOR. ANY ALTERATION OR ADAPTATION OF THIS DRAWING SHALL BE CONSISTENT WITH THE AUTHOR'S CONTRACTUAL AND PROPRIETARY RIGHTS AND BE AT USER'S SOLE RISK AND WITHOUT ANY LIABILITY OR LEGAL RESPONSIBILITY OF MWH.

DESIGNED BY	S MCMANUS	06–15
DRAWN BY	K REED II	06–15
CHECKED BY	T KELLEY	06–15
APPROVED BY	C STRACHAN	06–15
PROJECT MANAGER	V DRAIN	06–15

NEWMONT

PROJECT LOCATION: WELLPINIT, WASHINGTON
PROJECT: MIDNITE MINE
TITLE: DETAILS AND TYPICAL SECTIONS (9 OF 20)

MWH

SHEET: 4-87
REVISION: 3
FILE NAME: 4-76
DATE: JUNE 2015

PW: \\AMENVPWINTO3.MWHGLOBAL.COM:AM_PROJECTS03\DOCUMENTS\FTC2_NEWMONT\MIDNIGHT MINE\RD-RA\013-SHEET SET\2015-01-01 BODR\04_MINE EXCAV\4-76.dwg

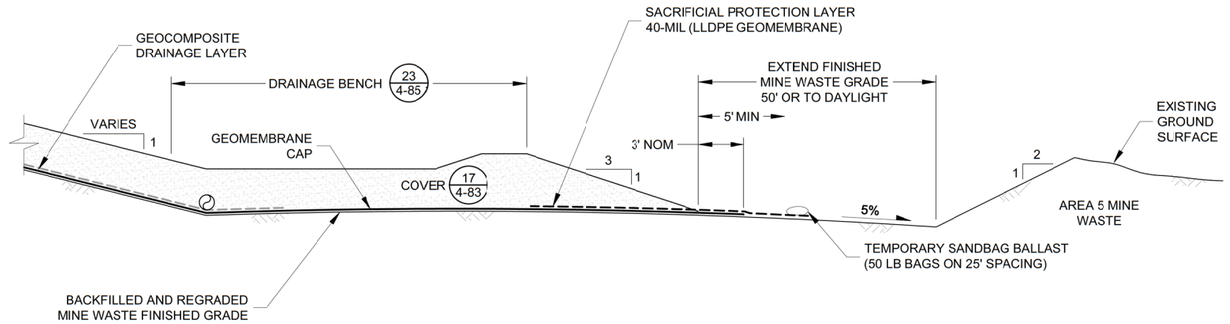

NOTE:

1. REFER TO DETAIL 30 ON SHEET 4–88 FOR PIT 4 TOE TIE–IN DETAIL – PHASE 2.

29 / 4-88 PIT 4 TOE TIE-IN DETAIL - PHASE 1

NOT TO SCALE

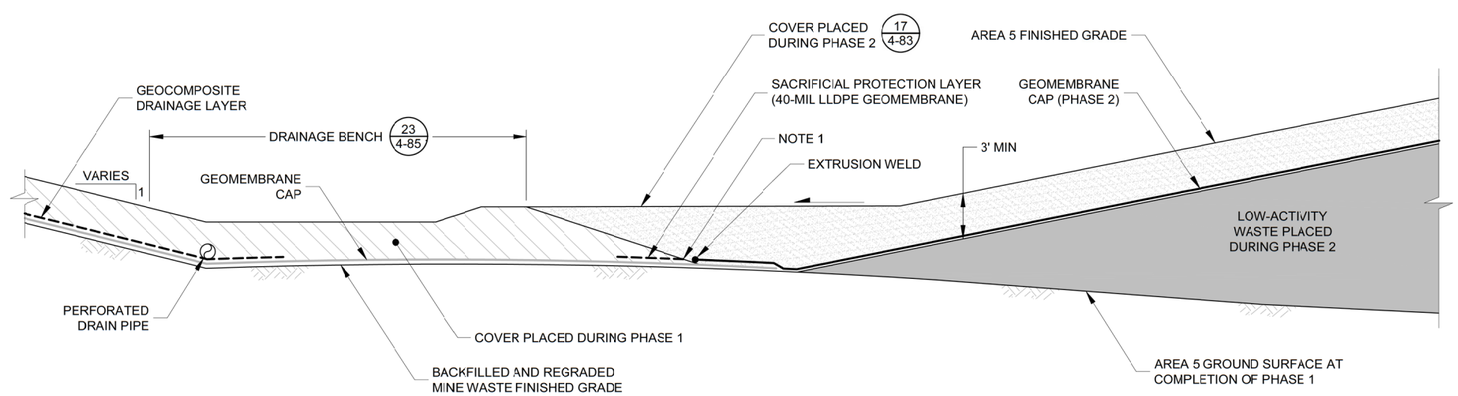

NOTE:

1. TRIM PHASE 1 SACRIFICIAL PROTECTION LAYER TO TOE OF PHASE 1 COVER AND WELD PHASE 2 GEOMEMBRANE CAP TO THE PHASE 1 GEOMEMBRANE CAP AFTER FINAL REGRADING OF AREA 5 WASTE.

30 / 4-88 PIT 4 TOE TIE-IN DETAIL - PHASE 2

NOT TO SCALE

REV	DESCRIPTION	TECH	ENG	DATE
3	ISSUED FOR 100% DESIGN	KR	SM	06–15
2	ISSUED FOR 90% DESIGN	KR	SM	07–14

ISSUE

DISCLAIMER:
THIS DRAWING WAS DEVELOPED THROUGH THE APPLICATION OF PROFESSIONAL ENGINEERING SKILL AND PROPRIETARY METHODOLOGIES, PROCESSES AND KNOW-HOW OF MWH AS AUTHOR ALL PURSUANT TO THE TERMS OF A CONTRACTUAL SCOPE OF WORK GOVERNING ITS PREPARATION. THIS DRAWING MAY NOT BE USED OR MODIFIED OTHER THAN IN STRICT ACCORDANCE WITH THE TERMS OF THE GOVERNING CONTRACT AND SCOPE OF WORK OR OTHERWISE ABSENT THE INVOLVEMENT AND CONSENT OF THE AUTHOR. ANY ALTERATION OR ADAPTATION OF THIS DRAWING SHALL BE CONSISTENT WITH THE AUTHOR'S CONTRACTUAL AND PROPRIETARY RIGHTS AND BE AT USER'S SOLE RISK AND WITHOUT ANY LIABILITY OR LEGAL RESPONSIBILITY OF MWH.

DESIGNED BY	S MCMANUS	06–15
DRAWN BY	K REED II	06–15
CHECKED BY	T KELLEY	06–15
APPROVED BY	C STRACHAN	06–15
PROJECT MANAGER	V DRAIN	06–15

NEWMONT

PROJECT LOCATION: WELLPINIT, WASHINGTON

PROJECT: MIDNITE MINE

TITLE: DETAILS AND TYPICAL SECTIONS (10 OF 20)

MWH

SHEET: 4-88

REVISION: 3

FILE NAME: 4-76

DATE: JUNE 2015

PW: \\AMENVPWINTO3.MWHGLOBAL.COM:AM_PROJECTS03\DOCUMENTS\FTC2_NEWMONT\MIDNIGHT MINE\RD-RA\013-SHEET SET\2015-01-01 BOOR\04_MINE EXCAV\4-76.dwg

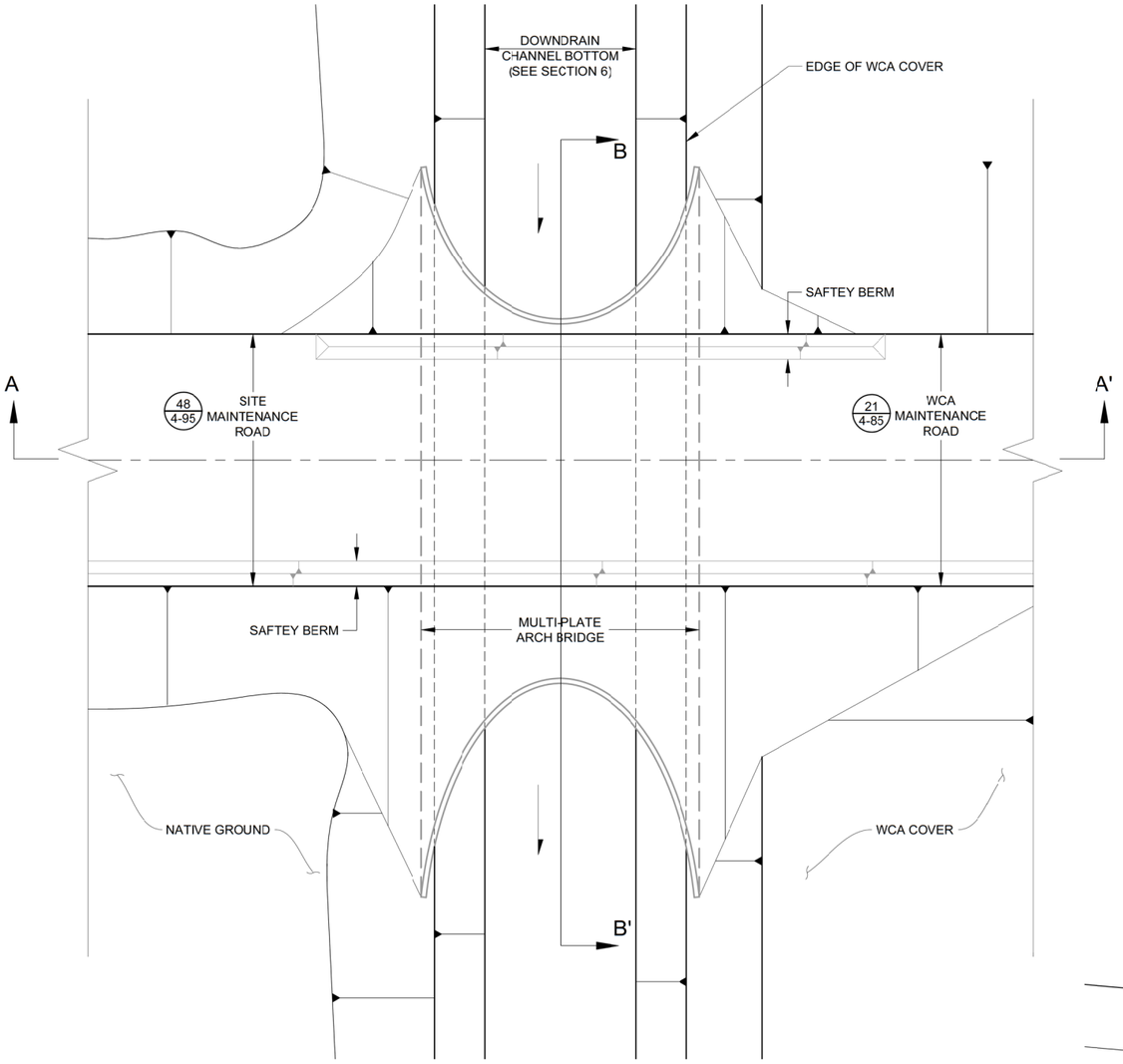

PLAN VIEW

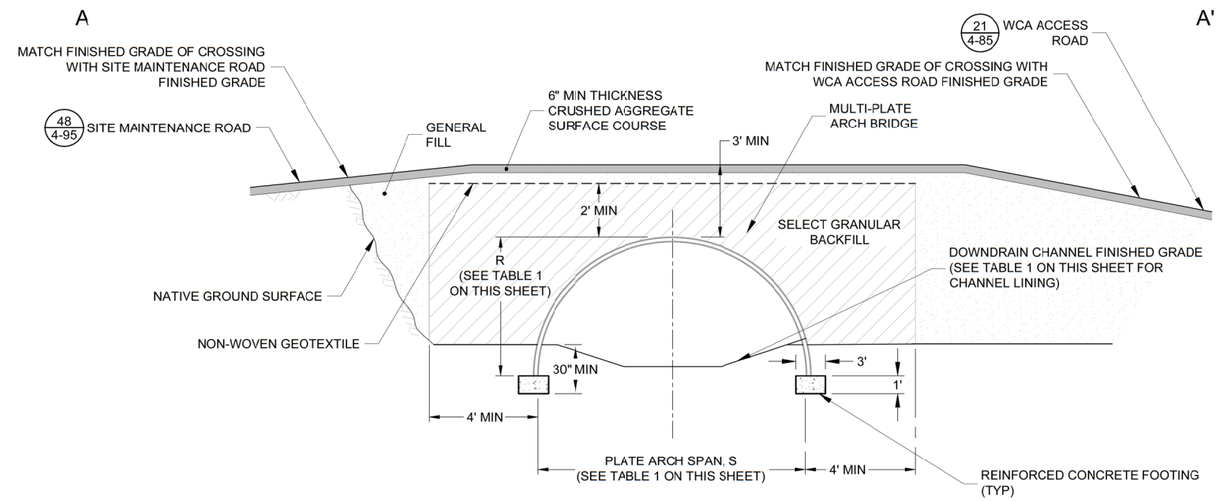

SECTION A-A'

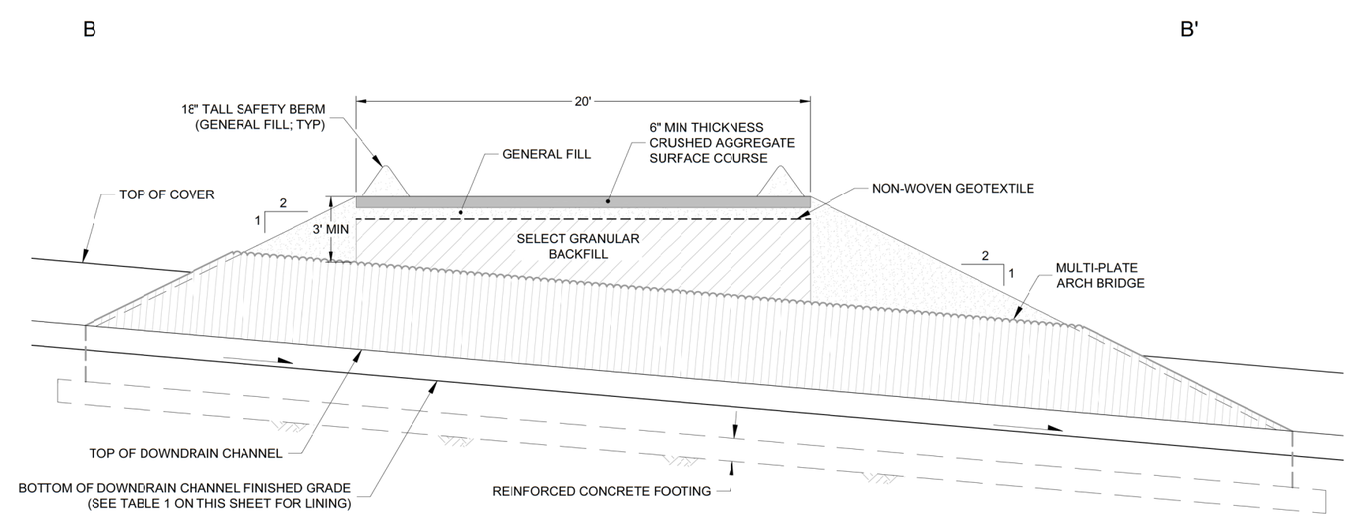

SECTION B-B'

TABLE 1 - MULTI-PLATE ARCH BRIDGE CROSSINGS

ROAD NAME	DOWNDRAIN CROSSED	APPROX. DOWNDRAIN STATION (SEE SECTION 6)	DOWNDRAIN LINING (SEE SECTION 6)	PLATE ARCH SPAN, S (FT)	PLATE ARCH RISE, R (IN)
PIT 4 DEWATERING WELLS WCA ACCESS ROAD	PIT 4 WEST DOWNDRAIN	18+70	NATIVE ROCK	12	60
PIT 3 DEWATERING WELLS WCA ACCESS ROAD	PIT 3 WEST DOWNDRAIN (ON-COVER)	3+08	RIPRAP	16	85
BPA DEWATERING WELLS WCA ACCESS ROAD	PIT 3 WEST DOWNDRAIN	17+70	NATIVE ROCK	12	60

31 / 4-89 MAINTENANCE ROAD DOWNDRAIN CROSSING

NOT TO SCALE

ISSUE REV	DESCRIPTION	TECH	ENG	DATE
3	ISSUED FOR 100% DESIGN	KR	SM	06–15
2	ISSUED FOR 90% DESIGN	KR	SM	07–14

DISCLAIMER:
THIS DRAWING WAS DEVELOPED THROUGH THE APPLICATION OF PROFESSIONAL ENGINEERING SKILL AND PROPRIETARY METHODOLOGIES, PROCESSES AND KNOW-HOW OF MWH AS AUTHOR ALL PURSUANT TO THE TERMS OF A CONTRACTUAL SCOPE OF WORK GOVERNING ITS PREPARATION. THIS DRAWING MAY NOT BE USED OR MODIFIED OTHER THAN IN STRICT ACCORDANCE WITH THE TERMS OF THE GOVERNING CONTRACT AND SCOPE OF WORK OR OTHERWISE ABSENT THE INVOLVEMENT AND CONSENT OF THE AUTHOR. ANY ALTERATION OR ADAPTATION OF THIS DRAWING SHALL BE CONSISTENT WITH THE AUTHOR'S CONTRACTUAL AND PROPRIETARY RIGHTS AND BE AT USER'S SOLE RISK AND WITHOUT ANY LIABILITY OR LEGAL RESPONSIBILITY OF MWH.

DESIGNED BY	S MCMANUS	06–15
DRAWN BY	K REED II	06–15
CHECKED BY	T KELLEY	06–15
APPROVED BY	C STRACHAN	06–15
PROJECT MANAGER	V DRAIN	06–15

NEWMONT

PROJECT LOCATION: WELLPINIT, WASHINGTON

PROJECT: MIDNITE MINE

TITLE: DETAILS AND TYPICAL SECTIONS (11 OF 20)

MWH

SHEET: 4-89 | REVISION: 3

FILE NAME: 4-76 | DATE: JUNE 2015

PW:\\AMENVPWINTO3.MWHGLOBAL.COM:AM_PRO.ECTS03\DOCUMENTS\FTC2_NEWMONT\MIDNIGHT MINE\RD-RA\013-SHEET SET\2015-01-01 BOOR\04_MINE EXCAV\4-76.dwg

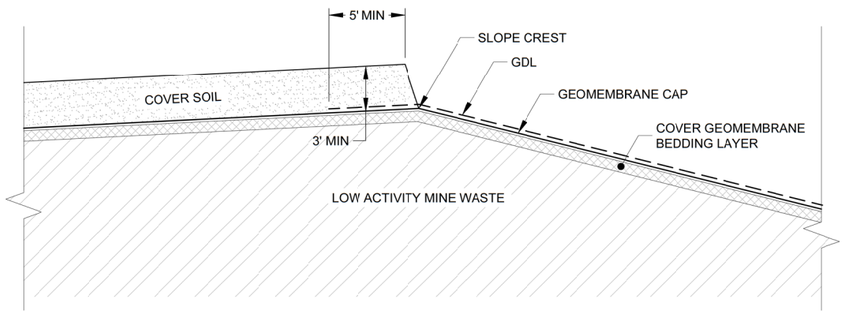

32 / 4-90 GEOCOMPOSITE DRAINAGE LAYER UPPER ON-COVER TERMINATION ANCHORAGE
NOT TO SCALE

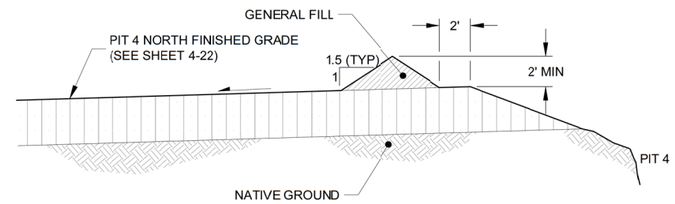

33 / 4-90 PIT 4 NORTH RUN-ON CONTROL BERM DETAIL
NOT TO SCALE

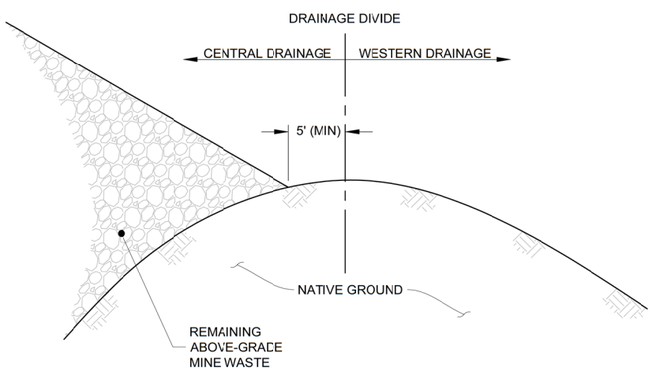

34 / 4-90 WESTERN DRAINAGE DIVIDE TYPICAL SECTION
NOT TO SCALE

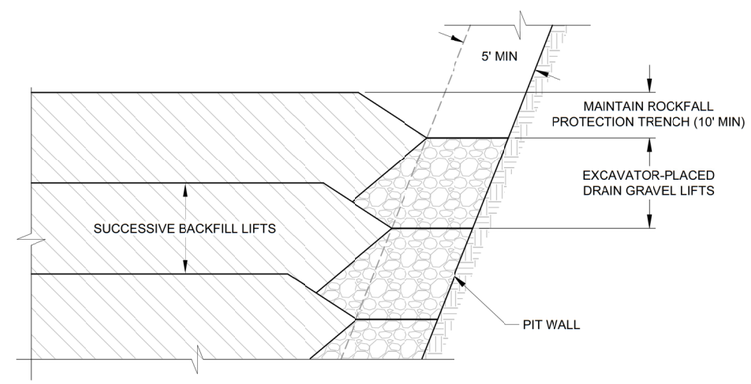

35 / 4-90 SLOPE DRAIN TYPICAL SECTION
NOT TO SCALE

ISSUE REV	DESCRIPTION	TECH	ENG	DATE
3	ISSUED FOR 100% DESIGN	KR	SM	06–15
2	ISSUED FOR 90% DESIGN	KR	SM	07–14

DISCLAIMER:
THIS DRAWING WAS DEVELOPED THROUGH THE APPLICATION OF PROFESSIONAL ENGINEERING SKILL AND PROPRIETARY METHODOLOGIES, PROCESSES AND KNOW-HOW OF MWH AS AUTHOR ALL PURSUANT TO THE TERMS OF A CONTRACTUAL SCOPE OF WORK GOVERNING ITS PREPARATION. THIS DRAWING MAY NOT BE USED OR MODIFIED OTHER THAN IN STRICT ACCORDANCE WITH THE TERMS OF THE GOVERNING CONTRACT AND SCOPE OF WORK OR OTHERWISE ABSENT THE INVOLVEMENT AND CONSENT OF THE AUTHOR. ANY ALTERATION OR ADAPTATION OF THIS DRAWING SHALL BE CONSISTENT WITH THE AUTHOR'S CONTRACTUAL AND PROPRIETARY RIGHTS AND BE AT USER'S SOLE RISK AND WITHOUT ANY LIABILITY OR LEGAL RESPONSIBILITY OF MWH.

DESIGNED BY	S MCMANUS	06–15
DRAWN BY	K REED II	06–15
CHECKED BY	T KELLEY	06–15
APPROVED BY	C STRACHAN	06–15
PROJECT MANAGER	V DRAIN	06–15

NEWMONT

PROJECT LOCATION: WELLPINIT, WASHINGTON
PROJECT: MIDNITE MINE
TITLE: DETAILS AND TYPICAL SECTIONS (12 OF 20)

MWH

SHEET: 4-90
REVISION: 3
FILE NAME: 4-76
DATE: JUNE 2015

PW: \\AMENVPWINTO3.MWHGLOBAL.COM:AM_PROJECTS03\DOCUMENTS\FTC2_NEWMONT\MIDNIGHT MINE\RD-RA\013-SHEET SET\2015-01-01 BODR\04_MINE EXCAV\4-76.dwg

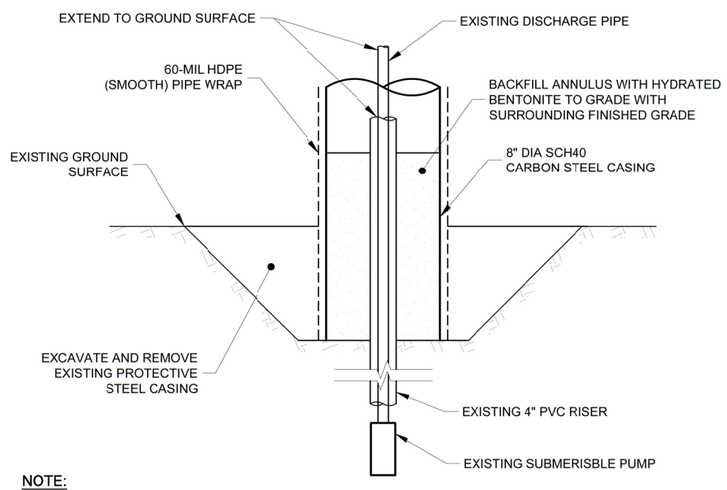

NOTE:

1. ADD ADDITIONAL SEGMENTS OF CARBON STEEL CASING, PVC RISER, AND HDPE PIPE WRAP AS NECESSARY TO BRING WELL TO FINAL GRADE WITH WASTE CONTAINMENT SURFACE.

36 / 4-91 WELL EXTENSION DETAIL
NOT TO SCALE

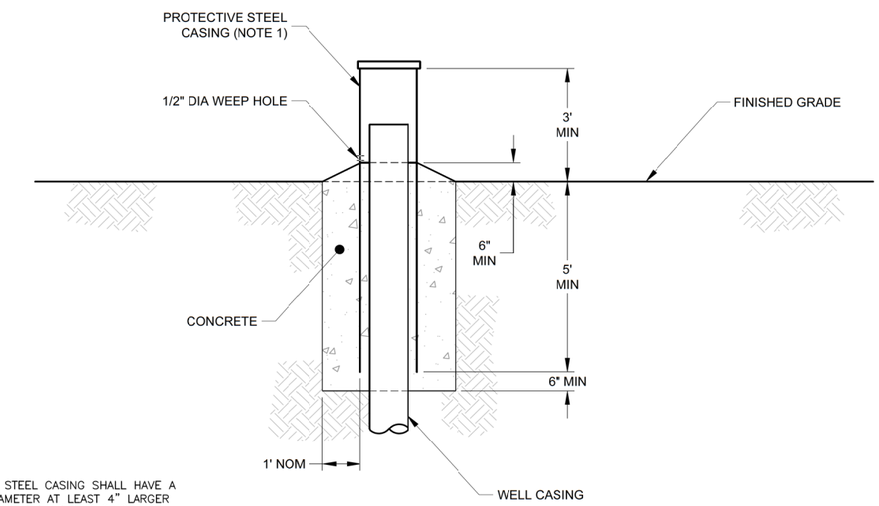

NOTE:

1. PROTECTIVE STEEL CASING SHALL HAVE A NOMINAL DIAMETER AT LEAST 4" LARGER THAN THAT OF THE WELL CASING AND A WATER-TIGHT LOCKING CAP.

37 / 4-91 MONITORING WELL SURFACE COMPLETION
NOT TO SCALE

ISSUE REV	DESCRIPTION	TECH	ENG	DATE
3	ISSUED FOR 100% DESIGN	KR	SM	06-15
2	ISSUED FOR 90% DESIGN	KR	SM	07-14

DISCLAIMER:
THIS DRAWING WAS DEVELOPED THROUGH THE APPLICATION OF PROFESSIONAL ENGINEERING SKILL AND PROPRIETARY METHODOLOGIES, PROCESSES AND KNOW HOW OF MWH AS AUTHOR ALL PURSUANT TO THE TERMS OF A CONTRACTUAL SCOPE OF WORK GOVERNING ITS PREPARATION. THIS DRAWING MAY NOT BE USED OR MODIFIED OTHER THAN IN STRICT ACCORDANCE WITH THE TERMS OF THE GOVERNING CONTRACT AND SCOPE OF WORK OR OTHERWISE ABSENT THE INVOLVEMENT AND CONSENT OF THE AUTHOR. ANY ALTERATION OR ADAPTATION OF THIS DRAWING SHALL BE CONSISTENT WITH THE AUTHOR'S CONTRACTUAL AND PROPRIETARY RIGHTS AND BE AT USER'S SOLE RISK AND WITHOUT ANY LIABILITY OR LEGAL RESPONSIBILITY OF MWH.

DESIGNED BY	S MCMANUS	06-15
DRAWN BY	K REED II	06-15
CHECKED BY	T KELLEY	06-15
APPROVED BY	C STRACHAN	06-15
PROJECT MANAGER	V DRAIN	06-15

NEWMONT

PROJECT LOCATION: WELLPINIT, WASHINGTON
PROJECT: MIDNITE MINE
TITLE: DETAILS AND TYPICAL SECTIONS (13 OF 20)

MWH

SHEET: 4-91
REVISION: 3
FILE NAME: 4-76
DATE: JUNE 2015

PW: \\AMERVPWNTO3.WWHGLOBAL.COM:AM_PROJECTS03\DOCUMENTS\FTC2_NEWMONT\MIDNIGHT MINE\RD-RA\013-SHEET SET\2015-01-01 BOOR\04_MINE EXCAV\4-76.dwg

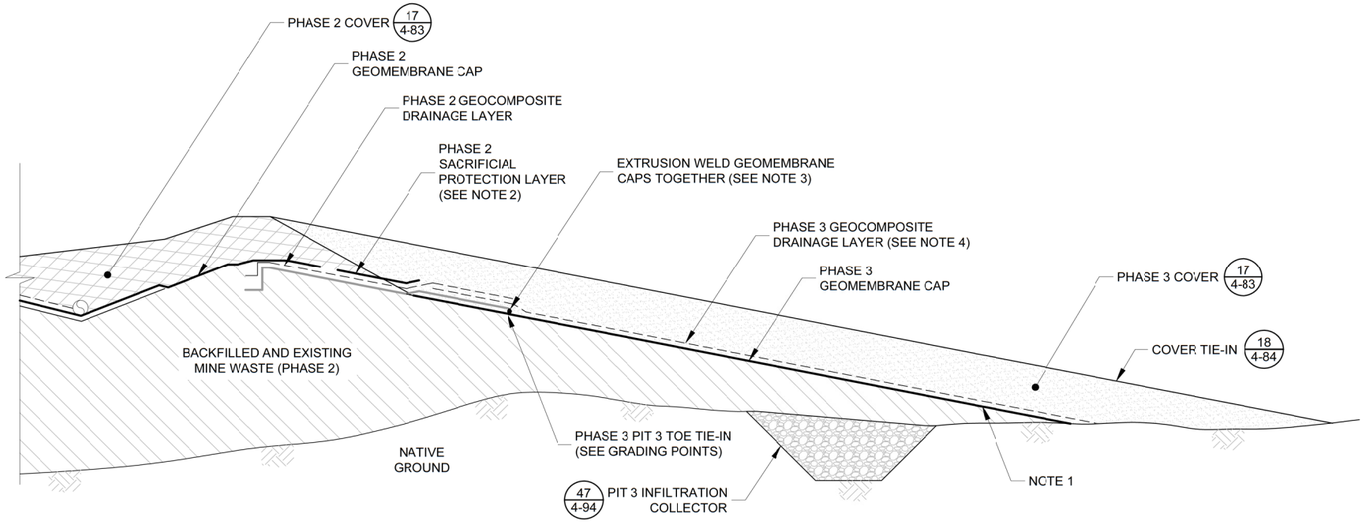

NOTES:

1. EXCAVATE EXISTING MINE WASTE TO DEVELOP FINAL SUBGRADE FOR COVER SYSTEM.
2. TRIM PHASE 2 SACRIFICIAL PROTECTION LAYER TO TOE OF PHASE 2 COVER PRIOR TO PLACEMENT OF PHASE 3 GEOMEMBRANE CAP, GEOCOMPOSITE DRAINAGE LAYER, AND COVER.
3. LIFT PHASE 2 GEOMEMBRANE CAP AND GEOCOMPOSITE DRAINAGE LAYER AND PLACE PHASE 3 GEOMEMBRANE CAP DIRECTLY AGAINST THE MINE WASTE, SHINGLING THE GEOMEMBRANE CAP IN A DOWN-SLOPE MANNER. GEOMEMBRANE CAPS SHALL HAVE A MINIMUM OVERLAP OF 5-FEET.
4. PLACE PHASE 3 GEOCOMPOSITE DRAINAGE LAYER ON TOP OF EXPOSED PHASE 2 GEOMEMBRANE AND BELOW EXPOSED PHASE 2 GEOCOMPOSITE DRAINAGE LAYER. PHASE 2 GEOCOMPOSITE DRAINAGE LAYER SHALL OVERLAP PHASE 3 GEOCOMPOSITE DRAINAGE LAYER BY A MINIMUM OF 5-FEET.

39/4-92 PIT 3 TOE TIE-IN TYPICAL SECTION - PHASE 3

NOT TO SCALE

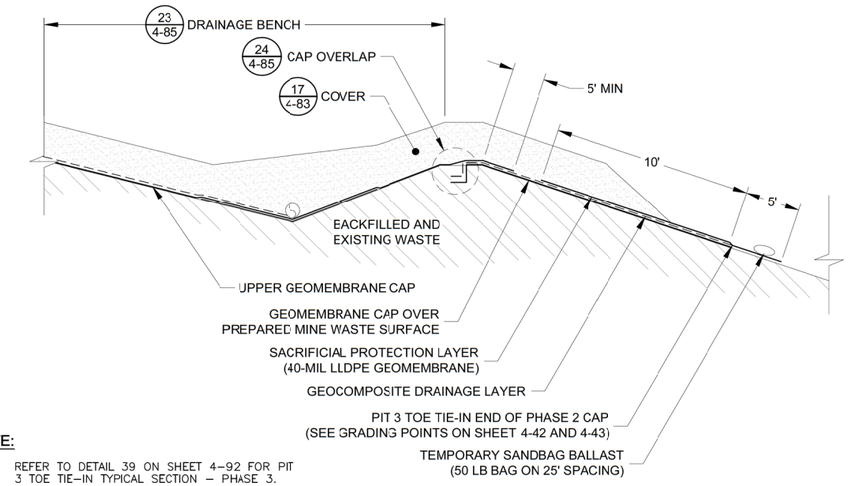

NOTE:

1. REFER TO DETAIL 39 ON SHEET 4-92 FOR PIT 3 TOE TIE-IN TYPICAL SECTION - PHASE 3.

38/4-92 PIT 3 TOE TIE-IN TYPICAL SECTION - PHASE 2

NOT TO SCALE

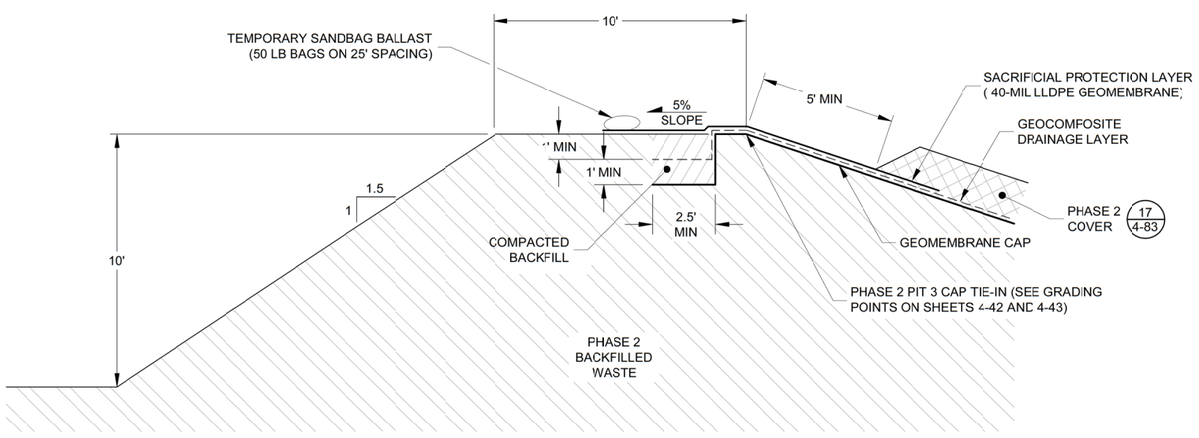

NOTE:

1. REFER TO DETAIL 41 ON SHEET 4-92 FOR PIT 3 CAP TIE-IN TYPICAL SECTION - PHASE 3.

40/4-92 PIT 3 CAP TIE-IN TYPICAL SECTION - PHASE 2

NOT TO SCALE

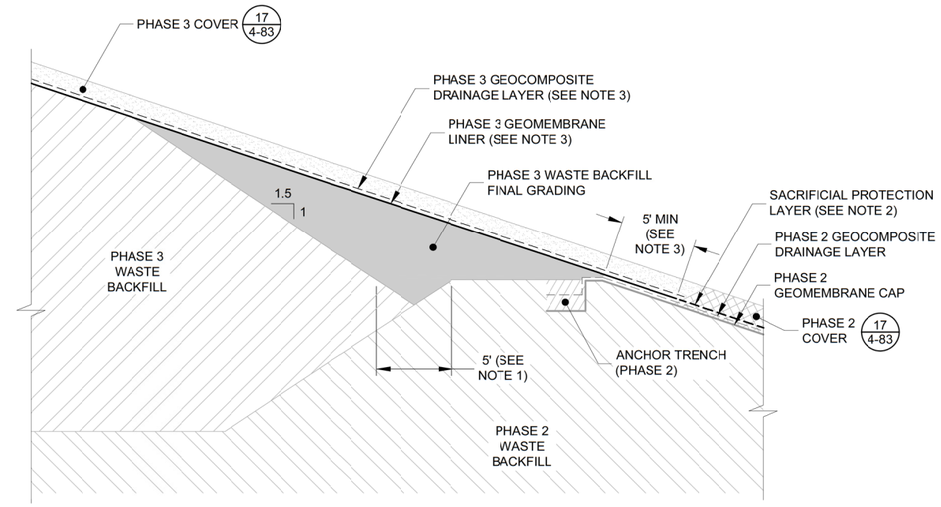

NOTES:

1. WHEN PLACING WASTE BACKFILL DURING PHASE 3, MAINTAIN 5-FT SETBACK FROM WASTE PLACED DURING PHASE 2 UNTIL FINAL GRADING OF THE WASTE BACKFILL SURFACE.
2. PHASE 3 GEOMEMBRANE CAP AND GEOCOMPOSITE DRAINAGE LAYER SHALL OVERLAP THE PHASE 2 GEOMEMBRANE CAP AND GEOCOMPOSITE DRAINAGE LAYER BY A MINIMUM OF 5-FT.

41/4-92 PIT 3 CAP TIE-IN TYPICAL SECTION - PHASE 3

NOT TO SCALE

ISSUE REV	DESCRIPTION	TECH	ENG	DATE
3	ISSUED FOR 100% DESIGN	KR	SM	06-15

DISCLAIMER:
THIS DRAWING WAS DEVELOPED THROUGH THE APPLICATION OF PROFESSIONAL ENGINEERING SKILL AND PROPRIETARY METHODOLOGIES, PROCESSES AND KNOW HOW OF MWH AS AUTHOR ALL PURSUANT TO THE TERMS OF A CONTRACTUAL SCOPE OF WORK GOVERNING ITS PREPARATION. THIS DRAWING MAY NOT BE USED OR MODIFIED OTHER THAN IN STRICT ACCORDANCE WITH THE TERMS OF THE GOVERNING CONTRACT AND SCOPE OF WORK OR OTHERWISE ABSENT THE INVOLVEMENT AND CONSENT OF THE AUTHOR. ANY ALTERATION OR ADAPTATION OF THIS DRAWING SHALL BE CONSISTENT WITH THE AUTHOR'S CONTRACTUAL AND PROPRIETARY RIGHTS AND BE AT USER'S SOLE RISK AND WITHOUT ANY LIABILITY OR LEGAL RESPONSIBILITY OF MWH.

DESIGNED BY	S MCMANUS	06-15
DRAWN BY	K REED	06-15
CHECKED BY	T KELLEY	06-15
APPROVED BY	C STRACHAN	06-15
PROJECT MANAGER	V DRAIN	06-15

NEWMONT

PROJECT LOCATION: WELLPINIT, WASHINGTON
PROJECT: MIDNITE MINE
TITLE: DETAILS AND TYPICAL SECTIONS (14 OF 20)

MWH

SHEET: 4-92
REVISION: 3
FILE NAME: 4-76
DATE: JUNE 2015

PW:\\AMER-PWINT03.MWHGLOBAL.COM:AM_PROJECTS03\DOCUMENTS\FTC2_NEWMONT\MIDNIGHT MINE\RD-RA\013-SHEET SET\2015-01-01 BOR\04_MINE EXCAV\4-76.dwg

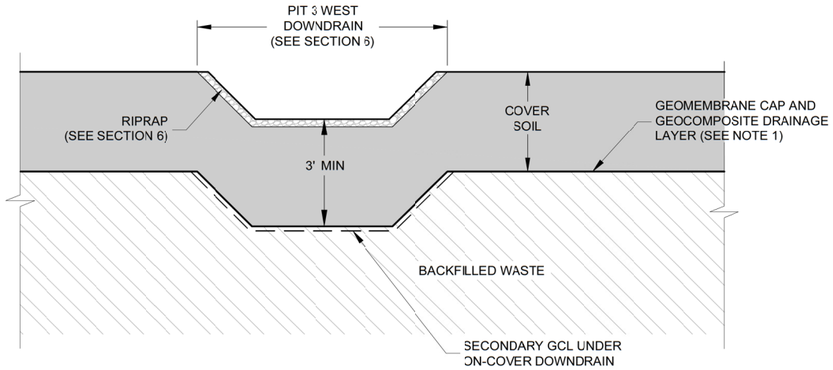

NOTES:

1. DO NOT PLACE GEOCOMPOSITE DRAINAGE LAYER WITHIN GEOCOMPOSITE DRAINAGE LAYER EXCLUSION ZONES (SEE SHEET 4–58).
2. GRADE ENDS OF ON–COVER DOWN DRAIN TO MATCH WITH OFF–COVER PORTIONS OF THE PIT 3 WEST DOWN–DRAIN (SEE SHEET 4–55, SECTION 6, AND DETAIL 43 ON SHEET 4–93).

42 / 4-93 ON-COVER DOWN-DRAIN TYPICAL SECTION

NOT TO SCALE

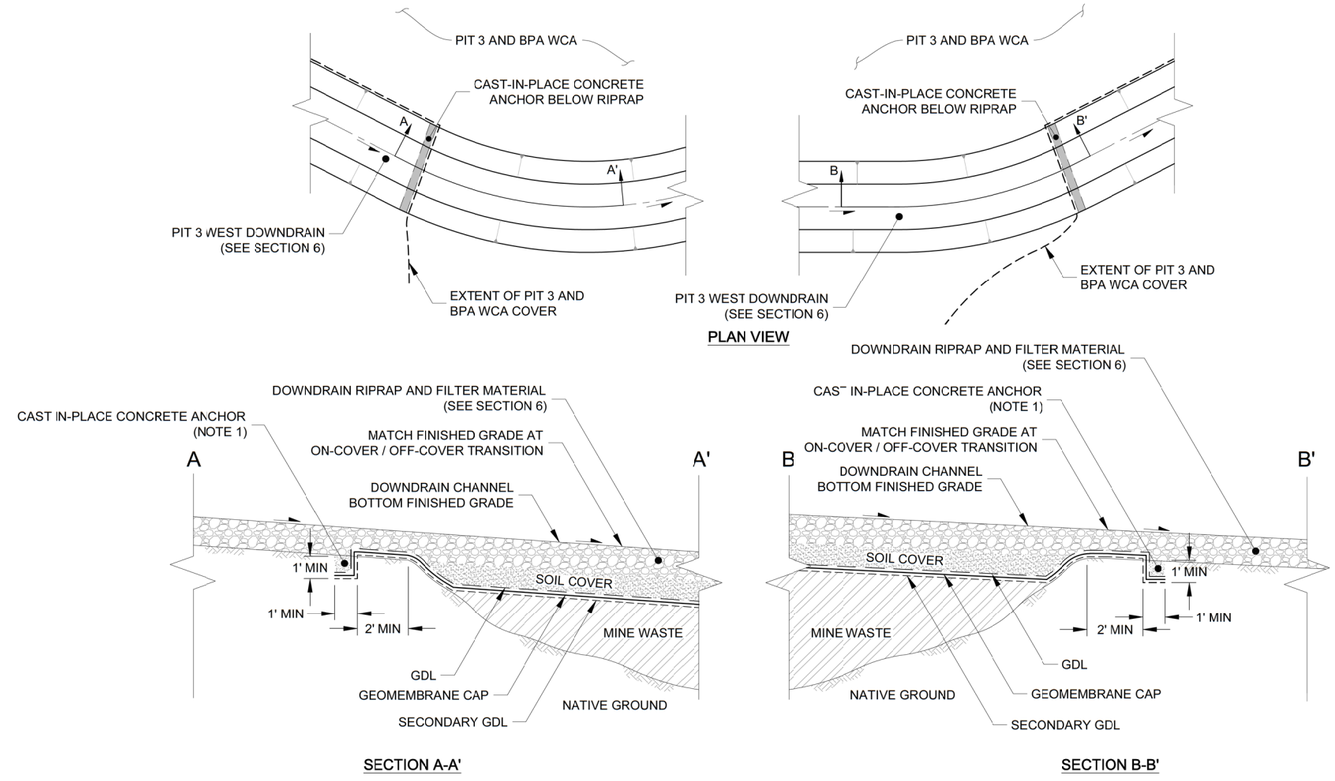

NOTE:

1. POUR CONCRETE DIRECTLY AGAINST GDL AFTER PLACING GDL, GEOMEMBRANE CAP AND SECONDARY GCL IN TRENCH BOTTOM.

43 / 4-93 OFF-COVER/ON-COVER DOWNDRAIN TRANSITION

NOT TO SCALE

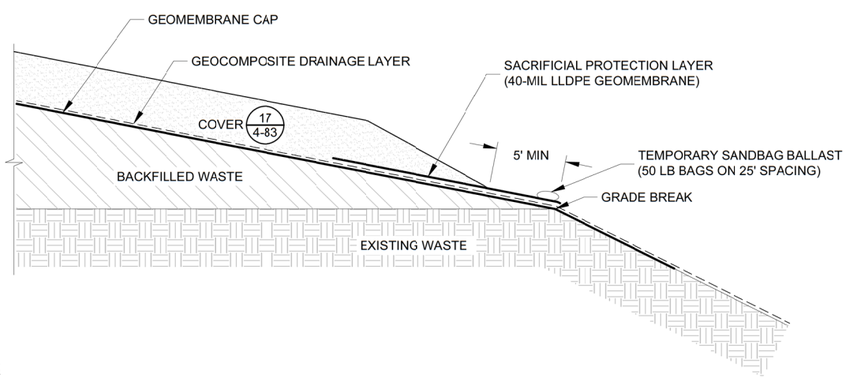

NOTE:

1. REFER TO DETAIL 45 ON SHEET 4–93 FOR AREA 5 TOE TIE–IN TYPICAL SECTION – PHASE 3.

44 / 4-93 AREA 5 TOE TIE-IN TYPICAL SECTION - PHASE 2

NOT TO SCALE

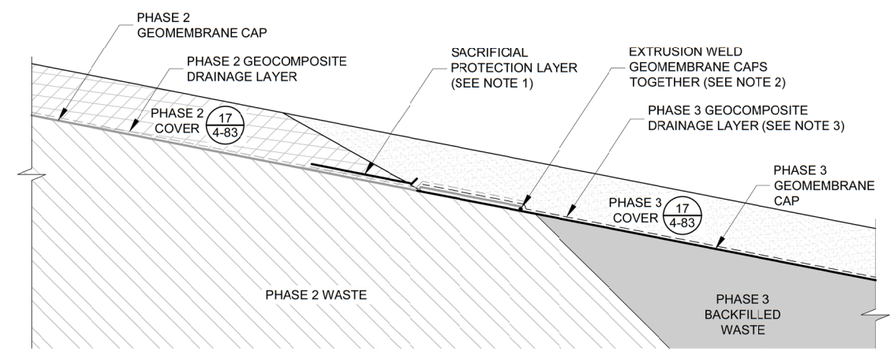

NOTES:

1. TRIM PHASE 2 SACRIFICIAL PROTECTION LAYER TO TOE OF PHASE 2 COVER PRIOR TO PLACEMENT OF PHASE 3 GEOMEMBRANE CAP, GEOCOMPOSITE DRAINAGE LAYER, AND COVER.
2. LIFT PHASE 2 GEOMEMBRANE CAP AND GEOCOMPOSITE DRAINAGE LAYER AND PLACE PHASE 3 GEOMEMBRANE CAP DIRECTLY AGAINST THE MINE WASTE, SHINGLING THE GEOMEMBRANE CAP IN A DOWN–SLOPE MANNER. GEOMEMBRANE CAPS SHALL HAVE A MINIMUM OVERLAP OF 5–FEET.
3. PLACE PHASE 3 GEOCOMPOSITE DRAINAGE LAYER ON TOP OF EXPOSED PHASE 2 GEOMEMBRANE AND BELOW EXPOSED PHASE 2 GEOCOMPOSITE DRAINAGE LAYER. PHASE 2 GEOCOMPOSITE DRAINAGE LAYER SHALL OVERLAP PHASE 3 GEOCOMPOSITE DRAINAGE LAYER BY A MINIMUM OF 5–FEET.

45 / 4-93 AREA 5 TOE TIE-IN TYPICAL SECTION - PHASE 3

NOT TO SCALE

ISSUE REV	DESCRIPTION	TECH	ENG	DATE
3	ISSUED FOR 100% CESIGN	KR	SM	06–15

DISCLAIMER:
THIS DRAWING WAS DEVELOPED THROUGH THE APPLICATION OF PROFESSIONAL ENGINEERING SKILL AND PROPRIETARY METHODOLOGIES, PROCESSES AND KNOW-HOW OF MWH AS AUTHOR ALL PURSUANT TO THE TERMS OF A CONTRACTUAL SCOPE OF WORK GOVERNING ITS PREPARATION. THIS DRAWING MAY NOT BE USED OR MODIFIED OTHER THAN IN STRICT ACCORDANCE WITH THE TERMS OF THE GOVERNING CONTRACT AND SCOPE OF WORK OR OTHERWISE ABSENT THE INVOLVEMENT AND CONSENT OF THE AUTHOR. ANY ALTERATION OR ADAPTATION OF THIS DRAWING SHALL BE CONSISTENT WITH THE AUTHOR'S CONTRACTUAL AND PROPRIETARY RIGHTS AND BE AT USER'S SOLE RISK AND WITHOUT ANY LIABILITY OR LEGAL RESPONSIBILITY OF MWH.

DESIGNED BY	S MCMANUS	06–15
DRAWN BY	K REED	06–15
CHECKED BY	T KELLEY	06–15
APPROVED BY	C STRACHAN	06–15
PROJECT MANAGER	V DRAIN	06–15

NEWMONT

PROJECT LOCATION: WELLPINIT, WASHINGTON

PROJECT: MIDNITE MINE

TITLE: DETAILS AND TYPICAL SECTIONS (15 OF 20)

MWH

SHEET: 4-93 | REVISION: 3

FILE NAME: 4-76 | DATE: JUNE 2015

PW: \\AMENVPWINTO3.MWHGLOBAL.COM:AM_PROJECTS03\DOCUMENTS\FTC2_NEWMONT\MIDNIGHT MINE\RD-RA\013-SHEET SET\2015-01-01 BOOR\04_MINE EXCAV\4-76.dwg

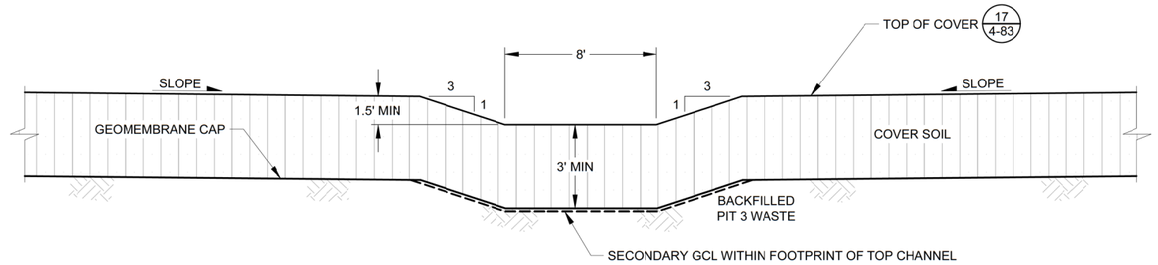

46/4-94 PIT 3 TOP CHANNEL TYPICAL SECTION
NOT TO SCALE

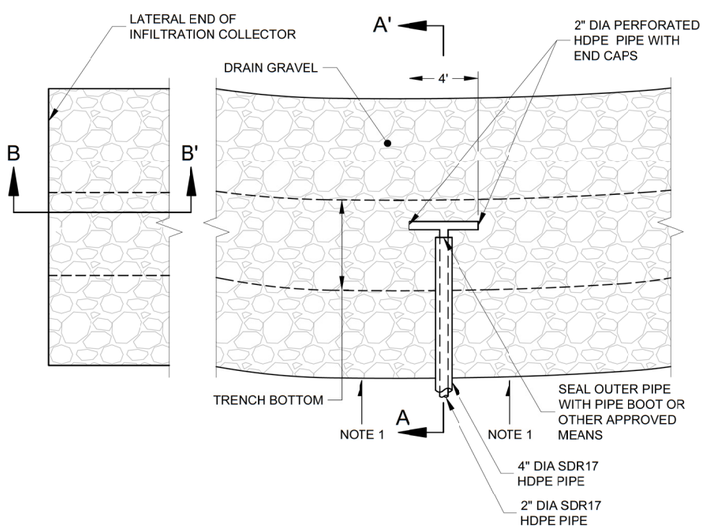

PLAN VIEW

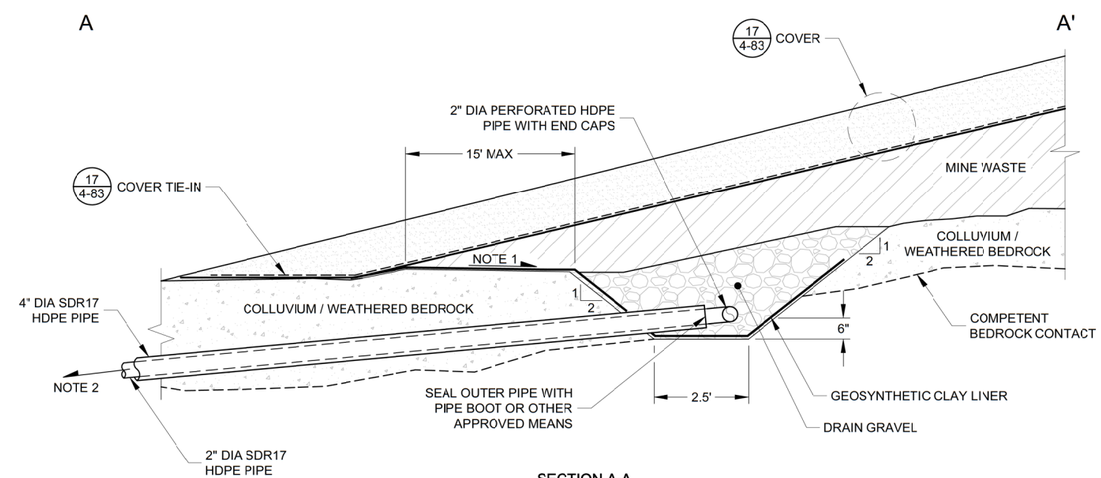

SECTION A-A

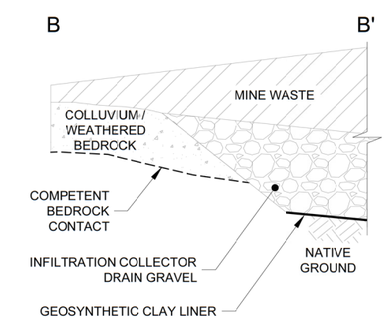

SECTION B-B'

NOTES:

1. GRADE NATIVE GROUND SURFACE TO SLOPE TOWARD INFILTRATION COLLECTOR.
2. REFER TO SECTION 10 FOR INFORMATION REGARDING DISCHARGE PIPELINE.

47/4-94 PIT 3 INFILTRATION COLLECTOR DETAIL
NOT TO SCALE

ISSUE REV	DESCRIPTION	TECH	ENG	DATE
3	ISSUED FOR 100% DESIGN	KR	SM	06-15

DISCLAIMER:
THIS DRAWING WAS DEVELOPED THROUGH THE APPLICATION OF PROFESSIONAL ENGINEERING SKILL AND PROPRIETARY METHODOLOGIES, PROCESSES AND KNOW HOW OF MWH AS AUTHOR ALL PURSUANT TO THE TERMS OF A CONTRACTUAL SCOPE OF WORK GOVERNING ITS PREPARATION. THIS DRAWING MAY NOT BE USED OR MODIFIED OTHER THAN IN STRICT ACCORDANCE WITH THE TERMS OF THE GOVERNING CONTRACT AND SCOPE OF WORK OR OTHERWISE ABSENT THE INVOLVEMENT AND CONSENT OF THE AUTHOR. ANY ALTERATION OR ADAPTATION OF THIS DRAWING SHALL BE CONSISTENT WITH THE AUTHOR'S CONTRACTUAL AND PROPRIETARY RIGHTS AND BE AT USER'S SOLE RISK AND WITHOUT ANY LIABILITY OR LEGAL RESPONSIBILITY OF MWH.

DESIGNED BY	S MCMANUS	06-15
DRAWN BY	K REED	06-15
CHECKED BY	T KELLEY	06-15
APPROVED BY	C STRACHAN	06-15
PROJECT MANAGER	V DRAIN	06-15

NEWMONT

PROJECT LOCATION: WELLPINIT, WASHINGTON
PROJECT: MIDNITE MINE
TITLE: DETAILS AND TYPICAL SECTIONS (16 OF 20)

MWH

SHEET: 4-94
REVISION: 3
FILE NAME: 4-76
DATE: JUNE 2015

PW: \\AMERVPWINT03.MWHGLOBAL.COM:AM_PROJECTS03\DOCUMENTS\FTC2_NEWMONT\MIDNIGHT MINE\RD-RA\013-SHEET SET\2015-01-01 BOOR\04_MINE EXCAV\4-76.dwg

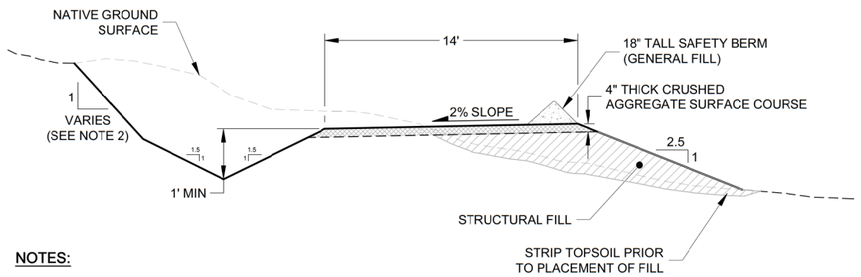

NOTES:

1. DISCONTINUE SAFETY BERM AT ROLLING DIPS TO ALLOW DISCHARGE OF SURFACE WATER.
2. CUT SLOPE WILL VARY BASED ON PROPERTIES OF CUT SLOPE MATERIALS. SLOPES WILL BE 1:1 IN ROCK AND 2:1 IN SOIL AS DETERMINED BY THE ENGINEER.

48 / 4-95 SITE MAINTENANCE ROAD TYPICAL SECTION 1

NOT TO SCALE

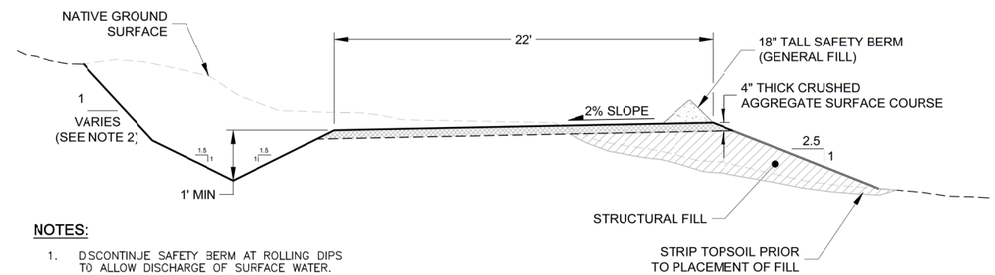

NOTES:

1. DISCONTINUE SAFETY BERM AT ROLLING DIPS TO ALLOW DISCHARGE OF SURFACE WATER.
2. CUT SLOPE WILL VARY BASED ON PROPERTIES OF CUT SLOPE MATERIALS. SLOPES WILL BE 1:1 IN ROCK AND 2:1 IN SOIL AS DETERMINED BY THE ENGINEER.

49 / 4-95 SITE MAINTENANCE ROAD TYPICAL SECTION 2

NOT TO SCALE

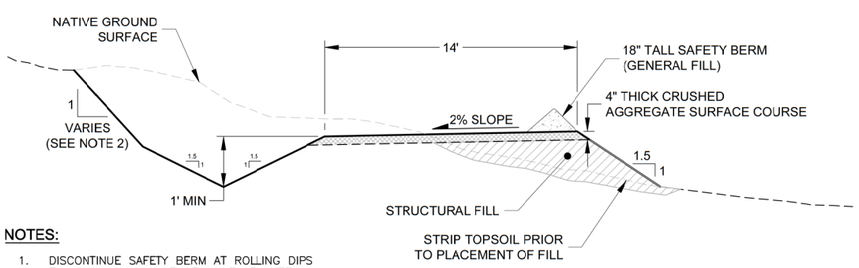

NOTES:

1. DISCONTINUE SAFETY BERM AT ROLLING DIPS TO ALLOW DISCHARGE OF SURFACE WATER.
2. CUT SLOPE WILL VARY BASED ON PROPERTIES OF CUT SLOPE MATERIALS. SLOPES WILL BE 1:1 IN ROCK AND 2:1 IN SOIL AS DETERMINED BY THE ENGINEER.

50 / 4-95 SITE MAINTENANCE ROAD TYPICAL SECTION 3

NOT TO SCALE

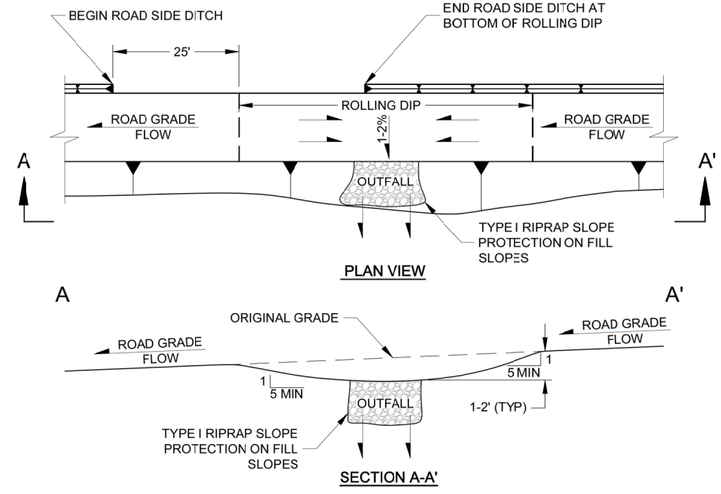

NOTE:

1. REPLACE RIPRAP OUTFALL WITH LEAD-OFF DITCH (SEE DETAIL 52 ON SHEET 4-96) IF ROLLING DIP IS LOWER THAN SURROUNDING GROUND SURFACE.

51 / 4-95 ROLLING DIP DETAIL

NOT TO SCALE

ISSUE REV	DESCRIPTION	TECH	ENG	DATE
3	ISSUED FOR 100% DESIGN	KR	SM	06-15

DISCLAIMER:
THIS DRAWING WAS DEVELOPED THROUGH THE APPLICATION OF PROFESSIONAL ENGINEERING SKILL AND PROPRIETARY METHODOLOGIES, PROCESSES AND KNOW-HOW OF MWH AS AUTHOR ALL PURSUANT TO THE TERMS OF A CONTRACTUAL SCOPE OF WORK GOVERNING ITS PREPARATION. THIS DRAWING MAY NOT BE USED OR MODIFIED OTHER THAN IN STRICT ACCORDANCE WITH THE TERMS OF THE GOVERNING CONTRACT AND SCOPE OF WORK OR OTHERWISE ABSENT THE INVOLVEMENT AND CONSENT OF THE AUTHOR. ANY ALTERATION OR ADAPTATION OF THIS DRAWING SHALL BE CONSISTENT WITH THE AUTHOR'S CONTRACTUAL AND PROPRIETARY RIGHTS AND BE AT USER'S SOLE RISK AND WITHOUT ANY LIABILITY OR LEGAL RESPONSIBILITY OF MWH.

DESIGNED BY	S MCMANUS	06-15
DRAWN BY	K REED	06-15
CHECKED BY	T KELLEY	06-15
APPROVED BY	C STRACHAN	06-15
PROJECT MANAGER	V DRAIN	06-15

NEWMONT

PROJECT LOCATION: WELLPINIT, WASHINGTON

PROJECT: MIDNITE MINE

TITLE: DETAILS AND TYPICAL SECTIONS (17 OF 20)

MWH

SHEET: 4-95 | REVISION: 3

FILE NAME: 4-76 | DATE: JUNE 2015

PW: \\AMERVPWINTO3.MWHGLOBAL.COM:AM_PROJECTS03\DOCUMENTS\FTC2_NEWMONT\MIDNIGHT MINE\RD-RA\013-SHEET SET\2015-01-01 BODR\04_MINE EXCAV\4-76.dwg

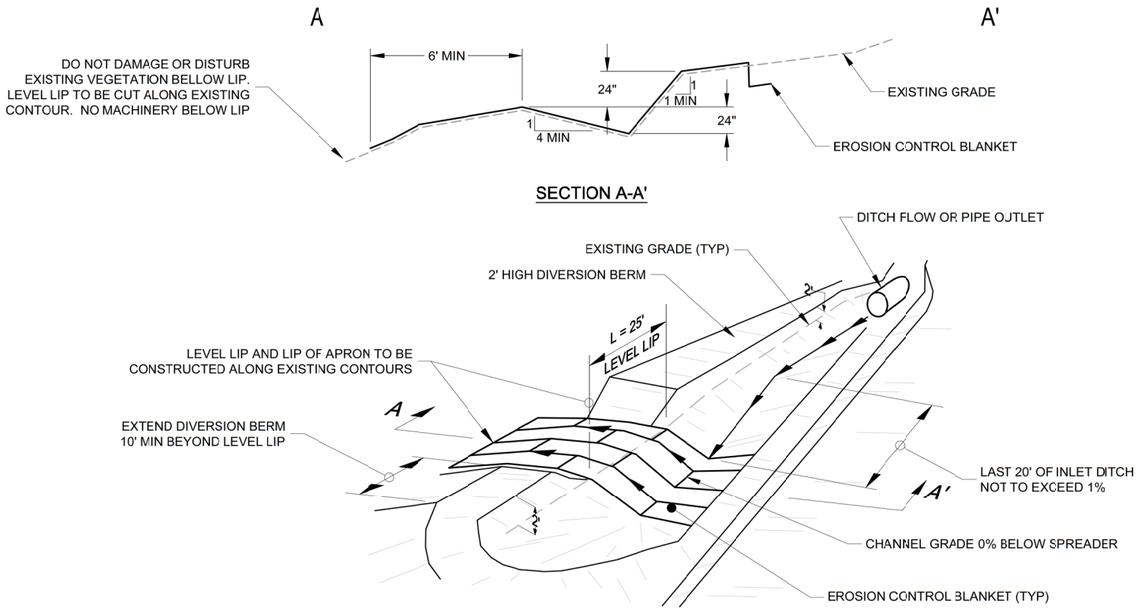

52 / 4-96 LEAD-OFF DITCH DETAIL
NOT TO SCALE

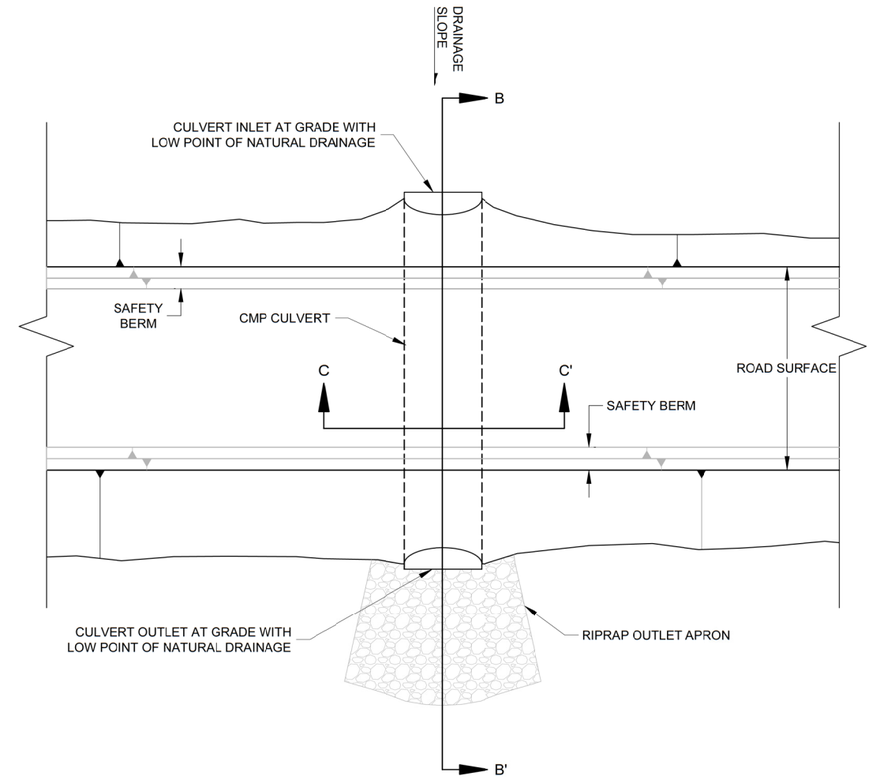

53 / 4-96 CULVERT DETAIL
NOT TO SCALE

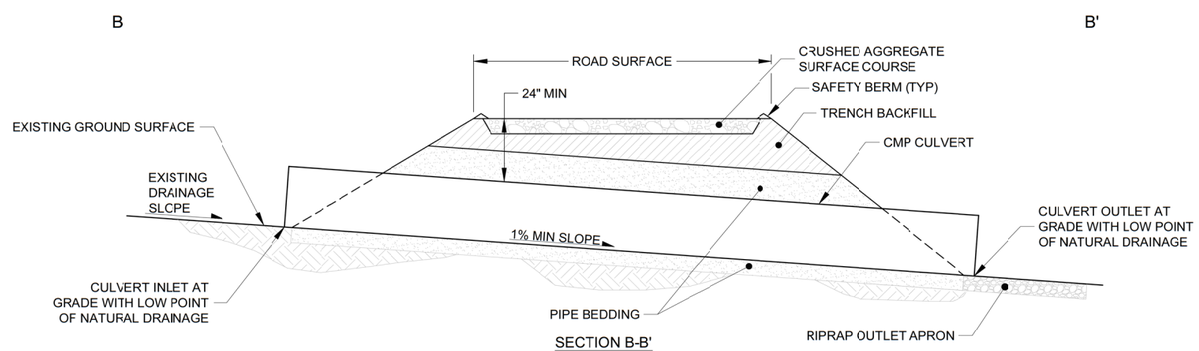

SECTION B-B'

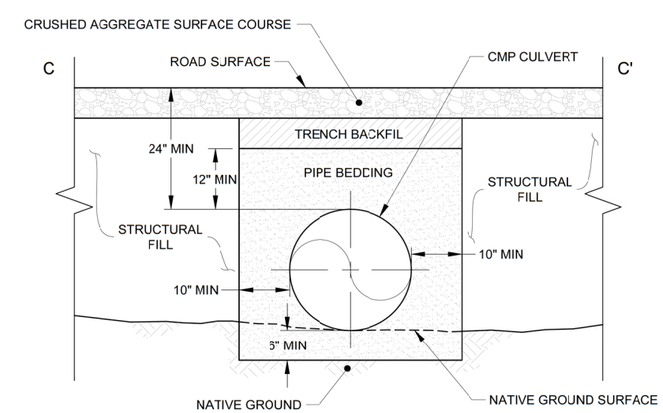

SECTION C-C'

REV	DESCRIPTION	TECH	ENG	DATE
3	ISSUED FOR 100% DESIGN	KR	SM	06–15

DISCLAIMER:
THIS DRAWING WAS DEVELOPED THROUGH THE APPLICATION OF PROFESSIONAL ENGINEERING SKILL AND PROPRIETARY METHODOLOGIES, PROCESSES AND KNOW HOW OF MWH AS AUTHOR ALL PURSUANT TO THE TERMS OF A CONTRACTUAL SCOPE OF WORK GOVERNING ITS PREPARATION. THIS DRAWING MAY NOT BE USED OR MODIFIED OTHER THAN IN STRICT ACCORDANCE WITH THE TERMS OF THE GOVERNING CONTRACT AND SCOPE OF WORK OR OTHERWISE ABSENT THE INVOLVEMENT AND CONSENT OF THE AUTHOR. ANY ALTERATION OR ADAPTATION OF THIS DRAWING SHALL BE CONSISTENT WITH THE AUTHOR'S CONTRACTUAL AND PROPRIETARY RIGHTS AND BE AT USER'S SOLE RISK AND WITHOUT ANY LIABILITY OR LEGAL RESPONSIBILITY OF MWH.

DESIGNED BY	S MCMANUS	06–15
DRAWN BY	K REED	06–15
CHECKED BY	T KELLEY	06–15
APPROVED BY	C STRACHAN	06–15
PROJECT MANAGER	V DRAIN	06–15

NEWMONT

PROJECT LOCATION: WELLPINIT, WASHINGTON
PROJECT: MIDNITE MINE
TITLE: DETAILS AND TYPICAL SECTIONS (18 OF 20)

MWH

SHEET: 4-96
REVISION: 3
FILE NAME: 4-76
DATE: JUNE 2015

PW: \\AMERVPWINT03.MWHGLOBAL.COM:AM_PROJECTS03\DOCUMENTS\FTC2_NEWMONT\MIDNIGHT MINE\RD-RA\013-SHEET SET\2015-01-01 BODR\04_MINE EXCAV\4-76.dwg

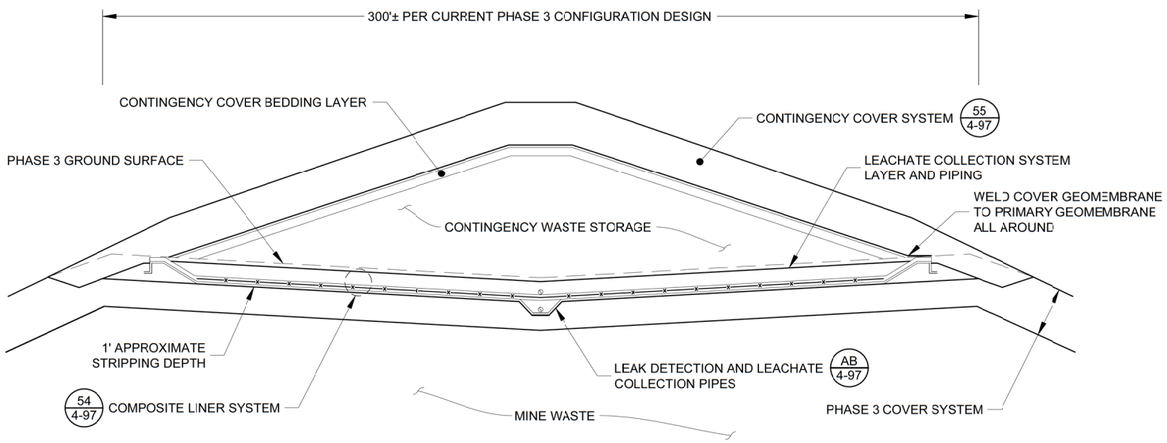

Z 4-97 CONTINGENCY STORAGE AREA CONCEPTUAL DESIGN SECTION
NOT TO SCALE

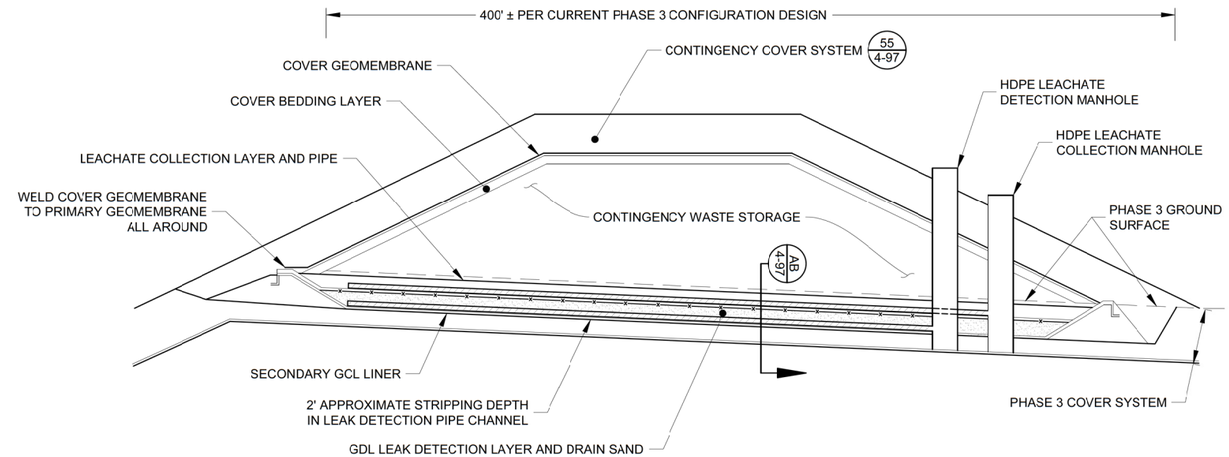

AA 4-97 CONTINGENCY STORAGE AREA CONCEPTUAL DESIGN PROFILE ALONG LEAK DETECTION TRENCH
NOT TO SCALE

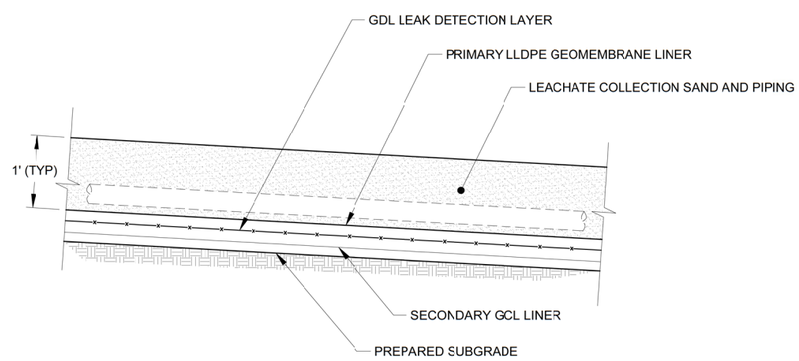

54 4-97 CONTINGENCY WASTE STORAGE COMPOSITE LINER SYSTEM
NOT TO SCALE

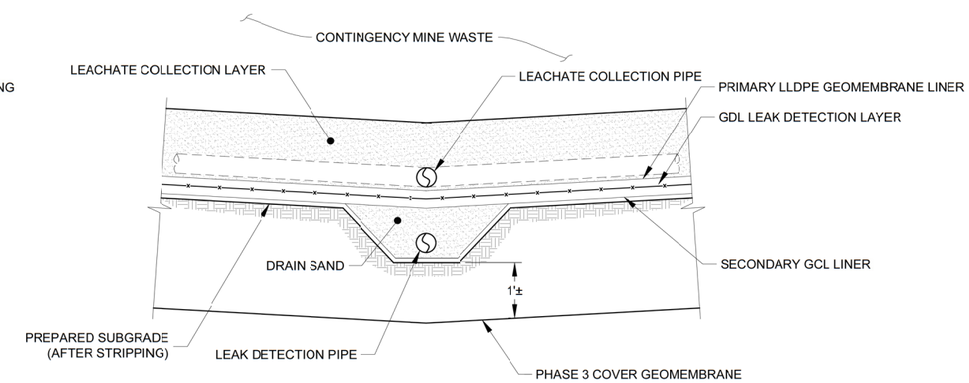

AB 4-97 LEAK DETECTION AND LEACHATE COLLECTION PIPES
NOT TO SCALE

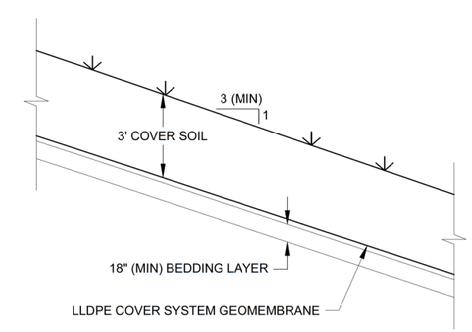

55 4-97 CONTIGENCY COVER SYSTEM
NOT TO SCALE

REV	DESCRIPTION	TECH	ENG	DATE
3	ISSUED FOR 100% CESIGN	KR	SM	06–15

DISCLAIMER:
THIS DRAWING WAS DEVELOPED THROUGH THE APPLICATION OF PROFESSIONAL ENGINEERING SKILL AND PROPRIETARY METHODOLOGIES, PROCESSES AND KNOW-HOW OF MWH AS AUTHOR ALL PURSUANT TO THE TERMS OF A CONTRACTUAL SCOPE OF WORK GOVERNING ITS PREPARATION. THIS DRAWING MAY NOT BE USED OR MODIFIED OTHER THAN IN STRICT ACCORDANCE WITH THE TERMS OF THE GOVERNING CONTRACT AND SCOPE OF WORK OR OTHERWISE ABSENT THE INVOLVEMENT AND CONSENT OF THE AUTHOR. ANY ALTERATION OR ADAPTATION OF THIS DRAWING SHALL BE CONSISTENT WITH THE AUTHOR'S CONTRACTUAL AND PROPRIETARY RIGHTS AND BE AT USER'S SOLE RISK AND WITHOUT ANY LIABILITY OR LEGAL RESPONSIBILITY OF MWH.

DESIGNED BY	S MCMANUS	06–15
DRAWN BY	K REED	06–15
CHECKED BY	T KELLEY	06–15
APPROVED BY	C STRACHAN	06–15
PROJECT MANAGER	V DRAIN	06–15

NEWMONT

PROJECT LOCATION: WELLPINIT, WASHINGTON
PROJECT: MIDNITE MINE
TITLE: DETAILS AND TYPICAL SECTIONS (19 OF 20)

MWH

SHEET: 4-97
REVISION: 3
FILE NAME: 4-76
DATE: JUNE 2015

PW: \\AMENVPWINTO3.MWHGLOBAL.COM:AM_PROJECTS03\DOCUMENTS\FTC2_NEWMONT\MIDNIGHT MINE\RD-RA\013-SHEET SET\2015-01-01 BODR\04_MINE EXCAV\4-76.dwg

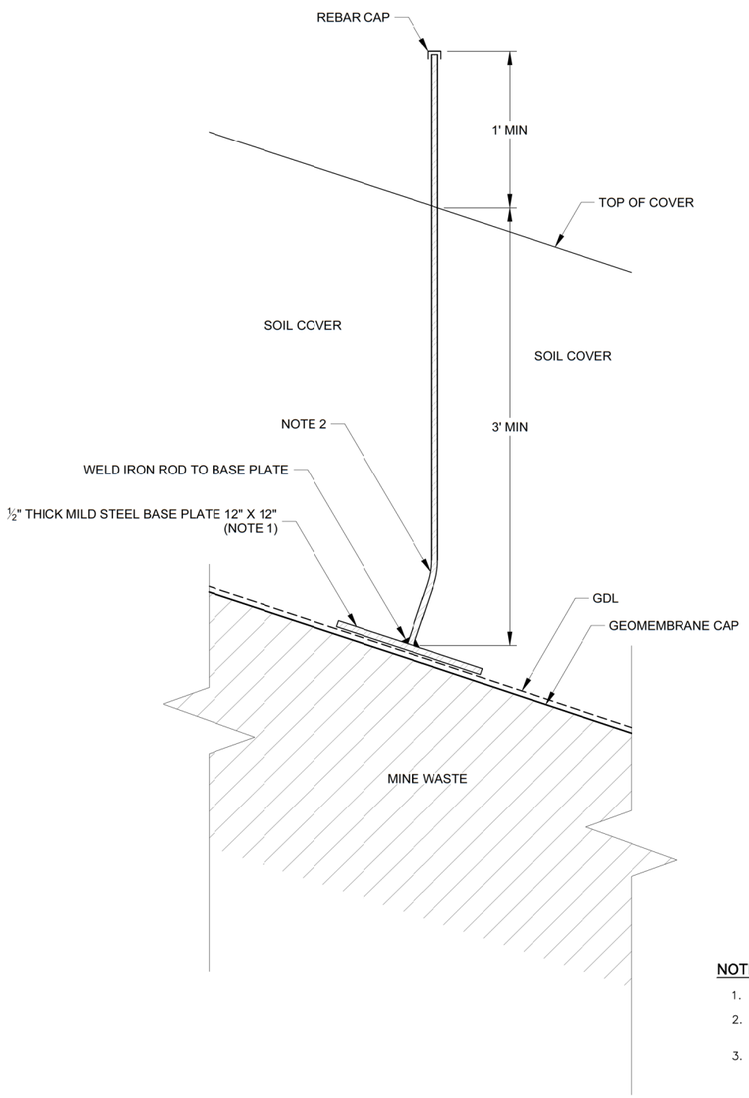

NOTES:

1. STEEL BASE PLATE WILL BE SEATED DIRECTLY ON TOP OF GDL.
2. BEND IRON ROD AS NECESSARY FOR PORTION OF IRON ROD ABOVE COVER TO BE PLUMB.
3. SETTLEMENT PLATE LOCATIONS WILL BE FLAGGED AND PROTECTED FROM CONSTRUCTION VEHICLES AND EQUIPMENT.

56 / 4-98 SETTLEMENT MONITORING MONUMENT DETAIL

NOT TO SCALE

ISSUE REV	DESCRIPTION	TECH	ENG	DATE
3	ISSUED FOR 100% DESIGN	KR	SM	06–15

DISCLAIMER:
THIS DRAWING WAS DEVELOPED THROUGH THE APPLICATION OF PROFESSIONAL ENGINEERING SKILL AND PROPRIETARY METHODOLOGIES, PROCESSES AND KNOW HOW OF MWH AS AUTHOR ALL PURSUANT TO THE TERMS OF A CONTRACTUAL SCOPE OF WORK GOVERNING ITS PREPARATION. THIS DRAWING MAY NOT BE USED OR MODIFIED OTHER THAN IN STRICT ACCORDANCE WITH THE TERMS OF THE GOVERNING CONTRACT AND SCOPE OF WORK OR OTHERWISE ABSENT THE INVOLVEMENT AND CONSENT OF THE AUTHOR. ANY ALTERATION OR ADAPTATION OF THIS DRAWING SHALL BE CONSISTENT WITH THE AUTHOR'S CONTRACTUAL AND PROPRIETARY RIGHTS AND BE AT USER'S SOLE RISK AND WITHOUT ANY LIABILITY OR LEGAL RESPONSIBILITY OF MWH.

DESIGNED BY	S MCMANUS	06–15
DRAWN BY	K REED	06–15
CHECKED BY	T KELLEY	06–15
APPROVED BY	C STRACHAN	06–15
PROJECT MANAGER	V DRAIN	06–15

NEWMONT

PROJECT LOCATION: WELLPINIT, WASHINGTON

PROJECT: MIDNITE MINE

TITLE: DETAILS AND TYPICAL SECTIONS (20 OF 20)

MWH

SHEET: 4-98 | REVISION: 3

FILE NAME: 4-76 | DATE: JUNE 2015

PW:\\AMERVPWNT03.MWHGLOBAL.COM:AM_PROJECTS03\DOCUMENTS\FTC2_NEWMONT\MIDNIGHT MINE\RD-RA\013-SHEET SET\2015-01-01 BOR\04_MINE EXCAV\4-76.dwg