Midnite Mine Superfund Site
100 Percent Design

Appendix P – Operation, Maintenance and Monitoring Plan

June 2015

Prepared for:

Dawn Mining Company
PO Box 250
Ford, Washington 990413

and

Newmont USA Limited
6363 South Fiddler's Green Circle
Greenwood Village, Colorado 80111

Prepared By:

MWH Americas, Inc.
2890 E. Cottonwood Parkway, Suite 300
Salt Lake City, UT 84121

TABLE OF CONTENTS

P1.0 INTRODUCTION 1

P1.1 Modifications to the Plan 1

P1.2 Document Organization 3

P2.0 EXISTING SITE FACILITIES 4

P3.0 MONITORING AND STANDARDS 5

P4.0 SUBMITTAL PROCEDURES AND REPORTING 5

P5.0 DOCUMENTATION, AVAILABILITY OF INFORMATION, AND RECORD RETENTION ... 6

P5.1 Central File 6

P5.2 Document Management 7

P5.3 Document Retention 7

P6.0 SITE SAFETY 8

P7.0 REFERENCES 8

ATTACHMENTS

Attachment P-1: Operation, Maintenance and Monitoring (OM&M) Plan for the Midnite Mine Water Collection System and Water Treatment Plant for the Phase I RD/RA: Interim Water Management for the Midnite Mine

Attachment P-2: Security Fence Alignment Plan and Monthly Fence Inspection Form

Attachment P-3: Inspection and Maintenance of Site Access Roads and Culverts

Attachment P-4: Routine Inspection and Maintenance for the Surface Water Diversions

Attachment P-5: Routine Inspection and Maintenance for the Alluvial Groundwater Collection System

Attachment P-6: Routine Inspection and Maintenance for Existing Ponds and Tanks

Attachment P-7: Routine Inspection and Maintenance for the Filter Press

Attachment P-8: Routine Inspection and Maintenance for Water Treatment Plant Influent and Effluent Pipelines (Future Construction)

Attachment P-9: Routine Inspection and Maintenance for Dewatering, Underdrain, and Alluvial Groundwater Control Systems (Future Construction)

Attachment P-10: Routine Inspection and Maintenance of Cover Systems (Future Construction)

Attachment P-11: Routine Inspection and Maintenance for Temporary Water Management Ponds (Future Construction)

LIST OF ACRONYMS

ATV	all-terrain vehicle
CD	Consent Decree
DMC	Dawn Mining Company, LLC
EPA	U.S. Environmental Protection Agency
ECN	Engineering Change Notice
Newmont	Newmont USA Limited
O&M	Operations and Maintenance
OM&M	Operations, Maintenance and Monitoring
QAPP	Quality Assurance Project Plan
RA	Remedial Action
RAWP	Remedial Action Work Plan
RD	Remedial Design
ROD	Record of Decision
SDC	Significant Design Changes
Site	Midnite Mine Superfund Site
SMP	Site-wide Monitoring Plan
SOP	Standard Operating Procedure
State	Washington State
Tribe	Spokane Tribe of Indians
WTP	water treatment plant

P1.0 INTRODUCTION

This Operation, Maintenance and Monitoring Plan (OM&M Plan) has been prepared in accordance with the *Midnite Mine Superfund Site Record of Decision* (ROD; United States Environmental Protection Agency [EPA], 2006) and a Remedial Design/Remedial Action (RD/RA) Consent Decree (CD) lodged by the United States District Court on January 17, 2012.

The existing interim water management system at the Midnite Mine Superfund Site (Site) comprises seep and surface water collection systems (including pits/surface water impoundments), conveyance systems, a water treatment plant (WTP), WTP effluent pipeline system, and WTP residual management facilities. Operation, maintenance and monitoring (OM&M) of the existing system is performed in accordance with the *Operation, Maintenance and Monitoring Plan for the Midnite Mine Water Collection System and Water Treatment Plant for the Phase I RD/RA: Interim Water Management for the Midnite Mine* (Tetra Tech, 2010). A copy of the OM&M Plan for the Phase I RD/RA is included in Attachment 1.

In order to accommodate the water management system as it evolves during the phased RA construction, the OM&M Plan will be a dynamic document and will be updated and revised as necessary, which likely will be yearly. This will be necessary because components of the pre-RA water management system will change over the course of the multi-year RA construction. For example, the mine pits (i.e., Pit 3 and Pit 4) that currently store mine-affected water will be taken off line during the backfill operation as part of the RA and new temporary impoundments and associated conveyance systems will be constructed. This process will be repeated until the entire site is remediated and the final water capture, transport, treatment, and discharge system is established.

This OM&M Plan will be updated annually during the RA by redline/strikeout revisions to add and delete information as the water management system and other components of the RD are constructed throughout the RA. This OM&M Manual will be revised to incorporate the redline/strikeout revisions when significant changes to the water management system have occurred. At the conclusion of the RA, a Remedy Operations and Maintenance (O&M) Plan will be prepared to describe post-RA O&M activities.

P1.1 MODIFICATIONS TO THE PLAN

In the event that changes are made to the WTP (existing or new), related facilities or other remedial action components, modifications to this OM&M plan in many cases will be necessary.

Modifications to this plan that are minor changes to OM&M procedures intended to improve the operation and maintenance of the facilities can be made without prior United States EPA approval. Modifications will be documented in this OM&M plan and transmitted to the EPA and Tribe within 15 business days after the modification. A submittal letter will be transmitted with the OM&M modification describing the need for the modification and the modification. Examples of minor OM&M changes include, but are not limited to, construction of temporary facilities during maintenance on permanent structures (e.g. bypass pipelines), changing pump or valve types (if the pumps or valves serve a similar function), excavation and repair of plugged pipelines (as long as the pipeline is restored to its original design configuration and intent), upgrade of computer programs and/or upgrade of programmable controller(s), upgrade/improvements to communication systems, and other corrective actions covered by the existing OM&M plan.

Significant Design Changes (SDC) to the existing or new WTP and related facilities must be approved by EPA prior to commencing work. SDCs are defined as substantial changes to the existing designs and/or work plans that require revisions to design calculations, significant modifications to existing drawings to be clearly represented, or significant modifications to existing materials and/or structures. Examples include:

- Installation of flow meters and flumes
- Addition of the sludge press to the existing WTP
- Modifications to structures that alter the design capacity or design criteria
- Modifications to re-route flows or change storage/treatment capacity
- Modifications to disposal procedures (e.g. WTP sludge disposal)
- Modifications that require construction effort, and/or are not covered by the existing OM&M plan.

When Dawn Mining Company LLC and Newmont USA Limited (DMC/ Newmont) is considering a proposed SDC, DMC/Newmont will submit to EPA information on the change including descriptions of the change, reasons for the change, drawings (if necessary to show the change), technical specifications, and an implementation schedule. Any SDCs will be documented with a draft Engineering Change Notice (ECN), which will be submitted 15 days prior to the anticipated date for construction. Draft ECNs will be prepared and submitted to EPA for review. If EPA determines that the ECN does not cover a SDC, comments (if any) will be provided to

DMC/Newmont on the ECN. DMC/Newmont will incorporate the EPA comments and issue a final ECN. If EPA determines that the ECN covers a SDN, comments (if any) will be provided on the draft ECN to DMC/Newmont/DMC/Newmont will incorporate the EPA comments (if any) and submit a final ECN to EPA for signature prior to implementing the changes noted in the ECN.

When DMC/Newmont is considering a change to existing facilities, and there is a question as to whether the change is a design change or an OM&M change, DMC/Newmont shall notify EPA of the proposed change at least 15 days prior to making the change to request a determination as to whether the change is a design change or an OM&M change except under emergency conditions. Under emergency conditions, maximum possible notice shall be provided to EPA.

Updates to this existing plan will be submitted to EPA within 30 days of final installation or SDCs as defined above.

P1.2 DOCUMENT ORGANIZATION

This overall plan includes information for all site facilities that require operations, monitoring or inspection, and maintenance. Each site facility is included as an individual attachment to this document as follows:

- The most comprehensive OM&M plan is for the existing WTP and is included as Attachment 1.
- The installation of the existing security fence was completed on August 5, 2009, and the existing Security Fence Alignment Plan is included as Figure 1 in Attachment 2 along with the monthly fence inspection form. Other permanent fences will be installed as the RA progresses and will need to be inspected and maintained during and following the RA. These fences include a permanent wildlife-friendly rail fence around the capped area and a chain-link fence around the WTP and storage ponds associated with the WTP.
- Attachment 3 includes the information for the inspection and maintenance of the existing site access road and culverts.
- Attachment 4 addresses the routine inspection and maintenance for the existing Surface Water Diversions.

- Attachment 5 includes the inspection and maintenance activities associated with the existing Alluvial Groundwater Collection System in the three drainages leading from the Site.
- Attachment 6 discusses the inspection and maintenance for existing Ponds and Tanks.
- Attachment 7 includes the information for the operations and maintenance activities associated with the Filter Press that was installed in the fall of 2013.
- Attachment 8 includes the anticipated inspection and maintenance activities associated with Water Treatment Plant Influent and Effluent Pipelines (FUTURE CONSTRUCTION)
- Attachment 9 includes the anticipated inspection and maintenance activities associated with Dewatering Systems in Pit 3 and Pit 4 (FUTURE CONSTRUCTION)
- Attachment 10 includes the anticipated inspection and maintenance activities associated with Cover Systems (FUTURE CONSTRUCTION)
- Attachment 11 includes the anticipated inspection and maintenance activities for the temporary water management ponds to be installed during RA construction (FUTURE CONSTRUCTION).

Copies of completed inspection forms will be kept initially at the DMC/Newmont Millsite office or during the RA in the contractor's main office located on-site. Additional attachments or revisions to this existing OM&M plan will be incorporated into this document as major components are installed.

P2.0 EXISTING SITE FACILITIES

A seep collection system and pump back system to collect water and direct it back to a pollution control pond and then to Pit 3 was built in 1986, and in 1988 the Midnite Mine WTP was constructed to treat the water in the open pit, which began operation in 1992.

The Midnite Mine Site Standard Operating Procedures (MM-SOPs) (Tetra Tech, 2009) shall be used to ensure that activities affecting quality meet all regulatory requirements. A copy of the Midnite Mine SOPs are kept onsite at the WTP and at the Mill Site Office. A master schedule of activities to be performed and the frequency for each is included as Appendix A to the WTP OM&M (Attachment 1).

Additional facilities including the security fence, access roads and culverts, and surface water diversions requiring periodic inspection and maintenance under the Interim Mechanisms and in

the future during the RA are included in this report. The inspection and maintenance for the access roads, culverts, and diversion channels are required quarterly or following a major storm event. Security fence inspection and maintenance is required monthly.

As RA components are installed, this section will be revised to include a description of the new facility.

P3.0 MONITORING AND STANDARDS

The Standard Operating Procedures (SOPs), which are incorporated as part of the Site-Wide Monitoring Plan (SMP), define procedures for sample collection. The SMP, which includes a Quality Assurance Project Plan (QAPP), defines the proposed locations, methods, frequency of sampling, and reporting for surface water, groundwater, and sediment monitoring at the mine site. These documents should be used in conjunction with this OM&M plan to ensure that the monitoring data is properly collected and evaluated.

Following completion of the RA, revegetated areas will be inspected each summer season until the sites achieve 60 percent live vegetation cover and 70 percent total cover that includes live cover and litter. Vegetation surveys will be conducted during each growing season until revegetation success criteria are met. Observed rills and gullies will be repaired as soon as practicable, and the area reseeded and stabilized with mulch or riprap.

In addition to the above surveys, noxious weed surveys will be conducted annually. Should noxious weeds (as defined by the Spokane Tribe of Indians) be documented at the site, control procedures will be taken to eliminate the weed following a weed control program approved by the Tribal Department of Natural Resources. Details regarding the vegetation and noxious weed surveys will be included in the Remedial Action Work Plan (RAWP).

Access to the facilities addressed by this OM&M Plan will be either by vehicle on the permanent site access roads or on foot. The use of all-terrain vehicles (ATVs) off of the permanent access roads will not be allowed.

P4.0 SUBMITTAL PROCEDURES AND REPORTING

All documents required to be submitted pursuant to the CD shall be submitted electronically and hand delivered or sent by overnight mail to the following persons or to such other persons as the parties hereafter may designate in writing:

1. Documents submitted to EPA shall include one electronic copy and two hard copies sent to:

   Karen Keeley
   Remedial Project Manager
   U.S. Environmental Protection Agency
   Region 10 (ECL-113)
   1200 Sixth Avenue, Suite 900
   Seattle, Washington 98101

2. Documents submitted to the Spokane Tribe shall include one electronic copy and one hard copy sent to:

   Spokane Tribe of Indians
   Natural Resources Department
   Attn: Randy Connolly, Superfund Coordinator
   PO Box 480
   Wellpinit, Washington 99040

   (For express mail):
   Spokane Tribe of Indians
   Natural Resources Department
   Attn: Randy Connolly, Superfund Coordinator
   6290-B Ford-Wellpinit Road
   Wellpinit, Washington 99040

In the event of a significant change in conditions or emergency circumstances relating to public health or welfare or the environment related to Work under the CD, DMC/Newmont shall provide notification according to Section XXVI of the Consent Decree.

P5.0 DOCUMENTATION, AVAILABILITY OF INFORMATION, AND RECORD RETENTION

P5.1 CENTRAL FILE

DMC/Newmont shall establish a document control system with the following objectives:

1. Creation of a central file containing all documents pertaining to Work under the CD.

2. Organization of the documents to facilitate retrieval of information.
3. Segregation of documents containing information which DMC/Newmont claims is privileged and confidential.
4. Establishment of procedures to ensure that all documents are routinely placed in the central file.

In addition, DMC/Newmont shall prepare and periodically update an inventory of all documents contained in the central file. The inventory shall contain for each document (1) the document date, (2) the author(s), (3) the recipient(s), and (4) the document title or subject. The DMC/Newmont shall submit the document inventory or an update to EPA upon written request.

P5.2 DOCUMENT MANAGEMENT

The operator shall retain records of all monitoring information, including all calibration and maintenance records, corrective action reports, copies of reports, and data generated. Adequate records will be maintained to document the process by which project objectives are met. Records kept by the operator will be legible, identifiable, and retrievable and will be protected to the extent possible against loss, damage or deterioration. Access to project files will be restricted to project and other authorized personnel only.

The inventory of all required documents contained in the central filing system will be periodically updated. In addition, copies of non-privileged documents will be made available to the EPA and the State upon request. The inventory for each document will contain the following information:

- Document date
- Authors
- Recipients
- Document title or subject

P5.3 DOCUMENT RETENTION

DMC/Newmont shall provide to EPA upon request, copies of all non-privileged documents and information within their possession and/or control or that of their contractors or agents relating to activities at the Site or to the implementation of the CD including but not limited to; sampling, analysis, chain-of-custody records, manifests, trucking logs, receipts, reports, sample traffic routing, correspondence, and other documents or information related to the Work.

DMC/Newmont shall preserve for a minimum of ten (10) years after the remedial action has been completed, all records and documents in their possession or control, including the documents in the possession or control of their contractors and agents on and after the Effective Date of the Certificate of Completion that relate in any manner to the Site. DMC/Newmont shall also preserve and shall instruct their contractors and agents to preserve all documents, records and information of whatever kind, nature or description relating to the performance of the Work. At the end of this ten-year period, DMC/Newmont shall notify the EPA at least ninety (90) days prior to the destruction of any such record, documents, or information and, upon request of the EPA, DMC/Newmont shall deliver all such documents, records, and information to the EPA.

P6.0 SITE SAFETY

At the start of the RA, the following documents will be used to define the health and safety requirements:

- Health and Safety Plan for the Midnite Mine Superfund Site (WME, 2013) – describes the health and safety requirements for operation of the WTP.
- Midnite Mine Superfund Site Remedial Action Health and Safety Plan (MWH, 2015) – describes the health and safety requirements for the RA construction activities.

P7.0 REFERENCES

MWH Americas, Inc. (MWH), 2015. Midnite Mine Superfund Site - Remedial Action Health and Safety Plan. Prepared for Dawn Mining Company, LLC and Newmont USA Limited. July.

Tetra Tech, Inc. (Tetra Tech), 2009. Standard Operating Procedures for the Phase I RD/RA: Interim Water Management for the Midnite Mine. Prepared for Dawn Mining Company and Newmont USA Limited. May 5.

Tetra Tech, Inc. (Tetra Tech), 2010. Operation, Maintenance and Monitoring (OM&M) Plan for the Midnite Mine Water Collection System and Water Treatment Plant for the Phase I RD/RA: Interim Water Management for the Midnite Mine.

U.S. Environmental Protection Agency (EPA), 2006. Record of Decision, Midnite Mine Superfund Site, Spokane Indian Reservation, Washington. September.

Worthington Miller Environmental (WME), 2013. Health and Safety Plan for the Midnite Mine Superfund Site. Prepared for Dawn Mining Company, LLC and Newmont USA Limited. June 4.

Attachment P-1

Operation, Maintenance and Monitoring (OM&M) Plan for the Midnite Mine Water Collection System and Water Treatment Plant for the Phase I RD/RA: Interim Water Management for the Midnite Mine

In order to manage the size of this 100% design report, this attachment only is included in the electronic submittal. This attachment describes current Site O&M activities, and has not been revised for this submittal.

Note: This OM&M Plan addresses inspection, monitoring, and maintenance activities for the existing water treatment plant and will be used until the existing water treatment facility is taken offline during the implementation of the remedial action. This attachment will be replaced in its entirety when the new water treatment plant is constructed and brought on-line.

Operation, Maintenance and Monitoring (OM&M) Plan for the Midnite Mine Water Collection System and Water Treatment Plant for the Phase I RD/RA: Interim Water Management for the Midnite Mine

Revision 2

Prepared for:

Dawn Mining Company

P.O. Box 250
Ford, Washington 99013

and

Newmont USA Limited

6363 S. Fiddler's Green Circle
Greenwood Village, Colorado 80111

Prepared by:

Tetra Tech

3801 Automation Way, Suite 100
Fort Collins, Colorado 80525
(970) 223-9600
Fax (970) 223-7171
Tetra Tech Project No. 114-181850

May 4, 2010

DISTRIBUTION LIST

OM&M Plan Recipient Name	Organization
Ellen Hale	U.S. Environmental Protection Agency
Randy Connolly	Spokane Tribe of Indians
John Mudge	Dawn Mining Company/Newmont USA Ltd.
Robert Nelson	Dawn Mining Company
Bobby Nelson	Dawn Mining Company
Don Plummer	Dawn Mining Company
Lou Miller	Miller Geotechnical Consulting
Bruce Marshall	Tetra Tech
Field Supervisor (to be determined)	To be determined
Jennifer Hudson	Tetra Tech

TABLE OF CONTENTS

1.0 INTRODUCTION 1
1.1 Operation and Managerial Responsibility 1
1.1.1 Operational Personnel's Responsibility 1
1.1.2 Treatment Facility Management Responsibility 1
1.2 Type of Treatment and Treatment Requirements 2
1.2.1 Type of Treatment 2
1.2.2 Treatment Requirements 2
2.0 DESCRIPTION, OPERATION AND CONTROL OF WATER COLLECTION SYSTEM AND WATER TREATMENT FACILITIES 3
2.1 Overview of Seep and Surface Water Collection System and Treatment Plant Operation 5
2.1.1 Seep and Surface Water Collection System 5
2.1.2 Specific Treatment Plant Operations and Flow Diagrams 5
2.1.3 Process Operating and Sizing Criteria 6
2.2 Seep and Surface Water Collection System 6
2.2.1 Collection and Conveyance System for Outfall 001 7
2.2.2 Collection and Conveyance System for Outfall 002 9
2.2.3 Collection and Conveyance System for Outfall 003 10
2.2.4 Collection and Conveyance System for Outfall 004 12
2.2.5 Collection and Conveyance System Pollution Control Pond 14
2.2.6 Emergency Response and Pump Watch Procedure 16
2.3 Pumping Stations, Plant Conveyance Pipeline and Water Treatment Plant Influent System 19
2.3.1 Pumping Station Type 19
2.3.2 Pumping Station Classification 19
2.3.3 Pipeline Types and Sizes 19
2.3.4 Water Treatment Plant Influent System 20
2.4 Primary Treatment System 22
2.4.1 Neutralization and Precipitation 22
2.4.2 Barium Chloride System 26
2.4.3 Lime Slurry System 28
2.4.4 Flocculant Addition System 31
2.4.5 Primary Solid Liquid Separation 33
2.4.6 Effluent Filtration 36
2.4.7 Clarifier Overflow pH Adjustment 39
2.4.8 Clarifier Overflow Anti-Scalant Addition 40
2.5 Plant Effluent System 41
2.5.1 Control 41
2.5.2 Major Components 42
2.5.3 Laboratory or Onsite Testing Controls 42
2.5.4 Start-Up 43

2.5.5 Normal Operation 43
2.5.6 Alternate Operation 43
2.5.7 Emergency Operations and Failsafe Features 43
2.6 Sludge Handling Facilities 44
2.6.1 Sludge Dewatering 44
2.7 Sludge Transport and Final Disposal 46
3.0 TROUBLESHOOTING AND COMMON OPERATING PROBLEMS FOR WATER TREATMENT FACILITIES 47
3.1 Seep and Surface Water Collection System 49
3.1.1 Common Operating Problems for Outfall 001 49
3.1.2 Common Operating Problems for Outfall 002 50
3.1.3 Common Operating Problems for Outfall 003 50
3.1.4 Common Operating Problems for Outfall 004 52
3.1.5 Common Operating Problems for the Pollution Control Pond 53
3.2 Common Operating Problems for the Raw Water Supply System 54
3.3 Common Operating Problems Neutralization and Precipitation 55
3.4 Common Operating Problems for the Lime Slurry System 57
3.5 Common Operating Problems for the Flocculant Addition System 59
3.6 Common Operating Problems for the Primary Solid Liquid Separation System 60
3.7 Common Operating Problems for the Clarifier Overflow pH Adjustment System 64
3.8 Common Operating Problems for the Clarifier Anti-Scalant System 65
3.9 Common Operating Problems for the Effluent Filtration System 65
3.10 Common Operating Problems for the Plant Effluent System 67
3.11 Common Operating Problems for the Sludge Dewatering System 68
4.0 ESTIMATE OF DURATION OF OPERATION AND MAINTENANCE ACTIVITIES 69
5.0 PERSONNEL 70
5.1 Manpower Requirements/Staff 70
5.2 Qualifications 70
5.3 Hiring Problems, Personnel Disputes, and Complaints 71
6.0 WTP MONITORING AND STANDARDS 72
6.1 Purpose 72
6.2 Sampling and Monitoring 72
7.0 RECORDS AND REPORTING 76
7.1 Purpose 76
7.2 Daily Operating Log 76
7.3 Water Collection System Monitoring Log 76
7.4 Monthly Reports to the US EPA 77
7.5 Operating Costs 78
7.6 Personnel 78
7.7 Emergency Conditions Record and Reporting 78

7.7.1 Emergency Conditions Reporting 78
7.7.2 Emergency Conditions Reporting 79
7.8 Submittal Procedures and Reporting 80
7.9 Documentation, Availability of Information, and Record Retention 81
7.9.1 Central File 81
7.9.2 Document Management 81
7.9.3 Document Retention 81
8.0 ANNUAL OPERATION AND MAINTENANCE COSTS 83
8.1 Annual Operation and Maintenance Costs 83
8.1.1 Labor 83
8.1.2 Utilities 83
8.1.3 Chemicals 83
8.1.4 Supplies and Maintenance 84
8.1.5 Contract Services 84
8.2 Operating Entity 84
9.0 MAINTENANCE 85
9.1 General 85
9.2 Spare Parts 85
9.3 Maintenance Personnel 86
9.4 Housekeeping 86
9.5 Special Tools and Equipment 87
9.6 Major Equipment Information 87
9.6.1 General 87
9.6.2 Spare Parts 88
9.7 Lubrication 89
9.8 Contract Maintenance 91
10.0 EMERGENCY OPERATING AND RESPONSE PROGRAM 92
10.1 Vulnerability Analysis 92
10.2 Methods to Reduce Vulnerability 94
10.3 Emergency Equipment Inventory 94
10.4 Preserving Treatment System Records 95
10.5 Industrial Waste Inventory/Monitoring System 95
10.6 Coordinating Instructions for Local Police and Fire Department 95
10.7 Emergency Response Contact Information 95
11.0 SITE SAFETY 97
12.0 UTILITIES 98
12.1 Electricity 98
12.2 Telephone 98
12.3 Propane 98
12.4 Portable Toilet Service 98
13.0 REFERENCES 99

LIST OF TABLES

Table 1-1. Water Treatment Plant Influent Raw Water Characteristics and Design Basis 2
Table 2-1. Water Treatment Facility Section References 4
Table 2-2. Western Drainage Response Time..... 17
Table 3-1. Troubleshooting Reference 47
Table 6-1. Onsite Monitoring and Testing Program 73
Table 6-2. Effluent Self-Monitoring Requirements 75
Table 6-3. Interim Limits for Discharge to Surface Water*..... 75
Table 8-1. Estimated Annual Operation and Maintenance Costs 83
Table 9-1. Major Equipment for the Midnite Mine Water Treatment Facility 88
Table 9-2. Equipment Lubrication Requirements..... 90

LIST OF FIGURES

Figure 1. Water Collection Pump Stations
Figure 2. Water Management Pumping System Schematic
Figure 3. Conceptual Process Flow Diagram Legend
Figure 4. Conceptual Process Flow Diagram
Figure 5. Conceptual Process Flow Diagram
Figure 6. Plant Layout
Figure 7. Western Drainage Check Sheet
Figure 8. Personal Data Sheet
Figure 9. Midnite Mine Site Location Map

LIST OF APPENDICES

Appendix A: Midnite Mine Master Schedule
Appendix B: Residual Management Plan
Appendix C: General Operating and Equipment Criteria
Appendix D: Daily Operating Log
Appendix E: Manufacturer's Operations and Maintenance Manuals
Appendix F: Midnite Mine Spill Prevention, Control and Countermeasures Plan

1.0 INTRODUCTION

This OM&M Plan is the treatment facility personnel's primary reference book. It describes the treatment of water and sludge handling at the WTP. The Table of Contents can be used to locate information quickly. The Table of Contents has all of the OM&M Plan sections listed along with the corresponding page on which the information can be found. Sufficient subsections are listed in each section to permit easy identification of the topics addressed in the Plan.

1.1 Operation and Managerial Responsibility

The scope of responsibility for both operations personnel and management is outlined below to ensure efficient and effective operation of the treatment facility.

1.1.1 Operational Personnel's Responsibility

- Know proper operational procedures.
- Operate the treatment system effectively.
- Keep continuously informed of the best operating and maintenance practices.
- Maintain accurate and neat operational and maintenance records.
- Use sound judgment in the expenditure of operating funds.
- Keep management advised of potential major problems in operation and maintenance of system.
- Assist supervisors in preparing an adequate budget.
- Be aware of safety hazards connected with the treatment facility.
- Be prepared to discuss plant operation with plant visitors.
- Know expected efficiencies of unit operations and processes in the treatment system and how to monitor these units.

1.1.2 Treatment Facility Management Responsibility

- Maintain efficient plant operation and maintenance.
- Maintain adequate treatment facility operational and management records.
- Establish staff requirements, prepare job descriptions, develop organization charts, and assign personnel.
- Provide good working conditions, relevant training, safety equipment, and proper tools for the operational personnel.
- Motivate personnel to achieve maximum efficiency of operation.
- Make employees aware of importance of proper plant performance.
- Make periodic inspections of the treatment system to discuss mutual problems with the operations personnel and to observe operational practices.
- Create an atmosphere that will make operations personnel feel that they can bring problems to management's attention.
- Maintain good public relations.

- Prepare budgets and reports.
- Plan for future facility needs.
- Update standard operating procedures.

1.2 Type of Treatment and Treatment Requirements

1.2.1 Type of Treatment

The plant is designed to treat a nominal flow of 500 gallons per minute (gpm) of waters collected in seep capture and pumpback systems from Pits 3 and 4. The composition of the influent is shown in Table 1-1.

Table 1-1. Water Treatment Plant Influent Raw Water Characteristics and Design Basis

Pollutant or Contaminant	Plant Feed Concentration[a]
Uranium (total), mg/L	14.1
Radium-226 (total), pCi/L	26.1
Manganese (total), mg/L	62.6
Copper (total), mg/L	0.15
Cadmium (total), mg/L	0.041
Zinc (total), mg/L	2.83
TSS, mg/L	<10

a. Concentration averages for 2007 sampling events

The type of treatment system for this facility includes physical and chemical treatment processes comprised of the following major processes:

- Chemical precipitation of metals
- Flocculation
- Clarification
- Chemical pH adjustment
- Filtration
- Sludge dewatering and disposal

1.2.2 Treatment Requirements

As specified in the SOW, the WTP effluent will comply with the interim limits for discharge to surface water as defined in Table 12-2 of the Record of Decision (ROD) and presented in Table 6-3 of this plan. The performance standards and sampling requirements are discussed in Section 6.0. The WTP sludge has historically been disposed of in tailings disposal area No. 4 (TDA-4) at the DMC Millsite. Currently and in the future, the sludge will be disposed in accordance with the selected alternative from the Residual Management Plan included in Appendix B (Miller Geotechnical Consultants, 2009) as discussed in Section 2.8.

2.0 DESCRIPTION, OPERATION AND CONTROL OF WATER COLLECTION SYSTEM AND WATER TREATMENT FACILITIES

The water collection and water treatment systems are described in this section and include overall process descriptions, process controls, major components, start-up procedures, and normal, alternate, and emergency operations. Table 2-1 presents a summary of the sections where each individual process is described. The systems which are described in the section include the following:

- Seep and Surface Water Collection System
- Raw Water System
- Neutralization and Precipitation System
- Barium Chloride System
- Lime Slurry System
- Flocculant Addition System
- Primary Solid Liquid Separation
- Clarifier Overflow pH Adjustment System
- Clarifier Overflow Anti-Scalant Addition System
- Effluent Filtration System
- Plant Effluent System
- Sludge Dewatering System

Table 2-1. Water Treatment Facility Section References

System	Control	Major Components	Laboratory or Onsite Testing Controls	Start Up	Normal Operation	Alternate Operation	Emergency Operation and Failsafe Features
Seep and Surface Water Collection System – Section 2.2							
Collection and Conveyance System for Outfall 001	2.2.1.1	2.2.1.2	2.2.1.3	2.2.1.4	2.2.1.5	2.2.1.6	2.2.1.7
Collection and Conveyance System for Outfall 002	2.2.2.1	2.2.2.2	2.2.2.3	2.2.2.4	2.2.2.5	2.2.2.6	2.2.2.7
Collection and Conveyance System for Outfall 003	2.2.3.1	2.2.3.2	2.2.3.3	2.2.3.4	2.2.3.5	2.2.3.6	2.2.3.7
Collection and Conveyance System for Outfall 004	2.2.4.1	2.2.4.2	2.2.4.3	2.2.4.4	2.2.4.5	2.2.4.6	2.2.4.7
Collection and Conveyance System Pollution Control Pond	2.2.5.1	2.2.5.2	2.2.5.3	2.2.5.4	2.2.5.5	2.2.5.6	2.2.5.7
Emergency Response and Pump Watch Procedure for the Water Collection System is found in Section 2.2.6							
Pumping Stations, Plant Conveyance Pipeline, and Water Treatment Plant Influent System – Section 2.3							
Pumping Stations and Plant Conveyance Pipeline Information is found in Section 2.3							
WTP Influent System	2.3.4.1	2.3.4.2	2.3.4.3	2.3.4.4	2.3.4.5	2.3.4.6	2.3.4.7
Primary Treatment System – Section 2.4							
Neutralization and Precipitation	2.4.1.1	2.4.1.2	2.4.1.3	2.4.1.4	2.4.1.5	2.4.1.6	2.4.1.7
Lime Slurry System	2.4.2.1	2.4.2.2	2.4.2.3	2.4.2.4	2.4.2.5	2.4.2.6	2.4.2.7
Flocculant Addition System	2.4.3.1	2.4.3.2	2.4.3.3	2.4.3.4	2.4.3.5	2.4.3.6	2.4.3.7
Primary Solid Liquid Separation	2.4.4.1	2.4.4.2	2.4.4.3	2.4.4.4	2.4.4.5	2.4.4.6	2.4.4.7
Effluent Filtration	2.4.5.1	2.4.5.2	2.4.5.3	2.4.5.4	2.4.5.5	2.4.5.6	2.4.5.7
Clarifier Overflow pH Adjustment	2.4.6.1	2.4.6.2	2.4.6.3	2.4.6.4	2.4.6.5	2.4.6.6	2.4.6.7
Plant Effluent System – Section 2.5							
Plant Effluent System	2.5.1	2.5.2	2.5.3	2.5.4	2.5.5	2.5.6	2.5.7
Sludge Handling Facilities – Section 2.6							
Sludge Dewatering	2.6.1.1	2.6.1.2	2.6.1.3	2.6.1.4	2.6.1.5	2.6.1.6	2.6.1.7
Sludge Transport and Final Disposal – Section 2.7							
Sludge Transport and Final Disposal Information is found in Section 2.7							

2.1 Overview of Seep and Surface Water Collection System and Treatment Plant Operation

The water treatment facilities include the following:

- Water Collection System
- Pumping Station and Conveyance Pipeline
- Raw Water Supply System
- Primary Treatment Process
- Plant Effluent System
- Sludge Handling System

This section provides a general description of these facilities and processes. Sections 2.2-2.6 provide detailed descriptions of the facilities and processes.

2.1.1 Seep and Surface Water Collection System

The Midnite Mine ceased operation in September of 1981 and from that time water has collected in the two open mining pits on the site. In February of 1985, Dawn Mining Company (DMC) applied to the EPA for an NPDES permit to allow discharge of treated water from those pits and other waters collected on the site. In September of 1986, the EPA issued DMC an NPDES permit which designates four outfall locations for discharge. Construction and implementation of the water collection system began upon receipt of the NPDES Permit.

As shown in Figure 1, seep and surface water is collected at six different locations which consist of the Pollution Control Pond (PCP), Western Drainage Pump Station, Restroom Pumpback Station, East Seep Pump Station, Far East Seep Pump Station, and Blood Pool Pump Station. Waters collected are pumped to the PCP and then Pit 3 or directly to Pit 3.

As shown in Figures 1 and 2, the pump-back systems convey the water to be treated from the seeps to Pit 3 where it is pumped at 450 gpm to the water treatment plant. Approximately 50 gpm from Pit 4 is also pumped to the plant for treatment.

2.1.2 Specific Treatment Plant Operations and Flow Diagrams

In the treatment plant, the solution is mixed with lime and barium chloride to precipitate insoluble metal hydroxides, oxides, and sulfates. The resultant slurry is settled and filtered to produce a solution free of solids for discharge to the Eastern Drainage and a precipitate which has historically been hauled to DMC's Ford millsite for disposal in a lined uranium tailings pond (TDA-4).

Flow diagrams for the plant are shown in Figures 3, 4 and 5 and the treatment plant layout is shown in Figure 6. The plant is designed to operate at a flow rate of up to 500 gpm. Detailed descriptions of the unit operations and processes are found in Sections 2.2-2.6 and process troubleshooting is found in Section 3.0.

2.1.2.1 Neutralization Tanks

The water to be treated (influent) is pumped into a three-stage neutralization circuit. A solution of barium chloride is added to the feed stream to ensure precipitation of the radium^{226}. Lime

slurry is added to the influent water to adjust the pH resulting in precipitation of uranium and other metals. The water flows between tanks by gravity overflow pipes.

2.1.2.2 Primary Solid Liquid Separation and Sludge Handling

The discharge from the neutralization tanks is pumped to two clarifiers for solid/liquid separation. Flocculant is added to the discharge stream from the neutralization tanks to aid in solid settling rates. The thickened solids are pumped from the bottom of the clarifiers to a steady head tank, and partially recycled to the first stage of the neutralization tanks where the raw feed is reacted or "seeded" with recycled sludge to neutralize free acid, begin the chemical reactions and increase the density of the final sludge. From the steady head tank, the slurry is pumped to a centrifuge to remove residual water and produce a final filter cake. The liquid centrate from the centrifuge is pumped back to the neutralization surge tank where it is mixed with the neutralized water and further processed through the balance of the plant.

The overflow from the clarifier is gravity fed to the clarifier overflow tank where anti-scalant is added and the pH adjusted to between 6 and 9 and pumped to down-flow sand filters. The filter discharge is sent to the filter discharge tank (clearwell) before being discharged to the Eastern Drainage. The filter backwash is directed to the filter backwash tank (mudwell) and pumped to the first neutralization tank for processing with the plant influent.

2.1.2.3 Plant Makeup Water Sources

Water from Pit 4 is used as makeup water for the process solutions (e.g., lime slurry, flocculant) and potable water is trucked to the site for mixing the barium chloride solution. Pit 4 water is not used for barium chloride make-up because it would react with the barium chloride during mixing, which can result in precipitates and reduction of the concentration of the barium chloride available for reaction with the waters to be treated by the plant.

2.1.3 Process Operating and Sizing Criteria

General operating and equipment criteria are tabulated in Appendix C.

The plant is operated four days per week for approximately 7 months of the year. However, the operational season may be more or less depending on annual precipitation. The plant is shutdown during the winter months. The plant is designed to run approximately 500 gpm through the treatment plant; however the actual flow processed each year may be less.

Scheduled operating days per year	112
Operating Time – hours per day	24
days per week	4
Feed Rate – Instantaneous gpm	250 to 500
Approximate Gallons per year processed	64,512,000 to 80,640,000

During the spring thaw, the roads from the millsite to the water treatment plant are temporarily closed to trucks, and operations cease during this time.

2.2 Seep and Surface Water Collection System

This Water Management procedure was designed and implemented to effectively capture expressions of surface waters that do not meet the performance standards, presented in this plan (Table 6-3), that would otherwise discharge from the mine site.

Figure 1 presents a flow schematic of the collection and pumping of water for Outfalls 001-004. As shown on Figure 2, seep and surface water is collected at six different locations which consist of the Pollution Control Pond (PCP), Western Drainage Pump Station, Restroom Pumpback Station, East Seep Pump Station, Far East Seep Pump Station, and Blood Pool Pump Station. Waters collected in the Western Drainage Pump Station and Restroom Pumpback Station are pumped to the PCP, water from the PCP is then pumped to Pit 3. During the very limited portion of the year when water flows into this system, water collected at the Far East Seep Pump Station is pumped to the East Seep Pump Station and then to Pit 3. Higher flow collected during this period are pumped to the Blood Pool Pump Station and then to Pit 3. Both of these pump stations operate only during high water flow times of the year, typically during snowmelt.

The following sections describe the outfall collection and pumpback systems at the site.

2.2.1 Collection and Conveyance System for Outfall 001

Outfall 001 consists of a perennial stream and two small seeps. The water from the stream and seeps is captured and transferred to the Pollution Control Pond (PCP) to await periodic pumping into Pit 3 for temporary storage and eventual treatment at the WTP and subsequent release. The perennial stream flows from the toe of the waste rock dump and is known as the Western Drainage outfall. The two small seepages flow from the alluvium about one-half way between the waste rock and the Western Drainage Pump Station. These seepages are collectively known as the Western Drainage Jr. seeps and are diverted through a single pipe into the primary tank at the Western Drainage Pump Station.

This station pumps from a low base flow of approximately 18 gallons per minute (gpm) during the winter to nearly 1,000 gpm during wet spring conditions. Three large tanks are utilized to capture flow and three permanent pumps to transfer water to the PCP. Three auxiliary pumps can be quickly mobilized and activated to accommodate extreme flow conditions. The Western Drainage Pump Station has a radio alarm system and video cameras that can be accessed remotely.

2.2.1.1 Control

As the primary tank at this pump station fills, a float switch activates the primary, or "green", pump, which will pump the tank down during base flows. If the primary pump fails or the flow is too great for the primary pump, the tank continues to fill until another float switch activates the secondary or "yellow" pump. These two pumps draw water out of the primary tank. If they cannot keep up with the flows or both pumps fail, the water overflows into the secondary tank where a similar float switch system will activate a third or "red" pump. The third tank is for storage and does not have pumps or float switches installed.

2.2.1.2 Major Components

- Concrete collection basin
- Large diameter gravity piping
- Collection tanks (3)
- Permanent pumps (2)
- Overflow (1)
- Auxiliary/backup pumps (3)
- Electrical switchgear
- Standby generator
- UHF radio alarm system
- VHF radio/phone alarm system
- Video monitoring system
- Containment building
- Discharge piping

See Appendix C for more detailed information on pumps, equipment, piping, instrumentation, and power.

2.2.1.3 Laboratory or Onsite Testing Controls

There are no laboratory or onsite testing controls associated with this system.

2.2.1.4 Start Up

This system cycles as necessary to empty the collection tanks. Therefore, a specific start up procedure is not applicable to this system.

2.2.1.5 Normal Operation

The system is designed to operate with minimum operator input and maintenance. Water flowing from the waste rock dump is directed into the concrete collection basin and allowed to flow by gravity into the primary tank inside the building. As the first tank fills, a float switch activates the primary, or "green", pump, which will pump the tank down during base flows. If the primary pump fails or the flow is too great for the primary pump, the tank continues to fill until another float switch activates the secondary or "yellow" pump. These two pumps draw water out of the primary tank. If they cannot keep up with the flows or both pumps fail, the water overflows into the secondary tank where a similar float switch system will activate a third or "red" pump. If all pumps fail or cannot keep up, the water overflows into the tertiary tank outside the building. This tank has no pump and is included to provide additional response time for the on-call responder.

2.2.1.6 Alternate Operation

There is no alternate operation for this system.

2.2.1.7 Emergency Operation and Failsafe Features

During power outages and "pump watch" periods, the Western Drainage Pump Station must be monitored at intervals corresponding to the calculated filling rate. The "pump watch" procedure is described in Section 2.2.6.

A radio alarm system operated on the DMC private frequency provides system alert capability. The alarm system detects tank overfill situations, power outages, and loss of power phase(s), and will send a daily test signal to verify operation and readiness. An alarm activation float switch is located in the primary tank above the pump float switches. When activated, the alarm system sends out an instantaneous radio alarm. The alarm float also activates a telephone alert system that dials preprogrammed phone numbers of the "on call" responders. There is a similar switching and alert system assigned to the secondary tank. Upon being made aware of an alarm situation, the responder(s) can access the video monitoring system. The two monitoring cameras can be used to help determine or verify the alarm. A more detailed discussion of the alarm system is presented in Section 2.2.6.

The emergency generator, which is always plugged in to keep the engine warm, starts three seconds after a power interruption. After a four minute run-up, the automatic switch gear in the control room routes the electrical pathway from Avista power to generated power and the pumpback system is reenergized.

2.2.2 Collection and Conveyance System for Outfall 002

Outfall 002 consists of a small seepage, identified as the Dam Toe Seep, which drains from the toe of the PCP dam. The Dam Toe Seep has a flow rate of a few gpm and is captured in an underground collection system, known as the Restroom Pumpback Station. The water captured by the Restroom Pumpback Station is pumped to the PCP to await periodic pumping into Pit 3 for temporary storage and eventual treatment at the WTP and subsequent release.

2.2.2.1 Control

The Restroom Pumpback Station consists of an underground collection tank with two submersible water pumps. The submersible pumps are activated by float switches. As the tank becomes full, a float switch activates the primary pump, which will pump the tank down by itself during normal flows. If that pump fails or the flow is too great for the primary pump, the tank continues to fill until a higher float switch activates the secondary pump.

2.2.2.2 Major Components

- Containment building
- Submersible pumps (2)
- Electrical switchgear
- Emergency Generator
- Underground collection tank (1)
- Discharge piping

See Appendix C for more detailed information on pumps, equipment, piping, instrumentation, and power.

2.2.2.3 Laboratory or Onsite Testing Controls

There are no laboratory or onsite testing controls associated with this system.

2.2.2.4 Start Up

This system cycles as necessary to empty the collection tank. Therefore, a specific start up procedure is not applicable to this system.

2.2.2.5 Normal Operation

The Restroom Pumpback Station is much simpler in design and operation than the Western Drainage Pump Station. The Restroom Pumpback station captures a small perennial seep and consists of a 1000 gallon polyethylene septic tank buried underground. In the buried tank are two submersible water pumps that are activated by float switches. Under normal conditions, only one pump operates leaving the other as a backup.

The Restroom Pumpback Station access road may or may not be plowed of snow during winter months. If the road is not plowed, this location is accessible by snowmobile.

2.2.2.6 Alternate Operation

There is no alternate operation for this system.

2.2.2.7 Emergency Operation and Failsafe Features

During power outages and “pump watch” periods, the Restroom Seep Pump Station must be monitored at intervals corresponding to the calculated filling rate. The “pump watch” procedure is described in Section 2.2.6.

The power to the Western Drainage Pump Station and the Restroom Pumpback Station are fed off the same supply and loss of power at the Western Drainage Pump Station would also indicate that there is a power interruption at this location.

An automatic start, backup generator is installed at this location. In the event that the main power fails, the emergency generator will automatically start and provide power for the pumps.

2.2.3 Collection and Conveyance System for Outfall 003

Outfall 003 is near the eastern and southern boundary of the former mine leasehold. It consists of the East Seep and the Far East Seep. The East Seep is a small perennial discharge with a flow rate varying from a few drops per minute to a few gpm. The Far East Seep is intermittent, usually flowing only during spring run-off up to about 50 gpm. The East Seep is captured in an underground tank and pumped directly to Pit 3, and the Far East Seep is captured in a surface tank and pumped into the Blood Pool pumpback system during periods of high flow and into the East Seep collection tank during periods of low flow.

2.2.3.1 Control

The East Seep Pump Station consists of an underground collection tank with two submersible water pumps. The submersible pumps are activated by float switches. As the tank becomes full, a float switch activates the primary pump, which will pump the tank down by itself during normal flows. If that pump fails or the flow is too great for the primary pump, the tank continues to fill until a float switch, located higher on the tank, activates the secondary pump.

The Far East Seep Pump Station consists of an aboveground collection tank with three submersible water pumps. The submersible pumps in this station are activated by float switches. As the tank becomes full, a float switch activates the primary pump which pumps the water to the East Seep Pump Station. If that pump fails or the flow is too great for the primary pump, one or two larger capacity pumps are activated by float switches and pump the water to the Blood Pool Pump Station.

2.2.3.2 Major Components

EAST SEEP

- Containment building
- Submersible pumps (2)
- Electrical switchgear
- Emergency Generator
- Underground collection tank (1)
- Discharge piping

See Appendix C for more detailed information on pumps, equipment, piping, instrumentation, and power.

FAR EAST SEEP

- Above ground tank
- Submersible pumps (3)
- Electrical switchgear
- Discharge piping

See Appendix C for more detailed information on pumps, equipment, piping, instrumentation, and power.

2.2.3.3 Laboratory or Onsite Testing Controls

There are no laboratory or onsite testing controls associated with this system.

2.2.3.4 Start Up

The East Seep Pump Station system cycles as necessary to empty the collection tank. Therefore, a specific start up procedure is not applicable to this system.

The Far East Seep Pump Station typically runs during the spring when snowmelt is occurring. The following steps shall be performed to start this system after extended periods of shutdown:

A. Check the pipelines to the Blood Pool and East Seep Pump Stations

B. Check that power is on to the system

C. Lower the submersible pumps into the tank

D. Open the discharge valve on the pipelines

E. Check pump operation and float switch operation by manually activating the float switches

2.2.3.5 Normal Operation

The East Seep and Far East Seep Pump Stations are fairly simple in design and operation. The East Seep Pump Station captures a small perennial seep and consists of a 1000 gallon polyethylene septic tank buried underground. In the buried tank are two submersible water pumps that are activated by float switches. Under normal conditions, only one pump operates leaving the other as a backup.

The Far East Seep Pump Station consists of an aboveground collection tank with three submersible water pumps. This pump station collects water from an intermittent seep that typically flows during snowmelt. The submersible pumps in this station are activated by float switches. As the tank becomes full, a float switch activates the primary pump which pumps the water to the East Seep Pump Station. If that pump fails or the flow is too great for the primary pump, one or two larger capacity pumps are activated by float switches and pump the water to the Blood Pool Pump Station.

During the winter, the East Seep Pumpback Station access road is not plowed of snow and is only accessible by snowmobile. During muddy periods in the spring, the East Seep Pumpback Station is only accessible by foot. The Far East Pumpback Station does not have vehicle access and is only accessible by snowmobile or by foot.

2.2.3.6 Alternate Operation

There is no alternate operation for this system.

2.2.3.7 Emergency Operation and Failsafe Features

During power outages and “pump watch” periods, the East Seep and Far East Seep Pump Stations must be monitored at intervals corresponding to the calculated filling rate. The “pump watch” procedure is described in 2.2.6.

The power to the Western Drainage Pump Station and the East Seep and Far East Seep Pump Stations are fed off the same supply and loss of power at the Western Drainage Pump Station would also indicate that there is a power interruption at these locations.

An automatic start, backup generator is installed at the East Seep Pump Station. In the event that the main power fails, the emergency generator will automatically start and provide power for the pumps.

The Far East Seep Pump Station is powered by a secondary feed from the Blood Pool Pump Station. Emergency power is by the automatic generator installed at the Blood Pool building.

2.2.4 Collection and Conveyance System for Outfall 004

Outfall 004 is the designated discharge point for treated water from the WTP. If untreated water from the Blood Pool system were to be discharged, it would be released at Outfall 004. The Blood Pool flows intermittently during the spring melt to a maximum of approximately 120 gpm

and is located on the waste rock pile immediately above the Far East Seep. Water from several seepages is directed into an underground tank which is then pumped into Pit 3.

2.2.4.1 Control

The Blood Pool Pump Station consists of an underground settling tank and a collection tank with three submersible water pumps. The submersible pumps are activated by float switches. As the collection tank becomes full, a float switch activates the primary pump, which will pump the tank down by itself during normal flows. If that pump fails or the flow is too great for the primary pump, the tank continues to fill until another float switch activates a second pump. During periods of high flow, a larger pump is manually started and stopped, as required.

2.2.4.2 Major Components

- Building
- Electrical switchgear
- Emergency Generator
- Underground settling tank (1)
- Underground collection tank (1)
- Submersible pumps (3)
- Discharge piping

See Appendix C for more detailed information on pumps, equipment, piping, instrumentation, and power.

2.2.4.3 Laboratory or Onsite Testing Controls

There are no laboratory or onsite testing controls associated with this system.

2.2.4.4 Start Up

The Far East Seep Pump Station typically runs during the spring when snowmelt is occurring. The following steps shall be performed to start this system after extended periods of shutdown:

1. Check the pipelines to the Blood Pool and East Seep Pump Stations
2. Check that power is on to the system
3. Lower the submersible pumps into the tank
4. Open the discharge valve on the pipelines
5. Check pump operation and float switch operation by manually activating the float switches

2.2.4.5 Normal Operation

This collection system typically only operates for a brief period during extreme snowmelt. The Blood Pool Pump Station consists of an underground settling tank and a collection tank with three submersible water pumps. The submersible pumps are activated by float switches. As the collection tank becomes full, a float switch activates the primary pump, which will pump the

tank down by itself during normal flows. If that pump fails or the flow is too great for the primary pump, the tank continues to fill until another float switch activates a second pump. During periods of high flow, a larger pump is manually started and stopped, as required. The settling tank is cleaned out once per year. The tank is cleaned out by using a sump pump to pump the semisolids into a 55 gallon drum.

2.2.4.6 Alternate Operation

There is no alternate operation for this system.

2.2.4.7 Emergency Operation and Failsafe Features

During power outages and "pump watch" periods, the Blood Pool Pump Station must be monitored at intervals corresponding to the calculated filling rate. The "pump watch" procedure is described in Section 2.2.6.

The power to the Western Drainage Pump Station and the Blood Pool Pump Station are fed off the same supply and loss of power at the Western Drainage Pump Station would also indicate that there is a power interruption at this location.

In the event that the main power fails at the Blood Pool Pump Station, the emergency generator will automatically start and provide power for the pumps.

2.2.5 Collection and Conveyance System Pollution Control Pond

In 1978, a seepage of water emerged from the toe of the waste rock dump in the natural depression known as the Central Drainage. An impoundment was constructed across the drainage near the leasehold boundary to retain the seepage. What became the Pollution Control Pond (PCP) was created behind the impoundment. The PCP impoundment is constructed with boulders and heavy rock and is keyed into the alluvial bedrock formation. It is clay lined and is effective in capturing the water emanating from the waste rock dump. The PCP not only directly captures the seepage from the toe of the waste rock dump in the Central Drainage, but also serves as an intermediate holding pond for the waters collected at various pumpback sites. Therefore, the PCP requires periodic pump out to Pit 3.

2.2.5.1 Control

There are no automated controls associated with this system.

2.2.5.2 Major Components

- Building
- 40 hp centrifugal pumps (2)
- Electrical switchgear
- Suction line and foot valve
- Discharge line
- Emergency generator
- Auxiliary diesel pump (winter only) (1)
- Priming pump (1)

See Appendix C for more detailed information on pumps, equipment, piping, instrumentation, and power.

2.2.5.3 Laboratory or Onsite Testing Controls

There are no laboratory or onsite testing controls associated with this system.

2.2.5.4 Start Up

A. Begin by selecting the proper intake for the pump to be used.

B. Submerge the foot valve in the PCP water.

C. Connect the primer hose to the selected pump at discharge end of pump and open valve.

D. Submerge primer pump in PCP water and start.

E. Monitor the filling process making sure air pockets are purged from intake line.

F. When intake and pump are filled past the pump, shut off primer pump and valve.

G. Start the appropriate pump at switch panel.

H. Determine that pumping has started by sound and pressure gauge.

I. Open seal water valve until water squirts from end of water tube.

J. Monitor system until pressure stabilizes, which indicates that water is ‘over the hill’.

K. Open line bleed valve until ~ 5 gpm flows from hose.

L. Verify that water is discharging from end of pump line in Pit 3.

2.2.5.5 Normal Operation

Frequent observation and weekly inspection and level measurements are made. When the PCP water level reaches a predetermined level, the pump(s) are started and the transfer of water to Pit 3 begins. During normal flow periods, only one pump is necessary and is operated 24 hours a day until the pond level is reduced to the desired level. Higher flow periods will necessitate the use of the second electric pump and in extreme conditions, an auxiliary diesel powered pump is available.

The level of the PCP pond is measured using the “steps” that go down into the pond, with step #1 being at the top of the pond. The operating level is maintained between step #10 (high level) and steps #15/#16 (low level). When the PCP level reaches step #10, the pump is turned on. When the level declines to step #15 or #16, the pump is shut off.

While these pumps are being operated, the system is monitored several times during the day, including weekends. The following information is recorded during the operational checks:

1. Verify that the appropriate pressure is registered on pump gauge.
2. Verify that flows from the seal tube and bleed hose are appropriate.
3. Verify that footvalve is clear of obstructions.
4. Measure PCP level (i.e., record the “step” that corresponds to the pond level).
5. Determine either by feel or infrared thermometer that motor is within temperature range.
6. Make general observation of entire pump system.
7. Follow pipeline to Pit 3 and check for leaks.
8. Record flowmeter reading at top of hill in pipeline.
9. Verify that water is flowing from end of pipe.

2.2.5.6 Alternate Operation

There is no alternate operation for this system.

2.2.5.7 Emergency Operation and Failsafe Features

The consequences of a power outage at the PCP do not typically require an immediate response as there is sufficient capacity in the PCP to store water for an extended period of time. Operating the system during extreme cold weather is avoided, but if a power interruption were to occur, the “bleed line” would drain the pipeline before it could freeze. A 100 kilowatt generator is on permanent standby at this location in case of an extended power interruption. However, there is no transfer capability at this location. The generator must be hard wired into the electrical control box to operate the pumps. This, and any, electrical repair, modification or maintenance must not be attempted by unqualified personnel.

2.2.6 Emergency Response and Pump Watch Procedure

2.2.6.1 Pump Watch Procedure

It is important that the system be closely monitored and that there is appropriate time for response in the event of a problem with the water collection system. Water collection flow rates are measured weekly under normal flow conditions, and daily during high flow conditions. From these flow measurements, the critical response can be determined. Table 2-2 shows the time available for a responder to arrive based on the current flow rates and tank storage capacity at the Western Drainage Pump Station. The response time assumes that the Western Drainage Pump Station primary tank is full to the alarm level and that the secondary and tertiary tanks are empty. When the response time is reduced to below the margin of time to respond, a "pump watch" procedure is activated.

Table 2-2. Western Drainage Response Time

Flow (gpm)	Hrs	Min	Flow (gpm)	Hrs	Min
5	52	29	115	2	17
10	26	15	120	2	11
15	17	30	125	2	6
20	13	7	130	2	1
25	10	30	140	1	52
30	8	45	150	1	45
35	7	30	160	1	38
40	6	34	170	1	33
45	5	50	180	1	27
50	5	15	190	1	23
55	4	46	200	1	19
60	4	22	210	1	15
65	4	2	220	1	12
70	3	45	230	1	8
75	3	30	240	1	6
80	3	17	250	1	3
85	3	5	260	1	1
90	2	55	270	0	58
95	2	46	280	0	56
100	2	37	290	0	54
105	2	30	300	0	52
110	2	23			

During periods of high flow and when the time for response is minimal, 24-hour surveillance of the pump stations is necessary. This period usually occurs during the winter or early spring when the WTP is not operating and the plant operators are available and 'on-call'. An operator schedule is prepared and operators report to duty to facilitate monitoring and operation of the emergency systems as needed.

During this period, the daily monitoring schedule for items listed in Section 7.3 are performed more frequently to ensure that an untreated discharge does not occur. A predetermined inspection route and schedule for all stations and systems is established. This procedure is modified to fit specific or unusual situation(s) as they occur.

2.2.6.2 Emergency Response

Emergency response is most critical at the Western Drainage, as the flow rates are consistently highest here. Most cases of power outage are caused by summer electrical storms or winter snow, during these periods the flow rate is typically low and ample time is available for adequate response. A power outage during "pump-watch" or during the WTP operating season is not critical, as personnel are already onsite.

A radio alarm system operated on the DMC private frequency provides system alert capability. The alarm system, located at the Western Drainage Pump Station, detects tank overfill situations, power outages, and loss of power phase(s), and also sends a daily test signal to verify operation and readiness. When activated, the alarm system sends out an instantaneous radio alarm. If an alarm is triggered, the radio alert will begin immediately,

followed by a repeat every 15 minutes for 90 minutes and is coded to describe the situation. When the alarm system activates, a telephone alert system also dials preprogrammed phone numbers of select DMC personnel. The telephone alert system will cycle through home phones, cell phones and pagers until a responder is reached and the responder enters an acknowledgement code. There is a similar switching and alert function assigned to the secondary tank; however, the second alert will only add to the primary alert that should already be transmitting.

Upon correction of the upset condition, the radio system will send out a "clear" message. However, attention must still be given to the situation until it is verified that all systems have returned to normal. The "clear" signal will be sent after a power alarm clears but may only indicate that the emergency generator has taken over. In addition to the return of power or phase, the “clear” signal will be sent upon correction of the level alarm condition in the primary tank. In the event of level alarm activation in the secondary tank, a manual reset must occur.

Upon being made aware of an alarm situation, the responder(s) can access the video monitoring system. If the responder(s) can access the internet in timely fashion, the website can be brought up and a preliminary assessment of the cause of the alarm made using the video cameras. The two video monitoring cameras can be used to help determine or verify the alarm. The inside camera is trained on the secondary tank with a status light panel in the foreground. The panel indicates which pumps are operating and if they are actually pumping, and whether there is power, three electrical phases, and the source of the power. The responder on call may, or may not, respond depending on information gained from the video camera.

The outside camera shows weather conditions, intrusion, and generator operation. The outside camera’s most useful function is allowing the monitoring of heavy precipitation, usually snow, which could cause a power interruption. While less effective, the outside video camera can also suggest high winds. During heavy snow, electrical storms, or high winds, response personnel will be on a higher level of alert.

In the event of a power outage lasting more than three seconds, the emergency generator will start. After a four minute run-up, the automatic switch gear in the control room routes the electrical pathway from Avista power to generated power, and the permanent pump system is again energized. At this point the radio alarm system will activate and send a “clear” signal. This signal must not be confused with the same signal that indicates that Avista power has been restored.

In the event of an alarm signal being received by direct radio contact, telephone or pager, and the responder is not near the internet, he or she shall start toward the mine site. The on-call responder should be in their radio equipped vehicle, if not at their base station, and must remain within the response zone, using Table 2-2 as guidance. The responder should have appropriate attire, food and other comfort gear as appropriate, and in snowy conditions, have the snowmobile in their vehicle as well as a chainsaw.

The responder must have the necessary understanding of the system to react to the specific situation and to return the system to normal or activate recovery systems available to insure that there is no release of water. He should also monitor his vehicle radio and stay in communication with other alert personnel.

2.3 Pumping Stations, Plant Conveyance Pipeline and Water Treatment Plant Influent System

2.3.1 Pumping Station Type

2.3.1.1 Pit 3 Pump Station

Pit 3 water is pumped to the WTP by an electrically driven pump. Feed to the plant is monitored by a flow meter and controlled by a hand control valve. The flow meter is equipped with a low flow alarm. The pump is started and stopped from a local hand switch at the pump.

2.3.1.2 Potable Water Pump Station

A potable water pump station does not exist at the WTP. Potable water is brought to the plant in a 300 gallon tank by truck, for makeup of the barium chloride solution and for handwashing and eyewash stations, as needed. A 400 gallon potable water tank is located onsite for supply to the plant sink and eyewash stations. Drinking water for the plant is provided in 5 gallon bottles with a dispenser.

2.3.1.3 Pit 4 Pump Station

Pit 4 water is supplied to the plant by a diesel motor driven pump. Pit 4 water is used for makeup water to the lime system and flocculant addition system. The flow is controlled using a pressure control valve; when Pit 4 water is not being used for chemical makeup, it is processed through the clarification portion of the plant.

2.3.1.4 Fire-Flow Pumping Equipment

There is no fire flow pumping equipment at the plant.

2.3.2 Pumping Station Classification

2.3.2.1 Capacity

Pit 3 Pump – This pump is designed for 600 gpm. Normal operating flow rate to the plant is 450 gpm.

Pit 4 Pump – This pump is designed for up to 300 gpm. Normal operating flow rate to the plant is 50-70 gpm.

2.3.2.2 Energy Source

Pit 3 Pump – This mobile 3” x 4” Durion pump is powered by 75 horsepower, 480 volt, 3-phase electric motor. No standby power is available for the Pit 3 pump. All flow to the plant is discontinued in the event of a power failure of the incoming plant 480 volt feed.

Pit 4 Pump – This pump is powered by 150 horsepower four cylinder diesel driven motor. The pump must be manually shut off to the plant in the event of a power failure of the incoming plant 480 volt feed.

2.3.3 Pipeline Types and Sizes

2.3.3.1 Midnite Mine – Water Treatment Plant Pit 3 Plant Supply Pipeline

A mobile 3” x 4” Durion pump supplies flow from Pit 3 to the plant at up to 450 gpm through a six-inch high-density polyethylene (HDPE) pipeline. Check valves are provided on the inlet and outlet of the pump to prevent backflow in the system. A return line from the supply pipeline is controlled by a hand operated butterfly valve to route supply water back into Pit 3, if needed.

2.3.3.2 Midnite Mine – Water Treatment Plant Pit 4 Pipeline

The pipeline from Pit 4 is a three-inch HDPE pipeline controlled through a pressure control valve, controlling the flow to approximately 50 gpm. The flow from Pit 4 can be diverted to the plant water chemical makeup system as discussed in Section 2.3.1, or may be sent to Clarifier #1 and mixed with treatment plant water.

2.3.3.3 Treated Effluent Pipeline

The treated effluent pipeline to the Eastern Drainage is a six-inch HDPE pipeline. The treated water from the clearwell is pumped by a 3" Gallagher vacseal pump to the plant discharge location.

2.3.4 Water Treatment Plant Influent System

Water from Pit 3 is pumped to the plant using a trailer mounted centrifugal pump located at Pit 3. Up to a flowrate of 450 gallons per minute (gpm) of Pit 3 water is pumped to the treatment plant through a 6-inch HDPE supply pipeline. The flow from Pit 3 is monitored at the treatment plant for operational purposes. The pipeline contains a check valve on the supply and discharge side of the pump to prevent back-flow of water, which may result in damage to the pump.

Approximately 50 gpm of water is pumped from Pit 4 and used for chemical makeup or processed through the treatment system. Water from Pit 4 is pumped using a diesel driven pump. A pressure control valve at the plant allows for partial diversion of the flow to the flocculant tank and the lime slurry tank for chemical makeup.

2.3.4.1 Control

A hand control valve allows the operator to control flow from Pit 3 to the first neutralization tank in the plant. A second valve is located on the return line to Pit 3. When the Pit 3 pump is running, the valve on the Pit 3 return line is closed and the flow to the WTP is controlled by partially opening or closing the hand control valve. The operator controls the flow by adjusting the hand control valve, checking the flow meter to determine if the flow is at the desired rate, and repeating this process until the flow is at the desired rate. There is a process control flow meter on the influent line to the plant and an adjustable low-flow alarm that alerts the operator if flow drops below a predetermined setpoint.

A hand control valve allows the operator to control flow from Pit 4 to Clarifier #1. The flow is conveyed from the pit through a 3-inch pipeline and typically maintained between 50 and 70 gpm. There is a process control flow meter on the Pit 4 influent line. When the Pit 4 pump is running, the flow from Pit 4 is controlled by partially opening or closing the hand control valve. The operator controls the flow by adjusting the hand control valve, checking the flow meter to determine if the flow is at the desired rate, and repeating this process until the flow is at the desired rate.

2.3.4.2 Major Components

The major components of the Water Treatment Plant Influent system include:

- Pit 3
  - Pit 3 pump (1)
  - Pit 3 conveyance piping to plant
  - Pit 3 hand control valve
  - Pit 3 flow meter/totalizer (1)
- Pit 4
  - Pit 4 pump (1)
  - Pit 4 conveyance piping to plant
  - Pit 4 pressure control valve
  - Pit 4 hand control valve
  - Pit 4 hand diversion valves to chemical makeup

See Appendix C for more detailed information on pumps, equipment, piping, instrumentation, and power.

2.3.4.3 Laboratory or Onsite Testing Controls

No laboratory or onsite testing controls are relevant to the operation and maintenance of the raw water supply system.

2.3.4.4 Start Up

All pipe joints and seals shall be checked prior to startup or immediately after startup. The hand control valve (HCV-108) should be closed to divert flow back to Pit 3 and the butterfly valve on the Pit 3 return line opened for approximately 10 minutes upon startup.

2.3.4.5 Normal Operation

Under normal operation of the raw water supply system, Pit 3 flow will be pumped directly to the treatment plant. The normal operating flow from Pit 3 is 450 gpm. Pit 4 flow will be pumped directly to the treatment system at approximately 50 gpm.

2.3.4.6 Alternate Operation

There is no alternate operation associated with the Pit 3 supply to the treatment plant.

During chemical makeup for lime slurry or flocculant mixing, a portion of Pit 4 water is diverted to the chemical makeup system by opening a hand operated valve.

2.3.4.7 Emergency Operation and Failsafe Features

If there is a problem requiring the flow of the plant to be shut off, the Pit 3 and Pit 4 supply pumps are manually shut off, or the flows directed back to the pit by opening and closing the associated hand valve and opening the Pit 3 return line. In the event of a power failure, the Pit 3 pump will lose power and shut off and the manual valve from Pit 4 at the plant must be closed by the operator. Pit 4 pump must be manually shutoff as soon as possible by the operator.

2.4 Primary Treatment System

2.4.1 Neutralization and Precipitation

Neutralization Tank #1 – Treatment begins with the Pit 3 water flowing through three mixing and neutralization tanks arranged in series. Prior to entering the first mixing and neutralization tank, barium chloride ($BaCl_2$) is injected to the system feed piping to initiate the removal of radium^{226}. The feed then enters neutralization tank #1 (tank #1) where the raw feed is reacted or "seeded" with recycled sludge to neutralize free acid, begin the chemical reactions, and increase the density of the final sludge. The tank is designed so that feed water enters and exits the tank after flowing through an upcomer. The upcomer directs flow from the bottom of the tank to the discharge at the top of the tank to ensure adequate retention time and prevent flow short circuiting.

The tank #1 10 horsepower (hp) agitator is designed to maintain a homogeneous suspension and provide mixing between the raw feed and the recycled sludge. Approximately 40 gallons per minute (gpm) of recycled sludge is pumped from the underflow of clarifier #2 to neutralization tank #1 and 15 gpm from the underflow of clarifier #1 is pumped to neutralization tank #1.

Neutralization Tanks #2 and #3 – The next two tanks, called neutralization tank #2 (tank #2) and neutralization tank #3 (tank #3) provide retention time for the precipitation of metals as hydroxides. The material from tank #1 gravity flows to tank #2 where lime slurry is added to raise the pH. Tank #2 is equipped with a 10 hp agitator to mix the feed water and the lime slurry. Tank #2 is designed with an upcomer to ensure adequate retention and chemical reaction time before flowing into tank #3 by gravity. The tank #2 outlet pH is measured and indicated locally. The target pH in tank #2 is 9.9.

Tank #3, also equipped with an upcomer and a 10 hp agitator, allows for additional time for the reaction of the lime slurry with the system feed. The target pH for tank #3 is 9.85. The pH for tank #3 is measured in the outlet line and is indicated and automatically recorded on a chart. The lime slurry pumping speed is adjusted based on maintaining the outlet pH of tank #3. The level in tank #3 is controlled by gravity overflow into the neutralization surge tank.

The treatment reactions are complete in approximately 20 minutes; however, the plant is designed for a minimum 30 minute retention time of the influent water in the neutralization circuit.

Neutralization Surge Tank - The neutralization surge tank provides the feed to the clarifiers which are the primary liquid-solid separation portion of the plant. In addition to flow from tank #3, water from the centrifuges (i.e., centrate) is pumped into the surge tank for processing through the plant. The surge tank effluent is pumped to the clarifiers using a variable speed transfer pump. Flocculant is directly injected into the clarifier feed piping to assist in solids removal at the clarifiers.

Relationship to Adjacent Units – Plant influent water is pumped from Pit 3 to Tank #1. The pumping system from Pit 3 as described in Section 2.4.

Following flocculant addition, treated water is discharged through the effluent pipes as described in Section 2.6. Sludge is containerized and transported to either TDA-4 or offsite as described in Section 2.7.

2.4.1.1 Control

Neutralization Tank #1 –The tank #1 water level is maintained by gravity flow to neutralization tank #2. The agitator in this tank runs continuously and is turned on in the control room or from the remote control panel on the 2nd level.

Neutralization tanks #2 and #3 – The tank #2 water level is maintained by gravity flow to tank #3 and the tank #3 water level is maintained by gravity flow to the neutralization surge tank. Agitators in each of the tanks run continuously and are turned on in the control room or from the remote control panel on the 2nd level. The tank levels are maintained using gravity flow. The pH is measured and manually logged at the outlet of tank #3. The pH is measured and automatically logged at the outlet of tank #2.

Neutralization Surge Tank – The surge tank is fed by gravity from the outlet of tank #3. The neutralized water level is maintained by a variable speed pump which pumps the water to the clarifiers. A high level alarm will activate if the water level in this tank is too high. The pumping rate from this tank is controlled by a variable frequency drive which is located in the control room and manually adjusted on the 2nd level of the plant. If this tank overflows, water flows to the floor sump where it can be pumped back to the tank after the cause of the overflow has been corrected.

2.4.1.2 Major Components

Neutralization

- Neutralization Tank #1, Polyethylene Tank (1)
- Neutralization Tank #1 Agitator (1)
- Neutralization Tank #2, Polyethylene Tank (1)
- Neutralization Tank #2 Agitator (1)
- Neutralization Tank #3, Polyethylene Tank (1)
- Neutralization Tank #3 Agitator (1)
- pH indicator and recorder (1)
- Neutralization Surge Tank – Fiberglass Tank (1)
- Clarifier Feed Pump (1)

See Appendix C for more detailed information on pumps, equipment, piping, instrumentation, and power.

2.4.1.3 Laboratory or Onsite Testing Controls

Neutralization Tank #1 – No laboratory or onsite testing controls are relevant to the operation of tank #1.

Neutralization Tank #2 and #3 – The pH of tank #2 and tank #3 are indicated and the outlet pH recorded; however, the pH shall be checked using the field pH meter at least once per day to verify proper operation of the inline pH probes.

Purpose:	To verify proper operation of the neutralization tank pH probe. This test can also be used for process control when the reactor probe is out of service.
Sampling Site:	Neutralization tanks #2 and #3 contents near the reactor pH probes
Expected Range of Results:	pH between 9.8 to 10.5 during normal operations
Method Reference:	Standard Methods for the Examination of Water and Wastewater, AWWA.
Consequences of Test Results:	A pH measured in the laboratory which varies more than 0.3 pH units from the pH indicated by the reactor probe infers that the pH probe in the reactor should be cleaned or recalibrated. Following cleaning, proper operation will be verified by using a buffer solution of a known pH. A pH outside the range of 9.8 to 10.5 indicates a possible failure of the pH controller if the plant is in normal operation mode. Remedies and other possible causes are listed under Common Operating Problems for this unit.

Neutralization Surge Tank – No laboratory or onsite testing controls are relevant to the operation of this tank.

2.4.1.4 Plant Start-up

The common start-up procedures for the plant are described below.

Check Sequence Prior to Plant Start-up – The following general check sequence is a one-time operation intended to ensure proper operations of all equipment and subsystems. This procedure shall also be followed after extended periods of shut-down.

A. Verification of mechanical maintenance steps for all pumps, agitators, clarifier rake drives and centrifuges. This includes lubrication, drive alignment, vibration check and debris removal. Manufacturer's recommended procedures should be followed for individual equipment items.

B. Verification of electrical aspects of all pumps, agitators, drives and centrifuges. This includes verification of proper rotation of motors.

C. Verification and calibration of all instrumentation. This includes verification of input/output signals and proper span. Calibration of pH probes shall be verified with laboratory instruments and against known standards.

D. Tanks, piping and pumps shall be tested for leaks using water.

E. Verify that all necessary utilities are available including electricity, service water and potable water.

Plant Start-up Sequence

A. Start all agitators which include: lime mix tank, lime day tank, neutralization tanks #1, #2, and #3. The flocculant mix tank agitator should be started if the four hour mix time is not complete prior to shutdown.

B. Start both clarifier underflow pumps on recycle to neutralization tank #1, making sure there is flow from both thickeners. If flow is present, start rakes in both thickeners.

C. Start the barium chloride pump and then Pit 3 pump. The flow meter should be bypassed for approximately 10 minutes and the water recirculated to Pit 3. After approximately 10 minutes the recirculation valve can be shut and the water sent to the WTP.

D. Once the flow is discharging from neutralization tank #3, start the clarifier feed pump and flocculant pump. Set the flocculant flow to clarifiers at 1.5 gpm.

E. Once the clarifiers start to overflow, start clarifier overflow pump with flow bypassing the sand filters and being sent to Pit 3.

F. Start lime flow to neutralization tank #2 making adjustments until a pH of between 9.8 and 10.5 is reached and held.

G. Start sulfuric acid pump and adjust until a pH of 7 is reached and held in the flow to Pit 3.

H. Once flows and pHs are balanced, start anti-scalant pump and direct flow through the sand filters to clear well.

I. When the clear well has reached the one-half full mark, start discharge pump with flow directed to discharge area. Flow should be equal or slightly more than incoming flow to the WTP. The clear well should be kept at approximately one-half full to provide a buffer against overflow or running the effluent pump dry.

J. Start #1 and #2 conveyors making sure there is a sludge truck in place. Start and flush the centrifuge for approximately 10 minutes or until the centrate is clear.

K. Split flocculant flow between clarifiers and centrifuge. Flocculant flow on the flowmeters should read approximately 1.5 gpm to the clarifiers and approximately 1.5 gpm to the centrifuge.

L. Open sludge recycle lines enough to allow a flow to steady head tank.

M. When steady head tank is approximately 1/4 full, start centrifuge feed pump at a speed of 1.0, and adjust from there as needed. The feed rate to centrifuge #1 needs to be controlled by rotations per minute (rpm) and centrate color. When increasing feed rate, watch rpms. If they start to climb, slow rpm to the back drive. If they continue to climb, reduce feed rate until unit is stable.

N. Once centrifuge is stable, adjust sludge flow to head tank to maintain a constant level.

O. You should now be able to start monitoring and maintaining a balanced plant.

2.4.1.5 Normal Operation

The following information presents detailed information on plant operations on a unit-by-unit basis.

Neutralization Tank #1

Feed Source and Flow Rates	Pit 3 (Direct Feed): 450 gpm Clarifier #1 Recirculation: 15 gpm Clarifier #2 Recirculation: 40 gpm
pH of Reactor Contents	Normally 8.0 Total Effluent from tank #1: 500-510 gpm

Neutralization Tank #2

Feed Source and Flow Rates	Lime Slurry – Sufficient to maintain pH Neutralization tank #1 (gravity overflow): 500-510 gpm
Valve Positions	Lime Slurry Flow Control: Partially Open (pH depend)
pH of Reactor Contents	Normally 9.9

Neutralization Tank #3

Feed Source and Flow Rates	Neutralization tank #2 (gravity overflow): 500-510 gpm
pH of Reactor Contents	Normally 9.85

Neutralization Surge Tank

Feed Source and Flow Rates	Neutralization tank #3 (gravity overflow): 500-510 gpm Centrate Surge Tank: 10 gpm
Valve Positions	Clarifier Feed Pump Inlet and Discharge Valves: OPEN Flocculant Addition Valve: OPEN

2.4.1.6 Alternate Operation

There is no alternate operation of the neutralization system.

2.4.1.7 Emergency Operations and Failsafe Procedures

In the event of an accidental spill of untreated water due to pipe breaks or tank failure, the water will drain to the building sump. If necessary, the water will be directed to either tank #1 or the neutralization surge tank. The affected equipment shall be repaired. A high level alarm for the neutralization surge tank will sound in the plant to alert operator to overflow from this tank. See Section 3.1.1.7 for remedies to high tank level alarm.

2.4.2 Barium Chloride System

Barium chloride is used to initiate the removal of radium^{226}. The $BaCl_2$ is delivered to the treatment plant building in 50 pound bags, as necessary. The $BaCl_2$ solution is produced by adding 10 bags of dry chemical to the mixing tank and adding 1,200 gallons of potable water.

The solution should be mixed for 2 hours before transferring the solution from the mix tank to the day tank. The solution is transferred using the $BaCl_2$ transfer pump. Prior to entering the first mixing and neutralization tank, a solution of $BaCl_2$ is injected to the influent system piping

2.4.2.1 Control

Barium chloride solution is delivered to the treatment system using a Milton Roy metering pump set to deliver the desired flow. The feed rate of the $BaCl_2$ solution is approximately 170 to 180 ml/min.

2.4.2.2 Major Components

Barium Chloride Feed System

- Barium Chloride Mix Tank – Polyethylene Tank (1)
- Barium Chloride Storage Tank, Polyethylene Tank (1)
- Barium Chloride Transfer Pump (1)
- Barium Chloride metering pump (1)

See Appendix C for more detailed information on pumps, equipment, piping, instrumentation, and power.

2.4.2.3 Laboratory or Onsite Testing Controls

Once a day, the feed rate from the metering pump is measured using a graduated cylinder.

2.4.2.4 Start-Up

The following steps must be completed in order to start the $BaCl_2$ mix and feed system:

A. Verify that adequate water pressure is available and fill tank to above the agitator blades.

B. Start agitator.

C. Add ten, 50 pound bags of dry $BaCl_2$ to the mix tank while the tank continues to fill. Stop filling tank when it is approximately 1 foot blow the top of the tank (approximately 1200 gallons)

D. After approximately 2 hours of mixing, turn off the agitator, and transfer the solution from the mix tank to the day storage tank.

E. When the day tank contains a sufficient volume of solution to ensure that the chemical feed pump does not run dry, start the feed pump at the local control station.

2.4.2.5 Normal Operation

Feed source and flow rates: Barium Chloride. Dry $BaCl_2$ is received in 50 pound bags and loaded in the mix tank by hand. Potable water is used to mix with the $BaCl_2$. Pit 4 water should not be used for

	mixing as this water will cause an initial precipitation resulting is lower concentration solution for treatment. The mix ratio is approximately 500 pounds of dry $BaCl_2$ to 1,200 gallons of water.
Valve positions:	Normally the valve on the main service water feed is closed and the isolation valves on the chemical feed pumps are open.
General:	In general, the operation is as follows: The system is manual and the operator checks that there is a sufficient volume of $BaCl_2$ solution in the day tank. When the $BaCl_2$ day tank reaches a low level, the operator must transfer the mixed $BaCl_2$ solution from the mix tank to the day tank and mix a new solution to allow for the proper mixing time. When the mix tank reaches a low level or the day tank reaches a high level, the transfer pump is shut down.

2.4.2.6 Alternate Operation

There is no alternate operation of the flocculant mix and feed system.

2.4.2.7 Emergency Operations and Failsafe Features

There are no emergency operations associated with the flocculant mix and feed system.

2.4.3 Lime Slurry System

The hydrated lime is delivered by truck as a dry powder and slurried onsite. The lime slurry is used to supply the required alkalinity to neutralize the free acid and precipitate the metals in the plant feed. The lime slurry is added to neutralization tank #2. The system consists of one lime bin with a cone bottom, lime feeder, a lime slurry tank, a lime day tank, a transfer pump from the slurry to the day tanks and a lime delivery pump. The lime bin is pneumatically filled and contains a bag-house filter system.

One 50 ton lime bin is present to receive and store hydrated lime for use in the treatment system. The bin is equipped with a bottom activator (vibrator) to prevent bridging in the lime bin. The lime bin is pneumatically filled and contains a bag-house filter on the bin vent.

The bin is equipped with a lime feeder to meter hydrated lime into the lime slurry tank. A 4,800 gallon lime slurry tank is provided for preparation and storage of lime slurry. The tank is equipped with a mixer to mix the hydrated lime and water. The mixer is designed to incorporate dry lime into the slurry and to operate without excessive splashing.

One lime slurry pump is used to transfer lime slurry from the slurry tank to the 6,800 gallon day tank. One lime slurry pump is used to pump lime slurry from the day storage tank to Neutralization Tank #2. The discharge from the pump goes to a recycle loop to the pH control valve and then back to the lime day tank. The lime slurry is always recycled through this loop to help prevent plugging of the line. The slurry is normally recycled at the full capacity of the pump and no other flow control is required. A secondary line comes off the recycle line and is the lime feed to neutralization tank #2.

2.4.3.1 Control

The lime slurry is mixed manually by the operator in the lime slurry tank and the transfer pump operated manually. Lime is stored in the bin which is equipped with a dust collector and bin activator (shaker). The shaker is used to prevent and eliminate bridging at the bottom cone of the bin where the hydrated lime is dispensed from the silo. The shaker is turned on manually by the operator and run in approximately 2 minute intervals.

The hydrated lime tank is filled pneumatically through a hose hook-up from the lime delivery truck.

The lime auger below the lime bin is operated manually by the operator. Hydrated lime is fed from the auger for approximately 30 minute intervals to eliminate clumps. The total operation time for the auger is approximately 1.25 hours during the day shift and 1.25 hours during the night shift. The lime level in the mixing tank should be at least 1 to 2 feet below the auger discharge point when filling. The lime is then mixed with water from Pit 4, set up on a timed system, in the lime slurry tank to achieve a blend of lime slurry to be used in the neutralization process. The continuously operated agitator is operated manually by the operator and levels in the tank are periodically checked by the operator.

The slurry solution is recycled continuously in a piping loop to prevent plugging. The lime delivery pump is started and stopped manually at the pump. Lime slurry, from the recycle pipe loop, is taken off the loop for feed to neutralization tank #2. The flow in this line is manually regulated by a control valve, which is adjusted based on measured pH in neutralization tanks #2 and #3.

2.4.3.2 Major Components

The major components of the lime slurry system include:

- Lime bin (silo) – Steel Tank (1)
- Lime bin activator (1)
- Lime bin vent and filter (1)
- Lime auger (1)
- Lime Slurry Tank – Polyethylene Tank (1)
- Lime Agitator – Slurry Tank (1)
- Lime Day Tank – Polyethylene Tank (1)
- Lime Agitator – Day Tank (1)
- Lime Slurry Transfer Pump (1)
- Lime Slurry Delivery Pump (1)

See Appendix C for more detailed information on pumps, equipment, piping, instrumentation, and power.

2.4.3.3 Laboratory or Onsite Testing Controls

There are no laboratory or onsite testing controls relevant to the lime slurry system.

2.4.3.4 Start-Up

For more details of the lime system start-up and operation, please refer to the lime system operating manual. The following sequence shall be followed when starting the lime slurry system:

A. Verify that an adequate supply of hydrated lime exists in the lime silo.

B. Start the lime bin vibrator if needed and run for approximately 2 minutes. Start the auger timer and open the water hand control valve to the slurry tank. Start the slurry tank agitator once the liquid level in the tank covers the blades. After the lime slurry batch is mixed, start the transfer pump, and pump the slurry to the lime day tank.

C. Close the lime slurry control valve at tank #2.

D. Open the lime slurry recycle valve.

E. Verify that the inlet valve on the lime slurry pump is completely open.

F. Verify that the discharge valve on the lime slurry pump is mostly closed (about 90% closed).

G. Start the lime slurry pump. Slowly open the discharge pump valve until it is completely open.

H. Open the lime slurry control valve at tank #2 and adjust as necessary to maintain pH in tank #3.

2.4.3.5 Normal Operation

Feed Source and Flow Rates: Lime. Hydrated lime is received in bulk shipments and pneumatically transferred to the lime bin. The average amount of hydrated lime fed to the slurry tank is 2100 pounds per hour, during feeder operation.

Water. Service water from Pit 4 is mixed with the lime to produce a slurry containing 10 to 20 percent solids. The average flow rate of water during slurry makeup should be approximately 20 gpm.

General Operation: Lime slurry tank. The lime system is controlled by the operator. When the lime slurry tank reaches a low level which is defined as approximately 4 feet below the lime feeder (where it enters the tank), the operator starts the lime feeder timer and fully opens the makeup water valve. When the lime slurry timer shuts off (approximately 30 minutes) or when the tank level reaches approximately 2 feet below the lime feeder, the lime feeder is stopped and the valve on the makeup water is manually closed. The lime feeder and service water rates are manually adjusted to increase or decrease the slurry concentration. The

slurry concentration is increased if the manual control valve, that regulates the pH of neutralization tanks, is fully or nearly fully open. The slurry concentration is decreased if the manual control valve, that regulates the pH of neutralization tanks, is nearly closed or is plugging.

Lime transfer pump: The lime transfer pump is manually operated to transfer slurry from the lime slurry tank to the lime day tank as needed.

Lime slurry pump: The lime slurry is pumped in a continuous recycle loop from the lime day tank and back to the lime day tank. A branch off the recycle loop feeds lime to Neutralization tank #2. The recycle loop is used to allow large pipe diameters and high velocities to prevent plugging. The pump is normally operated at full capacity and no flow control is required.

2.4.3.6 Alternate Operation

There is no alternate operation option for the lime slurry system.

2.4.3.7 Emergency Operation and Failsafe Procedures

In the event of a lime system failure, a low pH will be measured at the reactor tanks, and flow must be diverted back to Pit 3.

2.4.4 Flocculant Addition System

Flocculant is delivered to the treatment plant building in 50 pound bags as necessary. The liquid flocculant is produced by adding 36 pounds of dry flocculant to the flocculant mixing tank and adding 1,200 gallons of water from the hand operated control valve on the Pit 4 water line. The solution should be mixed for 4 hours before transferring the flocculant from the mix tank to day tank. The flocculant is transferred using the flocculant transfer pump. The flocculant increases the size of particles to be settled from solution to aid in metals removal and is metered to the outlet of the neutralization overflow tank and to the feed stream of the centrifuge. An overall feed rate of 3.0 gpm is fed to the system which is split evenly to the clarifiers and centrifuge. A pressure tank fed by the flocculant pump and set at approximately 40 psi provides the backpressure necessary to supply flocculant to the system.

2.4.4.1 Control

Flocculant solution is delivered to the treatment system using a Moyno progressive cavity pump set to deliver the desired flow to the pressure tank. The flow from the pressure tank is then split equally to the clarifiers and the centrifuge(s) at approximately 1.5 gpm each.

2.4.4.2 Major Components

The major components of the flocculant mix and feed system include:

- Flocculant Mix Tank – Carbon Steel Tank (1)
- Flocculant Agitator – Mix Tank (1)
- Flocculant Day Storage Tank – Carbon Steel Tank (1)
- Flocculant Agitator – Day Tank – NOT USED
- Flocculant Transfer Pump (1)
- Flocculant metering pumps (1)
- Flocculant Pressure Tank (1)

See Appendix C for more detailed information on pumps, equipment, piping, instrumentation, and power.

2.4.4.3 Laboratory or Onsite Testing Controls

There are no laboratory or onsite testing controls associated with the flocculant mix and feed system. An operator may find that a lower or higher concentration of polymer solution increases the efficiency of the flocculation in the clarifier. This is done by trial and error and visual observation of the effects.

2.4.4.4 Start-Up

The following steps must be completed in order to start the flocculant mix and feed system:

A. Verify that adequate water pressure is available and fill tank to above the agitator blades.

B. Start agitator.

C. Add 36 pounds of dry flocculant to the floc mix tank while the tank continues to fill. Stop filling tank when it is approximately 1 foot blow the top of the tank (approximately 1200 gallons)

D. After approximately 4 hours of mixing, turn off the agitator, and transfer the flocculant from the mix tank to the day storage tank.

E. When the storage tank contains a sufficient amount of polymer solution to ensure that the chemical feed pump does not run dry, start the feed pump at the local control station.

F. The flow rate out of the pressure tank may need to be adjusted according to the plant flows.

2.4.4.5 Normal Operation

Feed source and flow rates:	Flocculant. Dry Flocculant is received in 50 pound bags and loaded in the mix tank by hand. Service water is used from Pit 4 line to mix with the flocculant. The flocculant mix ratio is approximately 36 pounds of dry flocculant to 1,200 gallons of water.
Valve positions:	Normally the valve on the main service water feed is closed and the isolation valves on the chemical feed pumps are open.
General:	In general, the operation is as follows: The system is manual and the operator checks that there is a sufficient volume of flocculant solution in the day tank. When the flocculant day tank reaches a low level, the operator must transfer the mixed flocculant to the flocculant day tank and mix a new solution to allow for the proper mixing time. When the mix tank reaches a low level or the storage tank reaches a high level, the transfer pump is shut down. The pressure in the flocculant pressure tank is adjusted to control the flow of flocculant to the system. The desired pressure of the tank is determined by visual observation of the flocculation and by the turbidity of the clarifier overflow streams.

2.4.4.6 Alternate Operation

There is no alternate operation of the flocculant mix and feed system.

2.4.4.7 Emergency Operations and Failsafe Features

There are no emergency operations associated with the flocculant mix and feed system.

2.4.5 Primary Solid Liquid Separation

The solution from the neutralization surge tank is split and diverted to two clarifiers arranged in parallel for separation of the solid and liquid phases by gravity settling. The solids are removed from the bottom of the clarifiers, and the clean water overflows through weirs at the top of the clarifiers into the clarifier overflow tank.

Each clarifier is equipped with a sludge recycle pump. The sludge recycle pump on clarifier #2 pumps approximately 40 gpm of sludge to neutralization tank #1. Approximately one-third of the flow (15 gpm) is pumped from clarifier #1 back to neutralization tank #1 with the remaining flow from clarifier #1 (25 gpm) directed to the sludge steady head tank before being pumped to the centrifuges for dewatering.

Primary solid liquid separation follows treatment in the neutralization tanks. Clean water overflowing from the top of the clarifiers is directed to the Clarifier Overflow tank and then pumped to the sand filtration units, which remove residual particles which the clarifiers did not capture. The sludge which settles to the bottom of the clarifiers is removed by centrifugal sludge

pumps and directed to neutralization tank #1 and the sludge steady head tank. The flow from the sludge steady head tank is pumped through one of two centrifuges, and the sludge cake collected in a truck for transporting to the disposal site.

2.4.5.1 Control

Clarifiers and Rake

Two clarifiers piped in parallel to the process allow time for solids and liquids to separate by a gravity settling process. The liquid above the settled sludge overflows the clarifiers to the clarifier overflow tank, where anti-scalant is added to protect the piping, equipment, and filters from sulfate precipitation. The overflow tank water is then pumped to a sand filter system for filtration. The settled sludge at the bottom is scraped by a rake mechanism, which conveys the sludge to the center cone.

Both clarifiers are provided with local control panels located near the rake motor where controls for the rake are found. The rake is a continuously operating piece of equipment, which is started locally at the panel.

Sludge Pumps

Each clarifier is equipped with a sludge pump, for pumping from the bottom of the clarifier to neutralization tank #1 or the sludge steady head tank. The sludge from the steady head tank is sent to the centrifuge for sludge/water separation.

2.4.5.2 Major Components

The major components of the primary solid liquid separation include:

- Clarifier #1 Tank – Steel Tank (1)
- Clarifier #2 Tank - Steel Tank (1)
- Clarifier #1 Sludge Pump (1)
- Clarifier #2 Sludge Pump (1)
- Clarifier #1 Rake and Drive (1)
- Clarifier #2 Rake and Drive (1)
- Local Hand Controls (2)
- Sludge Steady Head Tank – Steel Tank (1)

See Appendix C for more detailed information on pumps, equipment, piping, instrumentation, and power.

2.4.5.3 Laboratory or Onsite Testing Controls

Visual Inspection

Purpose	To verify adequate flocculation and settling of solids in the clarifier. Can also be used to determine if increased or decreased dosing of polymer is needed. Changes to polymer addition require a waiting period of approximately 30 minutes before the change will be observable.
Sampling Site	Centerwell liquid of clarifier #1, and at the deaerator on clarifier #2.
Expected Range of Results	Results are not quantified with this test. The operator or supervisor will determine whether flocculation is better or worse than before a change was made by observing the approximate and relative size of flocs and well as the presence of clear water eddies in the centerwell.
Method Reference	Not applicable
Consequences of Test Results	The operator will obtain an indication of the effects of a specific change which was made to the speed of the agitator in the flocculation tank, the point(s) of addition, or the flocculant dosage.

Paint Filter Liquids Test

Purpose	This test is used to determine the free water content in the plant sludge.
Sampling Site	Centrifuge sludge discharge #2 conveyor.
Expected Range of Results	Results are not quantified with this test. The sludge material is placed on a paint filter and if any liquid passes through and drops from the filter within the 5 minute test period, the material is deemed to contain free liquids.
Method Reference	40 CFR 264.314
Consequences of Test Results	If the test confirms the presence of free liquids, the sludge will be further processed to remove residual water.

2.4.5.4 Start-Up

Clarifiers

Following the initial start-up, the clarifiers will normally be run continuously without shut-down. The following are steps for start-up of the clarifiers.

A. Start other plant processes as described in Section 2.0.

B. Review operating manual, drawings, and maintenance manuals.

C. Familiarize operators with clarifier system.

D. Clear all debris such as loose concrete, rags, scrap metal, wood, dirt, etc., from tanks, clarifier weir, overflow tank, pipes, and pumps.

E. Check lube and oil levels in air compressor and pumps.

F. Check all valves for proper operation.

G. Partially fill clarifiers and start rakes.

H. Check filters, pipelines, airlines, pumps, and valves for leaks.

I. Finish filling clarifiers.

J. Start underflow pumps.

2.4.5.5 Normal Operation

Clarifier feed is pumped from the neutralization overflow tank, where flocculant is injected into the process stream and the flow split between clarifier #1 and clarifier #2. Approximately 100 gpm of flow is sent to clarifier #2 and 350 gpm of flow is sent to clarifier #1. The clarifier overflow is directed to the clarifier overflow tank, where anti-scalant and acid are added. Flow from the clarifier overflow tank is pumped through the sand filters. The pH of the water from the clarifier overflow tank is lowered by adding sulfuric acid into the clarifier overflow tank. The sludge from the clarifier underflows is pumped to neutralization tank #1 and the sludge steady head tank.

2.4.5.6 Alternate Operation

If one clarifier fails or requires maintenance, the other clarifier can be used as a stand alone system. Flows through the treatment plant may need to be reduced. The water from the clarifier overflow tank can be directed to bypass the sand filters to be routed back to Pit 3 when effluent water is not within specifications.

2.4.5.7 Emergency Operations and Failsafe Features

There are no emergency operations associated with the primary solid liquid separation system.

2.4.6 Effluent Filtration

Clean water overflowing from the top of the clarifiers contains small amounts of suspended solids. Therefore, the overflow is directed to two 11 foot diameter down-flow sand filtration units which remove residual particles that the clarifiers did not capture. The two filters are operated in parallel. Normally, the flow will be split evenly between both of the filters, except that when one filter is being backwashed, the total flow will be directed to the other filter. Filtrate is stored in a filter discharge tank (clearwell) to supply backwash water for the filters. Water from filter backwashing is collected in a filter backwash surge tank (mudwell) and then pumped back over time to neutralization tank #1 for processing through the treatment plant. Normal operation of the filters is manually controlled and filters are backwashed on a daily basis.

One backwash water pump is used for backwashing the sand filters. The sand filters are cleaned by reverse water flow at approximately 600 gallons per minute (gpm). An air scrubber is turned on and then the backwash water pump is started. The filter is cleaned for between 30

and 45 minutes until the backwash water is clean. An air lance is used during backwashing to breakup any clumps.

2.4.6.1 Control

The clear well contains a high level switch and alarm that sounds in the plant to indicate a high level to the operator.

The mudwell is equipped with a high level switch and alarm that sounds in the plant to indicate a high level in the tank.

The air scrubbers and backwash water pump are started and stopped manually.

2.4.6.2 Major Components

The major components of the effluent filtration system include:

- Two Filter Vessels – Steel Vessels
- Filter Discharge Tank (Clearwell) - Fiberglass Tank (1)
- Filter Backwash Surge Tank (Mudwell) - Fiberglass Tank (1)
- Backwash Water Pump (1)
- Backwash Air Compressor (1)
- Backwash Air Lance (2)
- Filter Backwash Surge Tank Transfer Pump (1)
- Level Indicator - Filter Backwash Surge Tank (1)
- Level Indicator - Filter Discharge Tank (1)

See Appendix C for more detailed information on pumps, equipment, piping, instrumentation, and power.

2.4.6.3 Laboratory or Onsite Testing Controls

There are no laboratory or onsite testing controls relevant to the operation of the sand filtration system.

2.4.6.4 Start-Up

1. Review operating manual, drawings, and maintenance manuals.
2. Familiarize operators with sand filter system.
3. Clear all debris such as loose concrete, rags, scrap metal, wood, dirt, etc., from tanks, clarifier weir and overflow tank, pipes and pumps.
4. Check lube and oil levels in air compressor and pumps.
5. Check all valves for proper operation.

6. Fill filter vessels and influent and effluent piping slowly and completely with water to minimize stress on system. Fill filter discharge tank and route water from tank to Pit 3 until the filters have been backwashed.

7. Check filters, pipelines, airlines, pumps, and valves for leaks.

8. Backwash one filter at a time using effluent water:

    a. Shut the clarifier overflow valve on the pipe to the filter being backwashed.

    b. Open influent and discharge valves to backwash pump.

    c. Start air scrubber.

    d. Start backwash pump by pressing activation button

    e. Use air lance at top of filter to mix/brake up any media clumps.

    f. Continue backwashing until backwash water has cleared up.

    g. Stop air scrubber.

    h. Approximately 5 minutes after stopping air scrubber, shut off backwash pump.

2.4.6.5 Normal Operation

Each filter should be backwashed every 24 hours when the plant is running. Backwash one filter at a time using effluent water:

A. Check that filter discharge tank is a minimum of one-half full.

B. Check that filter backwash tank is empty.

C. Shut the clarifier overflow valve on the pipe to the filter being backwashed.

D. Open influent and discharge valves to backwash pump.

E. Open valve to air scrubber.

F. Start air scrubber.

G. Start backwash pump by pressing activation button. Flow should be approximately 600 gpm.

H. Use air lance at top of filter to mix/brake up any media clumps.

I. Continue backwashing until backwash water has cleared up, typically between 30 and 45 minutes.

J. Stop air scrubber.

K. Approximately 5 minutes after stopping air scrubber, shut off backwash pump.

L. Start filter backwash surge tank transfer pump.

M. Stop filter backwash surge tank transfer pump when the tank is empty.

2.4.6.6 Alternate Operation

The sand filters may be bypassed and the overflow from the clarifiers sent back to Pit 3 upon startup or when the clarifier overflow tank water is out of specifications.

2.4.6.7 Emergency Operations and Failsafe Features

When the plant effluent pH is not within the range of 6 to 9, the effluent stream may be diverted back to Pit 3 until the pH is within discharge limits.

2.4.7 Clarifier Overflow pH Adjustment

Effluent from the clarifiers is adjusted to between pH 6 and 9 with direct injection of sulfuric acid into the clarifier overflow tank prior to entering the sand filters. In this tank, the pH of the water is adjusted to below pH 9 by reaction with sulfuric acid. The sulfuric acid is pumped from a 55 gallon plastic drum by a metering pump, which is manually controlled.

2.4.7.1 Control

Effluent from the clarifier overflow tank is adjusted for pH before being routed to the sand filters and filter discharge tank. The pH of the effluent is controlled at a target pH of 8.0 standard units via manual adjustment of the sulfuric acid metering pump.

2.4.7.2 Major Components

The major components of the final pH adjustment include:

- pH monitor and probe
- Acid metering pump
- Sulfuric acid drum – 55 gallon drum.

See Appendix C for more detailed information on pumps, equipment, piping, instrumentation, and power.

2.4.7.3 Laboratory or Onsite Testing Controls

The only laboratory testing controls required for the clarifier overflow pH adjustment is to verify the pH reading. This is done by taking a sample and comparing the inline pH measurement against the calibrated field pH meter.

2.4.7.4 Start-Up

A. Check for adequate acid level in barrel.

B. Be sure the pH meter is energized and calibrated.

C. Open acid line isolation valve.

D. Start the acid pump and adjust the speed manually until the pH is near the desired set point.

2.4.7.5 Normal Operation

Operating pH:	The normal pH set point should be between 8.0 and 8.5 and shall be less than 9.0 and greater than 6.0.
Feed Source:	66° Baume sulfuric acid in 55 gallon drum.
pH of Contents:	<0
Temperature:	33 to 60°F
Pump Settings:	Feed pump to be set at start up

2.4.7.6 Alternate Operation

There is no alternate operation for the acid system.

2.4.7.7 Emergency Operations and Failsafe Procedures

High and low pH alarms discussed in Section 2.7, Plant Effluent System, alert the operator if pH exceeds the discharge limits. Route discharge water to Pit 3 until the cause of the pH upset is determined.

2.4.8 Clarifier Overflow Anti-Scalant Addition

Effluent from the clarifiers has anti-scalant directly injected into the clarifier overflow tank prior to entering the sand filters. In this tank, the anti-scalant is added to prevent scaling of pipes, sand filters, and filter discharge tank. The anti-scalant is pumped from a 42 gallon plastic drum by a metering pump, which is manually controlled.

2.4.8.1 Control

Effluent from the clarifier overflow tank has anti-scalant added via manual adjustment of the anti-scalant metering pump.

2.4.8.2 Major Components

The major components of the final pH adjustment include:

- Anti-scalant metering pump
- Anti-scalant drum – 42 gallon drum.

See Appendix C for more detailed information on pumps, equipment, piping, instrumentation, and power.

2.4.8.3 Laboratory or Onsite Testing Controls

The only laboratory testing controls required for the clarifier overflow anti-scalant addition is to verify the proper addition rate. This is done by pumping the anti-scalant into a calibrated beaker and timing the volume.

2.4.8.4 Start-Up

A. Check for adequate anti-scalant level in barrel.

B. Open anti-scalant line isolation valve.

C. Start the anti-scalant pump and adjust the speed manually until the pumping rate is near the desired target.

2.4.8.5 Normal Operation

Operating Set point:	The normal anti-scalant set point should be at approximately 1.5 gallons per day pumping rate.
Pump Settings:	Feed pump to be set at start up

2.4.8.6 Alternate Operation

There is no alternate operation for the acid system.

2.4.8.7 Emergency Operations and Failsafe Procedures

There are no emergency operations associated with the anti-scalant operation.

2.5 Plant Effluent System

The effluent pipe from the filter discharge tank is equipped with a final effluent pH meter and flow meter.

Following final pH adjustment, the treated water is routed through the sand filters and into the clearwell before being discharged through the effluent pipe. Effluent that meets discharge limits is directed to the East Drainage.

2.5.1 Control

The pH meter has high (pH 9) and low (pH 6) alarms. The final pH is indicated locally and recorded in the control room.

2.5.2 Major Components

The major components of the plant effluent system include:

- Discharge
- Effluent pipe
- Final pH meter (1)
- Flow meter/totalizer (1)

See Appendix C for more detailed information on pumps, equipment, piping, instrumentation, and power.

2.5.3 Laboratory or Onsite Testing Controls

The WTP effluent is monitored for pH and flow. The only laboratory or onsite testing controls required for the clarifier overflow pH adjustment is to verify the pH reading. This is done by taking a sample and comparing the inline pH measurement against the calibrated field pH meter. The effluent shall be sampled and analyzed for parameters specified in Section 6.0.

LIST AND DESCRIPTION OF TESTS PERFORMED:

<u>pH of Effluent</u>

Purpose:	To verify proper operation of the inline pH probe.
Sampling Site:	Effluent sample station.
Expected Range of Results:	pH between 8.0 to 8.5 during normal operations.
Test Results:	A pH measured using the calibrated field pH meter which varies more than 0.3 pH units from the inline pH meter, indicates that the inline pH probe should be cleaned and calibrated. After calibration, verify calibration by checking the reading against two known standards.

<u>Total and Dissolved Metals</u>

Purpose:	To determine the adequacy of the treatment process in removing dissolved and suspended metals from the Pit 3 and Pit 4 feeds.
Sampling Site:	Effluent Sample Station
Method Reference:	Refer to Standard Methods for the Examination of Water and Wastewater, AWWA, for analyses methods and sampling protocol.
Test Results:	Results from AA or ICP analyses are acceptable to the EPA for performance standard compliance determination.

2.5.4 Start-Up

The following general check sequence is a one-time operation intended to ensure proper operations of all equipment. This procedure shall also be followed after extended periods of shutdown.

Check Sequence Prior to Plant Start-Up

1. Review operating manual, drawings, and maintenance manuals.
2. Clear all debris such as loose concrete, rags, scrap metal, wood, dirt, etc., from overflow tank, pipes and pumps.
3. Check oil level in pump.
4. Check all valves for proper operation.
5. Check tank, pipelines, pumps, and valves for leaks.

Start-Up Sequence

A. All equipment must be in working order.

B. Turn on the power to all the instrumentation. Clean and calibrate the pH probe.

C. Filter discharge tank should be one-half full of water.

D. Start discharge pump.

2.5.5 Normal Operation

Feed Source and Flow Rates:	Clarifier overflow tank effluent. Flow should be approximately 500 gallons per minute (gpm) and tank level should be maintained at approximately one-half full.
pH of Effluent:	8.0 to 8.5

2.5.6 Alternate Operation

The final effluent monitoring equipment may be taken out of service at any time without affecting the performance of the system. The pH may be monitored manually in the event that the pH meter fails.

The final effluent control valve is equipped with a divert valve so that the final effluent flow can be returned to Pit 3.

2.5.7 Emergency Operations and Failsafe Features

In the event the pH of the effluent water is out of specification, as determined by the final effluent pH monitor, an alarm will sound in the plant to alert the operator so that the flow may be diverted back to Pit 3. It is then the responsibility of the operator to rectify the pH problem.

2.6 Sludge Handling Facilities

The water treatment plant (WTP) produces a semi-solid sludge that is disposed offsite. The sludge is currently hauled to DMC's Ford millsite for disposal in a lined tailings pond (TDA-4) in accordance with the Residual Management Plan included in Appendix B. If the disposal location changes Appendix B will be updated to reflect the changed disposal option. This plan will also be updated to address any operational or physical WTP changes that are necessary for the final disposal option.

The WTP sludge handling facilities include the following:

- Sludge Dewatering
- Sludge Transport
- Final Disposal

2.6.1 Sludge Dewatering

Sludge from the clarifier #1 is fed to a steady head tank and pumped to the centrifuge(s) for dewatering and final removal from the system.

The liquid discharge (centrate) is pumped back to the neutralization surge tank, and the sludge discharge disposed as described in Section 2.8,Sludge Transport and Final Disposal.

Sludge dewatering follows primary solid liquid separation in the clarifiers. After the sludge is filtered and discharged from the centrifuges as a solid cake, it will be containerized and transported to the disposal area.

2.6.1.1 Control

Sludge is delivered to the centrifuges using Moyno progressive cavity pumps. The speed of the progressive cavity pumps are regulated by the speed of the centrifuge back drive. The centrifuges and progressive cavity pumps are manually started and stopped by the operator.

2.6.1.2 Major Components

The major components of the sludge dewatering system include:

- Two Centrifuges
- Centrifuge Feed Pumps (2)
- Discharge Conveyor (1)
- Centrate Surge Tank – Steel Tank (1)

See Appendix C for more detailed information on pumps, equipment, piping, instrumentation, and power.

2.6.1.3 Laboratory or Onsite Testing Controls

Paint Filter Liquids Test

Purpose	This test is used to determine the free water content in the plant sludge.
Sampling Site	Centrifuge sludge discharge conveyor #2.
Expected Range of Results	Results are not quantified with this test. The sludge material is placed on a paint filter and if any liquid passes through and drops from the filter within the 5 minute test period, the material is deemed to contain free liquids.
Method Reference	40 CFR 264.314
Consequences of Test Results	If the test confirms the presence of free liquids, the sludge will be further processed to remove residual water.

2.6.1.4 Start-Up

For more details of the centrifuge startup and operation, please refer to the Sharples operating manual. The Sharples operating manual is stored in the WTP control room. The following sequence shall be followed when starting the sludge dewatering system:

1. Inspect truck shed for obstructions around conveyor. Verify that sludge haul truck bed is down. Put truck power take off into neutral.
2. Back sludge haul truck under conveyor.
3. Check oil level in pumps.
4. Push start button for centrifuge.
5. Push start button for backdrive.
6. Push start button for conveyor.
7. After centrate surge tank has filled, start centrate pump.

2.6.1.5 Normal Operation

During normal operations, once the system is stable, the plant will run 24 hours per day and centrifuges will operate continuously for 15 hours daily. After shutdown of the centrifuges, rinse the centrifuges with water. After the sludge truck has been loaded, pull the truck out and hose down the truck bay. The daily sludge output is approximately 12 tons per day and is transported and disposed as described in the Residual Management Plan (Miller Geotechnical Consultants, 2009).

2.6.1.6 Alternate Operation

Sludge dewatering can be accomplished in one unit without adverse effects to the plant operation.

2.6.1.7 Emergency Operations and Failsafe Features

There are no emergency operations associated with the sludge dewatering system. Emergency stop cables run along the sludge conveyor. The centrifuges are equipped with vibration sensors that will shut off the centrifuges if excessive vibration is occurring.

2.7 Sludge Transport and Final Disposal

Currently the cake from the centrifuge discharges on to a conveyor which fills a truck. Once the centrifuge operation is complete for the day, the operator cleans up the area. After the floor and surrounding area is clean, the operator will sample the filtered sludge for free water. If there is no free water the truck is covered and the sludge is hauled to DMC's Ford millsite for disposal in a lined tailings pond (TDA-4) in accordance with the Residual Management Plan included in Appendix B. If the disposal location changes Appendix B will be updated to reflect the changed disposal option. This plan will also be updated to address any operational or physical WTP changes that are necessary for the final disposal option. The final Residuals Transportation Plan addresses transport of the sludge (Tetra Tech, 2009d).

3.0 TROUBLESHOOTING AND COMMON OPERATING PROBLEMS FOR WATER TREATMENT FACILITIES

The water collection system and treatment facilities most common operating problems are detailed in this section. Table 3-1 summarizes the potential operating issues and corresponding sections for the following systems:

- Water Collection and Conveyance System
- Raw Water System
- Neutralization and Precipitation System
- Lime Slurry System
- Flocculant Addition System
- Primary Solid Liquid Separation
- Clarifier Overflow pH Adjustment System
- Effluent Filtration System
- Plant Effluent System
- Sludge Dewatering System

Table 3-1. Troubleshooting Reference

System	Section	Description of Problem
Water Collection and Conveyance System – Section 3.1		
Outfall 001 – Section 3.1.1	3.1.1-1	Reduced or lack of flow
	3.1.1-2	Pumps will not start
	3.1.1-3	High power requirements, excess noise, intermittent feed, etc.
Outfall 002 – Section 3.1.2	3.1.2-1	Reduced or lack of flow
	3.1.2-2	Pumps will not start
	3.1.2-3	High power requirements, excess noise, intermittent feed, etc.
Outfall 003 – Section 3.1.3	3.1.3-1	Reduced or lack of flow
	3.1.3-2	Pumps will not start
	3.1.3-3	High power requirements, excess noise, intermittent feed, etc.
Outfall 004 – Section 3.1.4	3.1.4-1	Reduced or lack of flow
	3.1.4-2	Pumps will not start
	3.1.4-3	High power requirements, excess noise, intermittent feed, etc.
Pollution Control Pond – Section 3.1.5	3.1.5-1	Reduced or lack of flow
	3.1.5-2	Pumps will not start
	3.1.5-3	High power requirements, excess noise, intermittent feed, etc.
Raw Water System – Section 3.2		
Piping and Valves	3.2-1	Reduced or lack of flow
	3.2-2	Excessive delay (greater than 5 minutes) for flow to reach plant after starting pumps
Feed Pumps from Pit 3 and Pit 4	3.2-1	Feed pumps will not start
	3.2-2	High power requirements, excess noise, intermittent feed, etc.
Neutralization and Precipitation System – Section 3.3		
Neutralization Tank #1	3.3-1	Low or no barium chloride flow
	3.3-2	Low or no recycled sludge flow
	3.3-3	Low gravity flow to tank #2

Table 3-1. Troubleshooting Reference (continued)

System	Section	Description of Problem
Neutralization Tanks #2 and #3	3.3-4	Low pH in tank (less than 9.9 in tank #2 and 9.85 in tank #3)
	3.3-5	High pH in tank (Greater than 10.5)
	3.3-6	The pH indicated at the local station does not match the pH of the sample manually measured
	3.3-7	Excess foam in neutralization tanks
Neutralization Surge Tank	3.3-8	High level alarm sounds
Lime Slurry System – Section 3.4		
Lime Slurry System	3.4-1	Large clumps of unmixed lime are appearing in tank #2 or the lime slurry tank. These clumps may be clogging the lime slurry pump.
	3.4-2	Reduced rate of discharge at the lime slurry pumps. An inadequate amount of lime slurry is supplied to tank #2. The pH of the neutralization tank #2 and #3 may be below 9.8.
	3.4-3	The liquid in the lime slurry tank is mostly water. The pH of the neutralization tanks may be low.
	3.4-4	General troubleshooting
Flocculant Addition System – Section 3.5		
Flocculant Addition System	3.5-1	The liquid flocculant concentration which is transferred from the mix tank to the storage contains large clumps of wetted flocculant (or “fish-eyes”)
	3.5-2A	Lack of flocculant
	3.5-2B	Failure of flocculant transfer or feed pumps
	3.5-3	General troubleshooting
	3.1.10-2	General troubleshooting
Primary Solid Liquid Separation System – Section 3.6		
Clarifiers	3.6-1	The turbidity of the thickener effluent is too high. The effluent may appear red, brown, or gray
	3.6-2	The rake torque is too high
	3.6-3	The density of the clarifier underflow (recycled sludge) is too low
	3.6-4	The density of the clarifier underflow is too high
	3.6-5	The rake does not turn
	3.6-6	The liquid in the clarifier overflows the outer walls of the weir
	3.6-7	The sludge pumps will not start
	3.6-8	Reduced rate of discharge from the sludge pumps
	3.6-9	The sludge level is too high in a clarifier
	3.6-10	General troubleshooting
Clarifier Overflow pH Adjustment System – Section 3.7		
Clarifier Overflow pH Adjustment System	3.7-1	pH is too low (<6) or too high (>9)
	3.7-2	General troubleshooting
Effluent Filtration System – Section 3.8		
Effluent Filtration System	3.8-1	Abnormal or turbid effluent quality
	3.8-2	General Troubleshooting
Plant Effluent System – Section 3.9		
Plant Effluent System	3.9-1	pH is too low (<6) or too high (>9)
	3.9-2	Filter discharge tank is overflowing or no discharge to the East Drainage
Sludge Dewatering System – Section 3.10		
Sludge Dewatering System	3.10-1	Centrifuge does not start
	3.10-2	No solids or low solids produced
	3.10-3	General troubleshooting

3.1 Seep and Surface Water Collection System

3.1.1 Common Operating Problems for Outfall 001

1. **Description of Problem**: Reduced or lack of flow.

   Probable Causes and Control Techniques

   A. Check that discharge valve from pump is open.

   B. Piping has debris, scale, or ice causing plugging. Remedy: verify line pressure at pump discharge with a pressure gauge. A high discharge indicates that line blockage is possible and the blockage should be removed. Clean debris/scale/ice from inside of piping. If pieces of pump lining are found, the pump shall be repaired. A low discharge pressure indicates that a blockage is not a probable cause and the remaining causes and control techniques discussed in this section should be followed.

   C. Piping is leaking or ruptured. Remedy: repair leak or rupture.

   D. Damage to pump impeller or housing. Remedy: verify integrity of housing and impeller. Repair and replace as necessary.

   E. Submersible pump impellors not turning. Remedy: verify that motor starts. If motor starts, check splines on shaft between motor and impellors. If motor does not start, electricians should verify proper power input and motor operation.

   F. Centrifugal pump impeller out of adjustment. Remedy: Adjust impeller according to manufacturer's instructions.

2. **Description of Problem**: Pumps will not start.

   Probable Causes and Control Techniques

   A. Float switches have failed or moved from their set point. Remedy: check float switch activation point versus tank level and adjust height. If the float switch still does not operate correctly, the responder will manually operate the pumps until the float switch can be repaired or replaced by a qualified electrician.

   B. Circuit breaker for pump is tripped at pump station. Remedy: verify that no maintenance or repair work is in progress. Verify that the breaker is not locked in the OFF position. Change the breaker switch to the ON position. If breaker is in the ON position and the pump is not operating, electricians should verify proper power input and motor operation. Repair or replace motor and/or pump as necessary.

3. **Description of Problem**: High power requirements, excess noise, intermittent feed, etc.

   Probable Causes and Control Techniques

   A. Refer to manufacturer's manual for troubleshooting.

3.1.2 Common Operating Problems for Outfall 002

1. **Description of Problem:** Reduced or lack of flow.

   Probable Causes and Control Techniques

   A. Check that discharge valve from pump is open.

   B. Piping has debris, scale, or ice causing plugging. Remedy: verify line pressure at pump discharge with a pressure gauge. A high discharge indicates that line blockage is possible and the blockage should be removed. Clean debris/scale/ice from inside of piping. If pieces of pump lining are found, the pump shall be repaired. A low discharge pressure indicates that a blockage is not a probable cause and the remaining causes and control techniques discussed in this section should be followed.

   C. Piping is leaking or ruptured. Remedy: repair leak or rupture.

   D. Damage to pump impeller or housing. Remedy: verify integrity of housing and impeller. Repair and replace as necessary.

   E. Submersible pump impellors not turning. Remedy: verify that motor starts. If motor starts, check splines on shaft between motor and impellors. If motor does not start, electricians should verify proper power input and motor operation.

2. **Description of Problem:** Pumps will not start.

   Probable Causes and Control Techniques

   A. Float switches have failed or moved from their set point. Remedy: check float switch activation point versus tank level and adjust height. If the float switch still does not operate correctly, the responder will manually operate the pumps until the float switch can be repaired or replaced by a qualified electrician.

   B. Circuit breaker for pump is tripped at pump station. Remedy: verify that no maintenance or repair work is in progress. Verify that the breaker is not locked in the OFF position. Change the breaker switch to the ON position. If breaker is in the ON position and the pump is not operating, electricians should verify proper power input and motor operation. Repair or replace motor and/or pump as necessary.

3. **Description of Problem:** High power requirements, excess noise, intermittent feed, etc.

   Probable Causes and Control Techniques

   A. Refer to manufacturer's manual for troubleshooting.

3.1.3 Common Operating Problems for Outfall 003

1. **Description of Problem:** Reduced or lack of flow.

Probable Causes and Control Techniques

A. Check that discharge valve from pump is open.

B. Piping has debris, scale, or ice causing plugging. Remedy: verify line pressure at pump discharge with a pressure gauge. A high discharge indicates that line blockage is possible and the blockage should be removed. Clean debris/scale/ice from inside of piping. If pieces of pump lining are found, the pump shall be repaired. A low discharge pressure indicates that a blockage is not a probable cause and the remaining causes and control techniques discussed in this section should be followed.

C. Piping is leaking or ruptured. Remedy: repair leak or rupture.

D. Damage to pump impeller or housing. Remedy: verify integrity of housing and impeller. Repair and replace as necessary.

E. Submersible pump impellors not turning. Remedy: verify that motor starts. If motor starts, check splines on shaft between motor and impellors. If motor does not start, electricians should verify proper power input and motor operation.

2. **Description of Problem:** Pumps will not start.

Probable Causes and Control Techniques

A. Float switches have failed or moved from their set point. Remedy: check float switch activation point versus tank level and adjust height. If the float switch still does not operate correctly, the responder will manually operate the pumps until the float switch can be repaired or replaced by a qualified electrician.

B. Circuit breaker for pump is tripped at pump station. Remedy: verify that no maintenance or repair work is in progress. Verify that the breaker is not locked in the OFF position. Change the breaker switch to the ON position. If breaker is in the ON position and the pump is not operating, electricians should verify proper power input and motor operation. Repair or replace motor and/or pump as necessary.

3. **Description of Problem:** High power requirements, excess noise, intermittent feed, etc.

Probable Causes and Control Techniques

A. Refer to manufacturer's manual for troubleshooting.

3.1.4 Common Operating Problems for Outfall 004

1. **Description of Problem:** Reduced or lack of flow.

   Probable Causes and Control Techniques

   A. Check that discharge valve from pump is open.

   B. Piping has debris, scale, or ice causing plugging. Remedy: verify line pressure at pump discharge with a pressure gauge. A high discharge indicates that line blockage is possible and the blockage should be removed. Clean debris/scale/ice from inside of piping. If pieces of pump lining are found, the pump shall be repaired. A low discharge pressure indicates that a blockage is not a probable cause and the remaining causes and control techniques discussed in this section should be followed.

   C. Piping is leaking or ruptured. Remedy: repair leak or rupture.

   D. Damage to pump impeller or housing. Remedy: verify integrity of housing and impeller. Repair and replace as necessary.

   E. Submersible pump impellors not turning. Remedy: verify that motor starts. If motor starts, check splines on shaft between motor and impellors. If motor does not start, electricians should verify proper power input and motor operation.

2. **Description of Problem:** Pumps will not start.

   Probable Causes and Control Techniques

   A. Float switches have failed or moved from their set point. Remedy: check float switch activation point versus tank level and adjust height. If the float switch still does not operate correctly, the responder will manually operate the pumps until the float switch can be repaired or replaced by a qualified electrician.

   B. Circuit breaker for pump is tripped at pump station. Remedy: verify that no maintenance or repair work is in progress. Verify that the breaker is not locked in the OFF position. Change the breaker switch to the ON position. If breaker is in the ON position and the pump is not operating, electricians should verify proper power input and motor operation. Repair or replace motor and/or pump as necessary.

3. **Description of Problem:** High power requirements, excess noise, intermittent feed, etc.

   Probable Causes and Control Techniques

   A. Refer to manufacturer's manual for troubleshooting.

3.1.5 Common Operating Problems for the Pollution Control Pond

1. **Description of Problem**: Reduced or lack of flow.

   Probable Causes and Control Techniques

   A. Check that discharge valve from pump is open.

   B. Piping has debris, scale, or ice causing plugging. Remedy: verify line pressure at pump discharge with a pressure gauge. A high discharge indicates that line blockage is possible and the blockage should be removed. Clean debris/scale/ice from inside of piping. If pieces of pump lining are found, the pump shall be repaired. A low discharge pressure indicates that a blockage is not a probable cause and the remaining causes and control techniques discussed in this section should be followed.

   C. Piping is leaking or ruptured. Remedy: repair leak or rupture.

   D. Damage to pump impeller or housing. Remedy: verify integrity of housing and impeller. Repair and replace as necessary.

   E. Submersible pump impellors not turning. Remedy: verify that motor starts. If motor starts check splines on shaft between motor and impellors. If motor does not start, electricians should verify proper power input and motor operation.

   F. Centrifugal pump impeller out of adjustment. Remedy: Adjust impeller according to manufacturer's instructions.

2. **Description of Problem:** Pumps will not start.

   Probable Causes and Control Techniques

   A. Circuit breaker for pump is tripped at pump station. Remedy: verify that no maintenance or repair work is in progress. Verify that the breaker is not locked in the OFF position. Change the breaker switch to the ON position. If breaker is in the ON position and the pump is not operating, electricians should verify proper power input and motor operation. Repair or replace motor and/or pump as necessary.

3. **Description of Problem:** High power requirements, excess noise, intermittent feed, etc.

   Probable Causes and Control Techniques

   A. Refer to manufacturer's manual for troubleshooting.

3.2 Common Operating Problems for the Raw Water Supply System

Raw Water System Piping and Valves

1. **Description of Problem**: Reduced or lack of flow.

   Probable Causes and Control Techniques

   A. Piping has debris, scale, or ice causing plugging. Remedy: verify line pressure at pump discharge. A high discharge pressure indicates that line blockage is possible and the blockage should be removed. Clean debris/scale/ice from inside of piping. If pieces of pump lining are found, the pump shall be repaired. A low discharge pressure indicates that a blockage is not a probable cause and the remaining causes and control techniques discussed in this section should be followed.

   B. Piping is leaking or ruptured. Remedy: repair leak or rupture.

   C. Suction piping is out of water in pit. Remedy: move suction piping so it is submerged.

   D. Flow meter is reading incorrectly. Remedy: repair or replace flow meter.

   E. Mechanical or electrical failure of pumps. Refer to following sections.

   F. Flow control valve is partially closed. Remedy: manually open control valve to allow desired flow to pass.

   G. Set-point for flow control valve is set too low. Remedy: verify set-point value and change if necessary.

2. **Description of Problem**: Excessive delay (greater than 5 minutes) for flow to reach plant after starting pumps.

   Probable Causes and Control Techniques

   A. Piping check valves are leaking. Remedy: clean debris/scale from inside of valves or replace check valves.

Feed Pumps from Pit 3 and Pit 4

1. **Description of Problem**: Feed pumps will not start.

   Probable Causes and Control Techniques

   A. Fuel to Pit 4 pump motor is empty. Remedy: fill tank with fuel.

   B. Circuit breaker for Pit 3 pump is tripped at treatment plant. Remedy: verify that no maintenance or repair work is in progress. Verify that the breaker is not locked in the OFF position. Change the breaker switch to the ON position. Start the pump according to the startup procedure.

C. Pump or motor mechanical or electrical failure. Refer to manufacturer's manual for troubleshooting.

2. **Description of Problem**: High power requirements, excess noise, intermittent feed, etc.

Probable Causes and Control Techniques

A. Refer to manufacturer's manual for troubleshooting.

3.3 Common Operating Problems Neutralization and Precipitation

1. **Description of Problem**: Low or no barium chloride flow – Neutralization Tank #1.

Probable Causes and Control Techniques:

A. Verify the level of $BaCl_2$ solution in the $BaCl_2$ storage tank. Verify proper operation of the chemical metering pump.

2. **Description of Problem**: Low or no recycled sludge flow – Neutralization Tank #1.

Probable Causes and Control Techniques:

A. Suction lines to pumps, or discharge lines from pumps are plugged with sludge or debris. Remedy: clean out lines.

B. Clarifier Underflow Pump #2

1. Circuit breaker for pump is tripped at plant. Remedy: verify that no maintenance or repair work is in progress. Verify that the breaker is not locked in the OFF position. Change the breaker switch to the ON position. Start the pump according to start-up procedures.

2. Mechanical or electrical failure of the clarifier pump. Refer to manufacturer's manual for trouble shooting.

C. Clarifier Underflow Pump #1

1. Air line to pump is leaking. Remedy: fix airline leak.

2. Circuit breaker for air compressor for clarifier pump #1 tripped at plant. Remedy: Verify that no maintenance or repair work is in progress. Verify that the breaker is not locked in the OFF position. Change the breaker switch to the ON position. Start the air compressor according to start-up procedures.

3. Mechanical failure of the clarifier pump. Refer to manufacturer's manual for trouble shooting.

3. **Description of Problem**: Low gravity flow to tank #2 – Neutralization Tank #1.

   Probable Causes and Control Techniques:

   A. Blockage of the upcomer or overflow pipe has occurred due to solids buildup resulting in water overflow from neutralization tank #1. Remedy: remove the blockage and examine its character. Blockages due to solids buildup may indicate inadequate agitation or excessive sludge recycle. Verify the proper agitator operation and proper operation of the feed pumps from the clarifiers.

   B. Pit 3 flow problem. Remedy: verify flowrate from Pit 3 pump in not greater than 450 gpm.

4. **Description of Problem**: Low pH in tank (less than 9.9 in tank #2 and 9.85 in tank #3) - Neutralization Tanks #2 and #3

   Probable Causes and Control Techniques:

   A. pH meter is not reading correctly. Remedy: Visually inspect the probe for breakage. Clean probe and calibrate. After calibration, verify calibration by checking the reading against two known standards. Record the calibration slope and check that it is within manufacturer specifications.

   B. Lime slurry feed inadequate or has a low concentration of lime. Remedy: See Section 2.5.2 Lime Slurry System.

5. **Description of Problem**: High pH in tank (Greater than 10.5) - Neutralization Tanks #2 and #3

   Probable Causes and Control Techniques:

   A. pH meter is not reading correctly. Remedy: visually inspect the probe for breakage. Clean probe and calibrate. After calibration, verify calibration by checking the reading against two known standards.

   B. Lime slurry feed rate is too high. Remedy: reduce the feed rate of the lime pump by partially closing the valve feeding tank #2.

6. **Description of Problem**: The pH indicated at the local station does not match the pH of the sample manually measured - Neutralization Tanks #2 and #3

   Probable Causes and Control Techniques:

   A. pH meter is not reading correctly. Remedy: visually inspect the probe for breakage. Clean probe and calibrate. After calibration, verify calibration by checking the reading against two known standards.

7. **Description of Problem**: Excess foam in neutralization tanks - Neutralization Tanks #2 and #3.

   Probable Causes and Control Techniques:

   A. Some foaming is normal due to flocculant which is recirculated into the agitated tanks from the clarifiers. Excess foaming is not detrimental to the process, but it may indicate that flocculant is being wasted. Remedy: verify that flocculant dosage is correct for the feed flows which exist.

8. **Description of Problem**: High level alarm sounds – Neutralization Surge Tank.

   Probable Causes and Control Techniques:

   A. The inlet or outlet valves of the clarifier feed pump are closed or partially closed. Remedy: verify the valve position and open completely as necessary.

   B. Piping to or from the clarifier feed pump has scaling. Remedy: clean or replace piping.

   C. Failure of clarifier feed pump. Remedy: verify that the clarifier feed pump is in operation. If not, check breaker switch position and power switch position. If both are in the ON position and the pump is not operating, electricians should verify proper power input and pump operation. Repair pump as necessary.

3.4 Common Operating Problems for the Lime Slurry System

1. **Description of the Problem:** Large clumps of unmixed lime are appearing in tank #2 or the lime slurry tank. These clumps may be clogging the lime slurry pump.

   Probable Causes and Control Techniques

   A. This could be due to inadequate mixing in tank #2 or lime slurry tanks or to water leaks into the storage silo. Remedy: observe lime addition to the tanks. It is possible that large clumps may be prevented by purchasing lime from another supplier or by ensuring that there are no water leaks into the lime silo. Verify that the mixer is operating properly and consistently. If a mixer stops often due to overheating, blockages are likely to result. Check for proper power supply and electrical operation of the motor.

2. **Description of Problem:** Reduced rate of discharge at the lime slurry pumps. An inadequate amount of lime slurry is supplied to tank #2. The pH of the Neutralization tank #2 and tank #3 may be below 9.8.

   Probable Causes and Control Techniques

   A. Lack of lime slurry.

      1. The inlet valve of the slurry pump is closed or partially closed. Remedy: verify the valve position and open as necessary.

2. The discharge valve of the slurry pump is closed or partially closed. Remedy: verify valve position and open as necessary.

3. Verify the level of the lime slurry tank. Mix a new slurry batch if tank is empty or low. Verify that adequate lime and makeup water are entering the tank during mixing. Verify proper water addition if the tank is filled with dry lime or thick paste.

4. Suction line to pump, or discharge line from pump, is plugged with lime. Remedy: check to see if lime return line is flowing. Visually verify flow of lime slurry into tank #2. Lack of return flow and/or flow into tank #2 indicates a line blockage when the slurry pump is operational and slurry exists in the slurry tank. If return line is flowing and hand valves are open, then clean out line from tee on return line to tank #2. If return line is not flowing and hand valves are open, then disconnect return line at pump and verify that pump is pumping. If pump is working then clean out return line, if pump is not pumping, then clean out suction line.

5. Failure of lime slurry pump. Remedy: verify that the lime slurry pump is in operation. If not, check breaker switch position and power switch position. If both are in the ON position and the pump is not operating, electricians should verify proper power input and pump operation. Repair pump as necessary.

3. **Description of Problem:** The liquid in the lime slurry tank is mostly water. The pH of the neutralization tanks may be low.

Probable Causes and Control Techniques

A. Lack of hydrated lime in the silo. Remedy: verify silo level and refill if necessary.

B. Bridging in the lime silo. Bridging is a condition where hydrated lime clings to the sides of the silo and forms a bridge across the silo. A void will then exist over the screw feeder. This void prevents lime from being transferred into the lime slurry tank. Remedy: if possible, visually verify entry of hydrated lime into the lime slurry tank. Lack of entry indicates a possible bridging condition. Verify proper operation of the bin activator (vibrator). If the activator has cycled OFF, place in manual mode and initiate vibration until powdered lime is observed entering the slurry tank.

C. The silo screw feeder is jammed. Since the quality of hydrated lime will vary from truck to truck, it is possible that hard clumps or rocks will jam the screw, stopping lime transfer. Remedy: verify that the motor shaft and the screw drive shaft are both turning. If neither is turning, verify that the breaker switch is in the ON position and that there is no maintenance work in progress. Verify that the local switch is in the MANUAL ON position. Blockages can sometimes be removed by “bumping” the power to the screw feeder motor; that is, to turn the motor OFF then ON for a few seconds each. If the motor rotates slightly each time before binding again, it will be necessary to access the screw housing and remove the blockage. Proper electrical lock-out/tag-out procedures must be followed.

D. The silo screw shaft has uncoupled from the screw drive motor. Remedy: check to see if both the drive motor shaft and the screw shaft are turning. Verify integrity of the coupling, including tightness of set screws. Repair or tighten set screws as necessary.

E. Failure of the drive motor to the screw feeder. Remedy: verify that the breaker switch and power switch are both ON. Attempt to "bump" the power to the motor. If there is not a slight rotation of the motor shaft, an electrical failure is possible. Electricians should verify proper power input and motor operation. Replace motor if necessary.

4. **Description of the Problem:** General Troubleshooting.

Probable Causes and Control Techniques

A. See manufacturer's operation and maintenance manual for additional information.

3.5 Common Operating Problems for the Flocculant Addition System

1. **Description of Problem:** The liquid flocculant concentration which is transferred from the mix tank to the storage contains large clumps of wetted flocculant (or "fish-eyes").

Probable Causes and Control Techniques

A. The mixing time in the flocculant mixing tanks is too low. Remedy: increase the mixing time for the flocculant.

2. **Description of the Problem**

Probable Causes and Control Techniques

A. Lack of Flocculant. Remedy: verify the level in the flocculant tank. Verify that adequate process water is entering the tank during mixing.

B. Failure of the flocculant transfer or feed pumps. Remedy: verify that the pump is in operation. If not, check breaker switch position and power switch position. If both are in the ON position and the pump is not operating, electricians should verify proper power input and pump operation. Repair pump as necessary.

3. **Description of Problem:** General troubleshooting.

Probable Causes and Control Techniques

A. See manufacturer's operation and maintenance manual for additional details.

3.6 Common Operating Problems for the Primary Solid Liquid Separation System

Clarifiers

1. **Description of Problem:** The turbidity of the thickener effluent is too high. The effluent may appear red, brown, or gray.

   Probable Causes and Control Techniques:

   A. Flocculation is not adequate. There are several ways to improve flocculation:

      1. Verify that a flocculant dosage pump is running and there is adequate supply of flocculant solution in the storage tank. Verify that the flocculant feed system is working properly.

      2. Increase flocculant dosage. If higher dosages are required, it is possible that the agitation in the flocculation tank or mixing time in the flocculation make-up tank is not adequate.

      3. Change the addition point(s) of the mixed flocculant solution to the clarifiers. Detrimental effects may be seen with either too much retention time or too little. Generally, the operator should increase the retention time as a first trial by adding the flocculant flow into the treatment stream as far in front of the clarifiers as practical. The clarifiers will not respond quickly to any of these changes, so the operator should observe effects over a six to twelve hour period before proceeding with other changes.

      4. Increase the mixing time of the flocculant makeup tank to provide for a higher efficiency of the polymer chains.

      5. Decrease the makeup concentration in the flocculant mix tank. Generally, flocculant is most efficient in the 0.2% to 0.6% range, although efficient concentrations below 0.2% are also possible.

      6. Increase the flow rate of flocculant dilution water. The normal range of dilution is from 5 to 10 times the flow rate of undiluted flocculant concentrate.

      7. Use flocculant pumps that do not sheer the polymer chains such as progressive cavity pumps.

2. **Description of Problem:** The rake torque is high.

   Probable Causes and Control Techniques:

   A. The sludge in the clarifier is too dense. Remedy: pump some of the sludge to tank #1 or the sludge steady head tank until the solids content of the sludge is reduced. In unusual cases, the sludge may be so dense that the rakes will not push the sludge to the center or the sludge will plug off the suction side of the pump. In this case the clarifier may need to be drained and sludge washed out with high pressure water.

   B. There is too much sludge in the thickener, although the sludge may contain less than 30% solids. This may occur due to changes in influent water chemistry, incorrect pH readings which lead to excessive lime feed, or too long a duration between centrifuge runs. Remedy: check the pH meter and probe in neutralization tank #1 to verify that lime is not being overfed. The torque may be reduced by pumping some of the sludge to tank #1 or the steady head tank to reduce the total volume of sludge in the clarifier. If the high flow, high loading condition exists, the sludge recycle should be set at the maximum possible flow rate and the centrifuge shall be operated more frequently.

   C. The rake is dragging an object along the bottom in the clarifier. Remedy: this is somewhat difficult to verify; however, the object must be removed to prevent damage to the rake by cleaning out the clarifier.

3. **Description of Problem:** The density of the clarifier underflow (recycled sludge) is too low.

   Probable Causes and Control Techniques:

   A. There is not enough sludge recycle flow to tank #1 during normal operations. Remedy: adjust the sludge recycle rate.

   B. During the initial start-up of the plant or after the clarifier has been emptied of sludge, some time will be required before the sludge volume builds up and begins to increase in density. During these periods, the maximum amount of recycled sludge possible is likely to be less than during normal operations. All that is required is time for the sludge inventory to restore itself.

   C. The sludge in the clarifier is too dense. Remedy: pump some of the sludge to tank #1 or the sludge steady head tank until the solids content of the sludge is reduced. In unusual cases, the sludge may be so dense that the rakes will not push the sludge to the center or the sludge will plug off the suction side of the pump. In this case the clarifier may need to be drained and sludge washed out with high pressure water.

4. **Description of Problem:** The density of the clarifier underflow is too high.

   Probable Causes and Control Techniques:

   A. The procedure was not initiated to send sludge to tank #1 or the steady head tank. Remedy: begin pumping sludge to tank #1 or the steady head tank. During dewatering, the density of the recycled sludge will decrease as sludge is fed to the centrifuge. Also see the remedy for high rake torque discussed above.

5. **Description of Problem:** The rake does not turn.

   Probable Causes and Control Techniques:

   A. Hand switch for rake drive is off. Remedy: turn on hand switch.

   B. Torque limit switch is engaged or failed. Remedy: lift rakes to remove torque. Replace limit switch.

   C. Incorrect signals from the rake drive. Remedy: electricians should verify proper input and output signals from the drive motors.

   D. Failure of rake drive motor. Remedy: verify if the shear pin has been broken, if the motor has burned out, or if the motor has been shut down at the local station or the breaker switch. Check breaker switch position and power switch position. If both are in the ON position and the motor is not operating, electricians should verify proper power input and motor operation. Repair or reset the switches as necessary.

   E. Failure of gear reducer. Remedy: remove gear reducer and operate by hand to check for ease of movement. Replace if reducer is locked up.

   F. Failure of pinion shaft bearing. Remedy: remove gear reducer and check lower bearing.

   G. Refer to the manufacturer's manual for other troubleshooting.

6. **Description of Problem:** The liquid in the clarifier overflows the outer walls of the weir.

   Probable Causes and Control Techniques:

   A. Too much water is being fed to the clarifier. Remedy: reduce flow to the clarifier.

   B. There is an obstruction or scale buildup in the discharge pipe of the clarifier. Remedy: remove the blockage or scale.

7. **Description of Problem:** The sludge pumps will not start.

   Probable Causes and Control Techniques:

   A. Circuit breaker is thrown in the control room. Remedy: verify that no maintenance or repair work is in progress. Verify that the breaker is not locked in the OFF position. Change the breaker switch to the ON position. Start the pump according to the start-up procedures. If the pump still does not start, repair as necessary.

   B. Mechanical or electrical failure of the pump or motor. Remedy: electricians should verify proper operation of the drive motor. Mechanics should verify proper pump operation. Repair or replace as necessary.

8. **Description of Problem:** Reduced rate of discharge from the sludge pumps.

   Probable Causes and Control Techniques:

   A. Discharge valve partially closed. Remedy: open valve at pump.

   B. Pump inlet valve is partially closed. Remedy: open inlet valve at pump.

   C. The sludge in the clarifier is too dense. Remedy: pump some of the sludge to tank #1 or the sludge steady head tank until the solids content of the sludge is reduced. In unusual cases, the sludge may be so dense that the rakes will not push the sludge to the center or the sludge will plug off the suction side of the pump. In this case the clarifier may need to be drained and sludge washed out with high pressure water.

   D. Line blockage by trash or dense sludge. Remedy: verify line pressure at pump discharge at the local gauge. A high discharge pressure indicates that line blockage is possible and the blockage should be removed. A low discharge pressure indicates that a blockage is not a probable cause.

   E. Damage neutralization tank #1 feed pump impeller or housing. Remedy: verify integrity of housing and impeller. Repair and replace as necessary.

   F. Damage to clarifier #1 underflow pump. Remedy: verify integrity of pump housing, check balls, seats, diaphragm and o-rings. Repair and replace as necessary.

   G. Impeller out of adjustment. Remedy: Adjust impeller according to manufacturer's instructions.

9. **Description of Problem:** The sludge level is too high in a clarifier.

   Probable Causes and Control Techniques:

   See the remedy for high rake torque discussed above.

10. **Description of Problem:** General troubleshooting.

    Probable Causes and Control Techniques:

    A. See manufacturer's operation and maintenance manual for additional information.

3.7 Common Operating Problems for the Clarifier Overflow pH Adjustment System

1. **Description of Problem:** pH is too low (<6) or too high (>9).

   Probable Causes and Control Techniques

   A. pH is low:

      - The acid pump is pumping at too high a rate. Remedy: manually slow down the pump speed or stroke.

      - pH meter is not reading correctly. Remedy: visually inspect the probe for breakage. Clean probe and calibrate. After calibration, verify calibration by checking the reading against two known standards.

   B. pH is high:

      - The acid pump is pumping at a low a rate. Remedy: manually increase the pump speed or stroke. Check that pump has not lost suction.

      - Acid drum is empty or low. Remedy: replace acid drum with full drum.

      - Failure of acid metering pump. Remedy: verify that the acid pump is in operation. If not, check breaker switch position and power switch position. If both are in the ON position and the pump is not operating, electricians should verify proper power input and pump operation. Repair or replace pump as necessary.

      - Acid is pumping but not changing the pH of the water. Check acid lines for leaks or rupture. Check acid injector for plugging. Check that acid concentration is correct (i.e., 66 baume or 93%).

      - pH meter is not reading correctly. Remedy: visually inspect the probe for breakage. Clean probe and calibrate. After calibration, verify calibration by checking the reading against two known standards

2. **Description of Problem:** General troubleshooting.

   Probable Causes and Control Techniques:

   A. See manufacturer's operation and maintenance manual for additional information.

3.8 Common Operating Problems for the Clarifier Anti-Scalant System

1. **Description of Problem:** Anti-scalant is not pumping into the clarifier overflow tank or scale is occurring in the clarifier overflow tank, media filters, or filter discharge tank.

   Probable Causes and Control Techniques

   - The anti-scalant pump is pumping at a low a rate. Remedy: manually increase the pump speed or stroke. Check that pump has not lost suction.
   - Anti-scalant drum is empty or low. Remedy: replace anti-scalant drum with full drum.
   - Failure of anti-scalant metering pump. Remedy: verify that the anti-scalant pump is in operation. If not, check breaker switch position and power switch position. If both are in the ON position and the pump is not operating, electricians should verify proper power input and pump operation. Repair or replace pump as necessary.
   - Anti-scalant is pumping but not reaching the clarifier overflow tank. Check anti-scalant lines for leaks or rupture.

2. **Description of Problem:** General troubleshooting.

   Probable Causes and Control Techniques:

   A. See manufacturer's operation and maintenance manual for additional information.

3.9 Common Operating Problems for the Effluent Filtration System

1. **Description of Problem:** Abnormal or Turbid Effluent Quality

   Probable Causes and Control Techniques:
   The deep-bed sand filters are a relatively simple system with no internal moving parts, but difficulties can develop which adversely affect filtrate quality. Most filter problems result from the following operating errors:

   A. Interval between backwashing is too long. Remedy: backwash filter more frequently.

   B. Length of backwash is too short. Remedy: increase duration of air scour and backwash flow.

   C. Low or no backwash water flow. Remedy: check that filter discharge tank has sufficient volume for backwashing. Check that suction and discharge valves are

open to backwash pump. Check that backwash water valve to filter is open. Check that backwash pump is operating.

D. Air scour is not functioning or functioning at reduced rates

1. Backwash Air Boil. During a properly functioning backwash, the backwash air bubbles rising to the surface are evenly distributed over the entire surface area of the filter bed. Any significant variation from this pattern is not normal and must be investigated. Backwash air rising to the surface of the filter in large quantities in one or more isolated columns may be an indication that there is a break in the air distribution piping, that one or more of the holes in the air laterals are plugged, or that one or more of the air/water distribution blocks are broken or displaced. The remedy for this problem is to check the filter media and gravel for mudballs and/or encrustation and if the filter media is not the problem, remove the media and investigate the under drain.

2. No Backwash Air or Inadequate Backwash Air. If no air or inadequate air is being discharged into the filter during backwash, check for the following:

a. Backwash air compressor not operating properly.

b. Airline between compressor and filter leaking or broken.

c. Backwash air valve is not opening or compressor drain valve not closing.

d. Compressor block valve or filter air block valve is not open.

e. Compressor pressure relief valve is stuck open.
f. If the air supply to the filters is found to be functioning properly, the under drain system may need to be investigated.

E. Overloading the Filters. If design loadings are exceeded, long-term problems such as media encrustation, media plugging, mudball formation, and deterioration of filtrate quality can result.

Check to ensure that the maximum design loadings for flow and suspended solids and oil are not being exceeded.

F. Overdosing of Chemical Additives. If polymer, coagulants or other chemical additives are added ahead of the filters, addition rates must be controlled carefully. Overdosing can create long-term problems within the filter bed.

G. Air Binding Within the Media. The last 5 minutes of the backwash cycle consists of backwash water without any backwash air. This “rinse” phase is designed to remove residual air bubbles from the media, which otherwise creates an unnecessary head-loss. Air binding can be detected by manually bumping the backwash water pump at the conclusion of a backwash, and observing to see if there is a large release of air bubbles from the media. If air binding is a problem, consideration should be made to lengthening the rinse cycle or checking the backwash water rate during the rinse.

H. Mudball Formation. Mudballing is the accumulation of a mass of the impurities retained in the filter media into one or more large solid balls. This can occur from inadequate backwashing, overloading the filters, or overdosing of chemical additives. Once mudballs are allowed to form in a filter, it is very difficult if not impossible to backwash them out of the filter. If mudballs are allowed to grow in size and number, media replacement may become necessary.

I. Media Loss. There should be little loss from the filters during normal operation. The initial distance from the edge of the upper trough to the sand surface should be measured during start-up and recorded. If large quantities of sand are washed out during backwash, then the backwash air and water rates may be too high or the air-water backwash cycle may need to be modified.

2. **Description of Problem:** General troubleshooting.

Probable Causes and Control Techniques

A. For additional information on the backwash compressor and backwash pump, see manufacturer's operation and maintenance manual.

3.10 Common Operating Problems for the Plant Effluent System

1. **Description of Problem:** pH is too low (<6) or too high (>9).

Probable Causes and Control Techniques

A. pH meter is not reading correctly. Remedy: visually inspect the probe for breakage. Clean probe and calibrate. After calibration, verify calibration by checking the reading against two known standards.

B. The final effluent pH is controlled by the acid addition at the discharge of the clarifier overflow tank. Refer to Section 3.1.11 Clarifier Overflow pH Adjustment for trouble shooting.

2. **Description of Problem:** Filter Discharge Tank is Overflowing or No Discharge to the East Drainage

Probable Causes and Control Techniques

A. Intake or discharge valve is closed or partially closed. Remedy: open valves to allow desired flow to pass.

B. Piping has debris, scale, or ice causing discharge line plugging. Remedy: verify line pressure at pump discharge. A high discharge pressure indicates that line blockage is possible and the blockage should be removed. Clean debris/scale/ice from inside of piping. If pieces of pump lining are found, the pump shall be repaired. A low discharge pressure indicates that a blockage is not a probable cause.

C. Piping is leaking or ruptured. Remedy: repair leak or rupture.

D. Pump suction piping is plugged. Remedy: clean pump suction piping.

E. Flow meter is reading incorrectly. Remedy: repair or replace flow meter.

F. Failure of discharge pump. Remedy: verify that pump is in operation. If not, check that breaker is not tripped. If breaker is in the ON position and the pump is not operating, electricians should verify proper power input and pump operation. Repair or replace pump as necessary.

3.11 Common Operating Problems for the Sludge Dewatering System

1. **Description of Problem:** Centrifuge does not start.

   Probable Causes and Control Techniques:

   A. Failure of the drive motor to. Remedy: verify that the breaker switch and power switch are both ON. Electricians should verify proper power input and motor operation. Replace motor if necessary.

2. **Description of Problem:** No solids or low solids produced.

   Probable Causes and Control Techniques:

   A. Sludge steady head tank is empty. Remedy: open feed from clarifier #1 to sludge steady head tank.

   B. Flocculant feed to centrifuge is shut off, at the incorrect flow, or at the incorrect concentration. Remedy: check that flocculant is pumping to centrifuge, if flocculant is pumping refer to Section 3.1.9 for trouble shooting of the flocculant feed rate and concentration.

   C. Centrifuge feed pump motor has failed. Remedy: verify that the breaker switch and power switch are both ON. Electricians should verify proper power input and motor operation. Replace motor if necessary.

   D. Centrifuge feed pump stator or rotor has worn out. Remedy: check that pump is running and sludge flow is available to pump. If discharge from pump is low, replace stator and/or rotor.

3. **Description of Problem:** General troubleshooting

   Probable Causes and Control Techniques:

   A. See manufacturer's operation and maintenance manual for additional information.

4.0 ESTIMATE OF DURATION OF OPERATION AND MAINTENANCE ACTIVITIES

The current Midnite Mine Water Treatment Facility will be operated until a modified or new water treatment plant is constructed. Equipment will be maintained and replaced as needed until a new or modified treatment plant is operational.

5.0 PERSONNEL

The operation and maintenance of the Midnite Mine Water Treatment Facility must be performed with qualified personnel to prevent damage or deterioration of equipment and to provide effluent quality that meets discharge standards. The manpower and staffing requirements; personnel qualifications; certification program; and hiring problems, personnel disputes, and compliant resolution methods are described in this section.

5.1 Manpower Requirements/Staff

The treatment plant is designed for operation by one operator per 12-hour shift, four days per week with a helper on each shift four days per week. Routine maintenance will normally be performed on the day shift, four days per week, and emergency maintenance will performed as needed.

5.2 Qualifications

The scope of responsibility for both the operation personnel and management are outlined in Section 1.1.

The treatment plant is designed to be operated with minimal automation. Operators must be familiar with system operation. In general, the operators must follow standard operating procedures, keep daily operating records, and check all meters and recorders for proper operation. While there are no formal certification requirements for this facility, the operator or supervisor shall be knowledgeable on pumping, hydraulics, pumps, motors, water quality standards, good housekeeping and safety practices, wastewater treatment principles, settling characteristics of solids, sludge processing, sampling and basic chemical, physical, and biological tests.

Books useful for treatment plant operation are listed below:

1. Information Manual for Treatment Plant Operators
   Washington State Department of Ecology, 2004;
   Available online: http://www.ecy.wa.gov/pubs/0410020.pdf

2. Operation of Wastewater Treatment Plants
   Water Pollution Control Federation, 1970
   Available from: Water Pollution Control Federation
   Publications Department
   3900 Wisconsin Avenue, NW
   Washington, DC 20016

3. Sacramento Manual, Multiple Volumes
   Operation of Wastewater Treatment Plants, A Home Study Training Program
   Available from: Office of Water Programs
   Sacramento State
   Sacramento, CA

4. WPCF Wastewater Treatment Facilities, Management Skill Training Package, Volumes I and II
   Available from: Water Pollution Control Federation
   2626 Pennsylvania Avenue
   Washington, DC 20037

5. Methods for Chemical Analysis of Water and Wastes
   Available from: U.S. Environmental Protection Agency
   Office of Technology Transfer
   Cincinnati, OH 45268

6. Standard Methods for Examination of Water and Wastewater 16th Edition, 1985
   Available from: American Public Health Association
   1015 15th Street NW
   Washington, DC 20005

7. The Nalco Water Handbook
   Available from: McGraw-Hill Book Company
   P.O. Box 582
   Hightstown, NJ 08520-9959

8. Mathematics for Water and Wastewater Treatment Plant Operators, Volumes 1 and 2, by Joan Kirkpatrick
   Available from: Ann Arbor Science
   P.O. Box 1425
   Ann Arbor, MI 48106

9. American Water Works Association (AWWA) Volumes 1, 2, 3, and 4, and study guide
   Available from: American Water Works Association
   6666 West Quincy Avenue
   Denver, CO 80235

10. Hydraulics for Water and Wastewater Operators
    Available from: Ann Arbor Services
    P.O. Box 1425
    Ann Arbor, MI 48106

In general, the helper must perform routine operation and maintenance activities around the treatment facility. The helper must be knowledgeable about piping, pumps, and motors.

All personnel employed at the Midnite Mine Water Treatment Facility must have 40 hours of Hazardous Waste Training and must be updated annually with 16-hours of Hazardous Waste Training. Documentation will be kept at the facility indicating fulfillment of adequate training and yearly refresher courses.

5.3 Hiring Problems, Personnel Disputes, and Complaints

Problems related to hiring, personnel disputes, or complaints will be addressed by the plant supervisor.

6.0 WTP MONITORING AND STANDARDS

6.1 Purpose

The treatment system laboratory testing program provides the basis for process control and produces a record of how the treatment facilities are operating. This information keeps the operating personnel informed of plant efficiencies and helps in predicting problems that are developing in the system. Because laboratory test results are a record of plant performance, they are often evaluated by governing and/or regulatory bodies. For these reasons, it is essential that a treatment system's laboratory testing program produce complete and accurate results.

The Quality Assurance Project Plan defines the policies and procedures for analytical data collection and evaluation. The Standard Operating Procedures, which are incorporated as part of the QAPP, define procedures for sample collection. The Performance Monitoring Plan defines the proposed locations, methods, frequency of sampling, and reporting for surface water, groundwater, and sediment monitoring at the mine site. These documents should be used in conjunction with this plan to ensure that the monitoring data is properly collected and evaluated.

6.2 Sampling and Monitoring

The value of the results from the wastewater laboratory testing is dependent upon the sample being representative of the source from which it was taken. There are two types of samples taken for wastewater laboratory analyses. Their definitions follow:

24-hour Composite Sample – A combination of individual samples taken at selected time intervals, over a 24 hour period, to minimize the effect of the variability of the individual sample. Samples may be of equal volume or proportional to flow at time of sampling.

"Composite samples" shall be a flow proportioned mixture of not less than 8 discrete aliquots. Each aliquot shall be a grab sample of not less than 100 milliliters and shall be collected and stored in accordance with procedures prescribed in the most recent edition of Standard Methods for the Examination of Water and Wastewater.

Grab Sample – A single sample or measurement taken at a specific time or over as short a period of time as is feasible.

The water treatment facility sampling plan is outlined in Table 6-1, the parameters for the Effluent Self Monitoring Requirements are detailed in Table 6-2, and the interim limits for discharge to surface water as defined in Table 12-2 of the Record of Decision (ROD) are presented in Table 6-3. A detailed discussion of each internal laboratory test is provided in Sections 2 and 3. This discussion includes the purpose of each test, sampling site, expected range of results, test method reference, and consequences of test results.

Table 6-1. Onsite Monitoring and Testing Program

Task[1]	pH	Tank Measurement	Mixed	Flow	Amount
Neutralization Tank #1	D				
Neutralization Tanks #2 and #3	D				
Clarifier Overflow	D				
Sand Filter Feed	D				
Plant Feed				D	
Plant Discharge	D			D	
Barium Chloride System		D		D	
Anti-Scalant System				D	
Sulfuric Acid System				D	
Flocculant System			D	D	
Lime System			D	D	D

Legend: D – Daily – every two hours
1 – To be performed at the treatment facility

Dissolved Metals – means those metals which will pass through a 0.45 micron membrane filter. The specific method of sample treatment and analysis is defined in Section 4.1.1 of "Methods for Chemical Analysis of Water and Wastes", EPA-600/4-70-020, Revised March 1983. Environmental Monitoring and Support Laboratory, U.S. Environmental Protection Agency, Cincinnati, Ohio.

Total Recoverable Metals – means the concentration of metals in an unfiltered sample following treatment with hot dilute mineral acid as described in Section 4.1.4 of "Methods for Chemical Analysis of Water and Wastes", EPA-600/4-70-020, Revised March 1983. Environmental Monitoring and Support Laboratory, U.S. Environmental Protection Agency, Cincinnati, Ohio.

Total Metals – means the concentration of metals determined in an unfiltered sample following vigorous digestion as described in Section 4.1.3 of "Methods for Chemical Analysis of Water and Wastes", EPA-600/4-70-020, Revised March 1983. Environmental Monitoring and Support Laboratory, U.S. Environmental Protection Agency, Cincinnati, Ohio.

The treatment facility shall perform static-renewal testing of the final effluent once yearly, for acute and chronic toxicity.

The replacement static toxicity tests shall be conducted in general accordance with the procedures set out for 48 and 96 hour static-renewal test, method: EPA/600/4-90/027F. The facility shall conduct an acute 48-hour static replacement toxicity test using the species of Daphnid chosen for all toxicity testing from the following: *Ceriodaphnia dubia*, *Daphnia pulex*, or *Daphnia magna* and an acute 96-hour static replacement toxicity test using fathead minnows (*Pimephales promelas*). A dilution series consisting of a minimum of five concentrations and a control shall be used to estimate the concentration of lethal to 50% of the organisms (LC_{50}). The percent survival in the 100% effluent shall also be reported.

The facility shall conduct chronic toxicity testing using Water Flea (*Ceriodaphnia dubia*) and fathead minnows (*Pimephales promelas*) according to EPA Method EPA/600/4-89/001. The chronic toxicity testing shall be conducted on serial dilutions of effluent in order to determine the IC50 or EC50. This series of dilutions shall include 86 percent effluent and compare test results

to the control using hypothesis testing at the 0.05 level of significance as described in the EPA method.

Testing shall be conducted on 24-hour composite effluent samples. Samples taken for toxicity testing shall be cooled to 4° Celsius while being collected and shall be sent to the lab immediately upon completion. The lab shall begin toxicity testing as soon as possible, but no later than 36 hours after sampling was ended.

If the effluent stream potentially contains ammonia and/or chlorine, a sample to measure total ammonia and/or chlorine shall be sampled and tested for each toxicity testing event. All samples taken for toxicity testing shall have pH, total alkalinity, total hardness, dissolved oxygen, total dissolved solids and conductivity or salinity measured prior to test initiation.

All toxicity tests shall meet quality assurance criteria in the EPA manual listed above or in its update. If test results are determined invalid by EPA, testing shall be repeated with freshly collected effluent. If control performance does not meet protocol standards for acceptability, the test shall be repeated with freshly collected effluent.

Control water and dilution water shall be laboratory water meeting the requirements of the EPA manual listed above and of sufficient quality for good control performance.

The whole effluent toxicity test series shall be run on an unmodified sample of final effluent.

DMC may choose to conduct a full dilution series test during compliance monitoring in order to determine dose response. In this case, the series must have a minimum of five effluent concentrations and a control and include testing with 86 percent effluent (estimated effluent/receiving water mixing during critical low-flow conditions).

All whole effluent toxicity tests, effluent screening tests, and rapid screening tests that involve hypothesis testing and do not comply with the acute statistical power standard of 29 percent and the chronic statistical power standard of 39 percent as defined in WAC 173-205-020 must be repeated on a fresh sample with an increased number of replicates to increase the power.

Acids and bases shall not be added to samples or test solutions unless pH is outside of the range 6.0 to 9.0. Control of unionized ammonia toxicity due to pH rise shall only be accomplished by holding test chambers in a CO_2 atmosphere.

Table 6-2. Effluent Self-Monitoring Requirements

Effluent Parameters*	Frequency	Sample Type[a]
Total Flow, mgd	Continuous	Continuous
Total Suspended Solids, mg/L*	Monthly	24-hour Composite
Chemical Oxygen Demand, mg/L*	Quarterly	24-hour Composite
$Radium^{226}$ (dissolved), pCi/L*	Monthly	24-hour Composite
$Radium^{226}$ (total), pCi/L*	Monthly	24-hour Composite
Uranium[b*]	Monthly	24-hour Composite
Zinc (total), mg/L*	Monthly	24-hour Composite
Manganese (total), mg/L*	Monthly	24-hour Composite
Copper (total recoverable), mg/L*	Quarterly	24-hour Composite
Cadmium (total recoverable), mg/L*	Quarterly	24-hour Composite
Hardness (as $CaCO_3$), mg/L*	Quarterly	24-hour Composite

[a] See definitions
[b] U (uranium) is measured by the procedure discussed in 40 CFR 141.25(b)(2), or an equivalent method.
* Laboratory testing to be contracted.

Table 6-3. Interim Limits for Discharge to Surface Water*

Pollutant or Contaminant	Interim Daily Performance Standard
Uranium (total)	4,000 µg/L max. 2,000 µg/L avg.
Radium-226 (dissolved)	10pCi/L max. 3 pCi/L avg.
Radium-226 (total)	30 pCi/L max. 10 pCi/L avg.
Manganese (total)	10,000 µg/L max. 3,000 µg/L avg.
Copper (total)	184 µg/L max. 126 µg/L avg.
Cadmium (total)	15 µg/L max. 10 µg/L avg.
Zinc (total)	1,000 µg/L max. 500 µg/L avg.
pH	6-9
TSS	30 mg/L max. 20 mg/L avg.
COD	200 mg/L max. 100 mg/L avg.

* From Table 12-2, ROD

7.0 RECORDS AND REPORTING

7.1 Purpose

This section describes the records and reports that shall be maintained. An important factor in any efficient wastewater treatment system is the maintenance of accurate operational and financial records. Without a record of past operational performance, it is difficult to identify trends in any process. Operating cost records are essential if meaningful budgets are to be prepared. Accurate records permit plant operating personnel and management to maintain control of their facility. The principal types of records discussed in this section include:

- Daily Operating Log
- Laboratory Records
- Monthly Report to the US EPA
- Operating Costs and Record Keeping
- Personnel Records
- Emergency Conditions Record

Report submittal procedures and documentation, availability of information, and record retention are also discussed.

7.2 Daily Operating Log

The operation of the system shall be recorded and documented as an aid in maintaining and illustrating an efficient treatment plant operation. The Operating Log (attached as Appendix D) includes the critical data to be gathered daily. The following is a short description of the log entries:

Parameter	Description
Flow	Record the flow rates indicated on the flow meters which are located on the plant feed line from Pit 3 and Pit 4 and on the discharge line.
pH	Record the pH of the following: Neutralization Tanks #1, #2, #3, Clarifier Tank Overflow/Sand Filter Feed, and Plant Discharge.
Tank Level	Record the tank level for the barium chloride tank.
Chemical Addition	Record the feed rate for barium chloride, anti-scalant and acid (ml/min)
Flocculant System	Record the flocculant mixed (lbs/batch) and flow to Centrifuge #2.
Lime System	Record the dry lime transfer and lime slurry transfer.
Centrifuge	Record the back drive differential between centrifuge #1 and #2 and when centrifuges flushed.
Water	Record when samples were taken
Sludge	Record information related to loading, transportation and disposal.

The log shall be maintained in notebooks or 3-ring binders to prevent the destruction or alteration of these important records.

7.3 Water Collection System Monitoring Log

Daily monitoring of the pumping systems will be performed during the work week. These inspections shall be recorded in the inspector's daily logbook. An expanded weekly system

check of the components shall also be performed and recorded in the inspector's logbook and on the attached worksheet (Figure 7). Worksheets shall be bound in notebooks to prevent the destruction or alteration of these records.

Routine monitoring and activities at the PCP, Western Drainage Pump Station, Restroom Pumpback Station, East Seep Pump Station, Far East Seep Pump Station, and Blood Pool Pump Station will include, as applicable:

Daily:

1. Visual observation of the collection system.
2. Visual observation of collection system pipe transfer into holding tank.
3. Visual observation of the pumps.
4. Recording of Hobbs meter readouts.
5. Check of camera monitoring effectiveness.
6. General observation of radio settings and indicator lights.
7. General observation of emergency generators.
8. General observation of radio antennas and satellite systems.

Weekly:

1. All of the daily items.
2. Flow measurements shall be taken and recorded.
3. The alarm system will be cycled.
4. The modem will be reset.

7.4 Monthly Reports to the US EPA

7.4.1.1 Discharge Monitoring Reports

DMC shall submit monthly Discharge Monitoring Reports (DMRs) to the EPA containing the plant effluent total monthly flow in millions of gallons, range of pH measured throughout the month, and effluent concentrations for analytes listed in Table 6-2. These reports shall be prepared, postmarked, and submitted to the EPA by the tenth day of the following month.

7.4.1.2 Monthly Progress Reports

DMC shall submit monthly progress reports to the EPA and Spokane Tribe with respect to actions and activities undertaken pursuant to the AO and at a minimum shall include:

1. Describe the actions which have been taken to comply with the AO during the prior month.

2. Include all results of sampling and tests and all other data received by DMC and not previously submitted to EPA.

3. Describe work planned for the next sixty (60) days with schedules relating such work to the overall project schedule for RD/RA completion.

4. Describe problems encountered and anticipated problems, any actual or anticipated delays, and solutions developed and implemented to address any actual or anticipated problems or delays.

The progress reports shall be submitted within 15 business days following the conclusion of each month's work as detailed in the SOW.

7.5 Operating Costs

The major categories of operating costs are labor, utilities, chemicals, contract services and maintenance and supplies. A current operating cost breakdown for the treatment system is included in Section 8.0.

7.6 Personnel

Personnel records shall be maintained. A sample personal data sheet is shown on 8. It is important to update these files. All information will be treated confidentially and the file will be available for review by the employee. Questionnaires should be distributed periodically for updating this information.

7.7 Emergency Conditions Record and Reporting

7.7.1 Emergency Conditions Reporting

A record of emergency conditions affecting the treatment system shall be maintained. These emergency condition records might include bypass reports, spill reports and records of deteriorated effluent conditions.

7.7.2 Emergency Conditions Reporting

The procedures for non-compliance reporting are as follows:

7.7.2.1 Twenty-Four Hour Notice of Noncompliance Reporting

1. The following occurrences of noncompliance shall be reported by telephone within 24 hours from the time DMC becomes aware of the circumstances. Section 10.7, Emergency Response Contact Information, contains the contact information for EPA reporting.

    a. Any noncompliance which may endanger health or the environment.

    b. Any unanticipated bypass which exceeds performance standards. "Bypass" means the intentional diversion of waste streams from any portion of the treatment facility.

    c. Any upset which exceeds performance standards. "Upset" means an exceptional incident in which there is unintentional and temporary noncompliance with the performance standards because of factors beyond the reasonable control of DMC.

    d. Violation of a maximum daily performance standard for pollutants listed in Table 6-3 to be reported within 24 hours.

2. A written submission shall also be provided within five (5) days of the time that DMC becomes aware of the circumstances. The written submission shall contain:

    a. A description of the noncompliance and its cause.

    b. The period of noncompliance, including exact dates and times.

    c. The estimated time noncompliance is expected to continue if it has not been corrected.

    d. Steps taken or planned to reduce, eliminate, and prevent recurrence of the noncompliance.

7.7.2.2 Other Noncompliance Reporting

Instances of noncompliance not required to be reported within 24 hours shall be reported at the time that monthly reports are submitted. The reports shall contain the information listed in Section 7.7.2.1, part 2.

7.8 Submittal Procedures and Reporting

All documents required to be submitted pursuant to the AO shall be hand delivered or sent by overnight mail to the following persons or to such other persons as the parties hereafter may designate in writing:

1. Documents submitted to EPA Shall include one electronic copy and one hard copy sent to:

   Ellen Hale
   Remedial Project Manager
   U.S. Environmental Protection Agency
   Region 10 (ECL-113)
   1200 Sixth Avenue, Suite 900
   Seattle, Washington 98101

2. Documents submitted to the Spokane Tribe Shall include one electronic copy and one hard copy sent to:

   Spokane Tribe of Indians
   Natural Resources Department
   Attn: Randy Conolly, Superfund Coordinator
   PO Box 480
   Wellpinit, Washington 99040

   (For express mail):

   Spokane Tribe of Indians
   Natural Resources Department
   Attn: Randy Conolly, Superfund Coordinator
   6290-B Ford-Wellpinit Road
   Wellpinit, Washington 99040

In the event of a significant change in conditions or emergency circumstances relating to public health or welfare or the environment related to Work under this AO, DMC shall provide notification according to Section 7.7.

7.9 Documentation, Availability of Information, and Record Retention

7.9.1 Central File

The Dawn Mining Company shall establish a document control system with the following objectives:

1. Creation of a central file containing all documents pertaining to Work under the AO.
2. Organization of the documents to facilitate retrieval of information.
3. Segregation of documents containing information which DMC claims is privileged and confidential.
4. Establishment of procedures to ensure that all documents are routinely placed in the central file.

In addition, the Dawn Mining Company shall prepare and periodically update an inventory of all documents contained in the central file. The inventory shall contain for each document (1) the document date, (2) the author(s), (3) the recipient(s), and (4) the document title or subject. The DMC shall submit the document inventory or an update to EPA upon written request.

7.9.2 Document Management

The operator shall retain records of all monitoring information, including all calibration and maintenance records, corrective action reports, copies of reports, and data generated. Adequate records will be maintained to document the process by which project objectives are met. Records kept by the operator will be legible, identifiable, and retrievable and will be protected to the extent possible against loss, damage or deterioration. Access to project files will be restricted to project and other authorized personnel only.

The inventory of all required documents contained in the central filing system will be periodically updated. In addition, copies of non-privileged documents will be made available to the EPA and the State upon request. The inventory for each document will contain the following information:

- Document date
- Authors
- Recipients
- Document title or subject

7.9.3 Document Retention

The Dawn Mining Company shall provide to EPA upon request, copies of all non-privileged documents and information within their possession and/or control or that of their contractors or agents relating to activities at the Site or to the implementation of the AO including but not limited to; sampling, analysis, chain-of-custody records, manifests, trucking logs, receipts, reports, sample traffic routing, correspondence, and other documents or information related to the Work.

DMC shall preserve during the duration of the AO and for a minimum of ten (10) years after the remedial action has been completed, all records and documents in their possession or control,

including the documents in the possession or control of their contractors and agents on and after the Effective Date of the AO that relate in any manner to the Site. DMC shall also preserve and shall instruct their contractors and agents to preserve all documents, records and information of whatever kind, nature or description relating to the performance of the Work. At the end of this ten-year period, DMC shall notify the U.S. EPA at least ninety (90) days prior to the destruction of any such record, documents, or information and, upon request of the U.S. EPA, DMC shall deliver all such documents, records, and information to the EPA.

8.0 ANNUAL OPERATION AND MAINTENANCE COSTS

The annual operation and maintenance costs for the Midnite Mine Water Treatment Plant Facility are summarized in this section. The annual operation and maintenance costs include labor, utility, chemicals, supplies, training, service contracts, and insurance costs.

8.1 Annual Operation and Maintenance Costs

The estimated annual operation and maintenance costs are summarized in Table 8-1. Each of the costs are summarized below. The estimated annual operation and maintenance costs are $389,400.

Table 8-1. Estimated Annual Operation and Maintenance Costs

Operating Labor	Temporary Labor: 1 operator/shift, 2 daytime helpers	$206,000
	Salaried Personnel	$48,300
		$254,300
Utilities	Electricity & Propane	$21,000
	Fuel	$7,500
		$28,500
Chemicals	Treatment Plant Chemicals and Road Salt	$64,000
Supplies & Maintenance	Repair & Maintenance	$20,000
	Permit & Truck Licensing and Postage	$5,000
		$25,000
Contract Services	Compliance Analysis	$9,200
	Lease Equipment	$4,900
	Outside Contract Services	$3,500
		$17,600
	Total Estimated Yearly Operations Cost:	**$389,400**

8.1.1 Labor

The annual labor cost to operate and maintain the water treatment facility is estimated to be $254,300. This cost assumes: (1) one operator per shift, four days per week, and (2) one maintenance/truck driver on each shift, four days per week. The labor costs also include Dawn Mining salaried personnel related to plant operations and benefit costs for salaried employees.

8.1.2 Utilities

The annual utility cost to operate and maintain the water treatment facility is estimated to be $28,500. This includes the cost for electricity, propane, and fuel. No cost was included for the onsite cellular telephone.

8.1.3 Chemicals

The annual chemical cost for the operation of the water treatment facility is estimated to be $64,000. This includes the costs for hydrated lime, anti-scalant, flocculant, sulfuric acid, and road salt.

8.1.4 Supplies and Maintenance

The annual supply and maintenance cost for the operation and maintenance of the water treatment facility is estimated to be $25,000. The cost includes repair and maintenance at the plant, permit and license renewals for continued plant operation, and postage.

8.1.5 Contract Services

The annual contract services cost for the operation and maintenance of the water treatment facility is estimated to be $17,600. Service contracts will be handled on an as-needed basis. Contracted services include analytical costs for compliance monitoring at the plant and lease equipment for road maintenance, heavy equipment, etc.

8.2 Operating Entity

The existing water treatment plant shall continue to be managed and operated by the Dawn Mining Company.

9.0 MAINTENANCE

9.1 General

A quality maintenance program at a treatment facility is a necessity for producing a safe work environment and producing an effluent that meets performance standards. The supervisor at the plant is in charge of making sure that regular maintenance at the plant is performed. To ensure regular maintenance, specific equipment shall be inspected, repaired, etc., on fixed time intervals, as described below.

During operations, the centrifuges at the treatment plant shall be greased daily and the Pit 4 pump greased as needed and indicated on the pump sight-glass. All plant instrumentation shall be calibrated weekly. All other pumps at the plant are greased on a monthly basis and rebuilt, if necessary, during the operating season. During the winter months when the plant is shutdown, oil for all pumps will be changed, and pumps and other equipment will be inspected for wear and rebuilt, as necessary. All piping flanges are disconnected at the end of the operating season to allow for system draining.

The lime system auger will be cleaned out at the end of each operating season. At the end of the WTP operating system the slurry levels are lowered in the lime tanks and the tanks are inspected for buildup and damage. The lime system is left in recirculation mode during the winter to prevent scaling and precipitation of the tanks and piping.

Historically, the neutralization tank risers have been replaced every 4 years. The risers shall be visually checked yearly and replaced as needed. The risers are to be repaired or replaced if they have holes or leaks.

Historically, the sand filter media has been replaced every 5 years. The media shall be checked yearly and replaced as necessary. The protocol for media replacement consists of digging an inspection hole into the media and determining if the media is agglomerating.

For the remaining WTP, a formal replacement schedule does not exist and is not necessary. Tanks and piping shall be checked at the end of each operating season for corrosion and leaks and replaced/repaired while the WTP is shut down. Valves, pumps, and instrumentation shall be replaced or repaired as needed. Valves that do not operate properly, pumps that have unusual noise or show signs of excessive wear, and instrumentation that does not function, shall be repaired or replaced.

Manufacturer's maintenance manuals are generally the best guide for preventative maintenance instructions. These manuals are included in Appendix E, and the maintenance procedures shall be followed, as applicable.

In addition to this preventative maintenance, the supervisor shall work with plant maintenance personnel to continuously monitor the plant operations to determine other maintenance work to be performed.

9.2 Spare Parts

Enough spare parts are kept onsite for one complete pump rebuild for each type of pump, one rebuild for gearboxes and one new pH probe. When any of the spare parts are used, replacement parts shall be ordered as soon as time permits.

9.3 Maintenance Personnel

Only properly trained personnel may be expected to perform satisfactory inspections, repairs and preventative maintenance tasks. The plant supervisor will select proper personnel for the work to be performed. The personnel should be selected and trained before and during yearly plant start up. Even with a properly trained preventative maintenance staff, however, some tasks will be beyond their capabilities. In specialty areas, consultants or factory representatives may be called in to perform certain maintenance functions.

Trained personnel shall possess knowledge of the functions and operations of the mechanical equipment as well as the maintenance procedure for the service to be performed. The specific skills of a maintenance mechanic are required in the maintenance of mechanical and electromechanical machinery and equipment.

Only a qualified maintenance electrician shall maintain electrical or electronic operating control systems, equipment and fixtures, instrumentation, and heating and cooling systems. There is danger in electrical maintenance, particularly when high voltage is involved.

Personnel qualifications are discussed further in Section 5.0.

9.4 Housekeeping

Good housekeeping is necessary to promote a clean, safe workplace, and to establish a favorable public opinion. In summary:

1. A routine program and schedule for housekeeping shall be established. Personnel shall be oriented to the program and to a schedule of regular management inspections.

2. All places of employment, passageways, storerooms, and service rooms should be kept clean and orderly and in a sanitary condition.

3. The floor of every workroom will be maintained in a clean and, as when possible, a dry condition. Where wet processes are used, drainage should be maintained and false floors, platforms, mats, or other dry standing places should be provided.

4. Trash and loose debris and rubbish shall be picked up from floors, stairways, passageways, and platforms.

5. To facilitate cleaning, every floor, working place, and passageway shall be kept free of protruding nails, splinters, holes, and loose boards.

6. Walkways should be kept free of grease, sludge and oil.

7. Splash guards and drip pans shall be used whenever possible to keep oil and grease from machinery and pumps, off the floor. In cases where drip pans cannot be used, floor dry or other absorbent material shall be used.

8. Walkways should be shoveled and kept free of snow and ice. If this is not possible, they shall be salted and/or sanded.

9. Solvent-soaked and combustible wastes shall be disposed of in covered metal receptacles and removed daily from the plant.

10. Kick plates should be used on catwalks and raised platforms.

11. General housekeeping shall be scheduled on a periodic basis. This should include the floor drains and traps. Floor drains and traps are to be emptied when they are full. If the drains and traps are filled with plant process fluids (e.g., water, sludge, etc.) then these fluids can be metered back to the front of the plant. In the event that drain or trap fills with a waste (e.g., oil, solvent, etc.) then this material is to be pumped to a container that can be sealed and properly disposed, according to Federal and State regulations.

12. Process equipment shall be cleaned and painted as required.

13. Used oil shall be put in a container, sealed, and hauled to the Dawn Mining Company Mill Site and placed into the oil storage unit. Used absorbent materials shall be handled and disposed according to Federal and State regulations. Solidified lime can be added in small quantities to the WTP sludge, for disposal at TDA-4.

9.5 Special Tools and Equipment

A survey of in-house maintenance procedures to be performed indicates the tools that need to be kept onsite. Tools and equipment shall be maintained in good working order and stored in a tool area or located with appropriate equipment, when required.

The following is a list of tools that are typically used at the WTP and shall be kept onsite:

- Allen wrenches (SAE)
- Screw drivers (Slotted and Phillips)
- Hammer (Claw and Sledge)
- Combination wrenches (1/4” through 1 ¼”)
- Monkey wrench
- Pipe wrench
- Chisel set
- Hacksaw and blades
- Wire stripper/crimper
- Volt detector
- Pliers (Diagonal, Slip joint, Long nose)
- Socket sets (1/4”, 3/8”, 1/2”)(Ratchets, Extensions, Sockets ¼ through 1 ¼”)

9.6 Major Equipment Information

9.6.1 General

The equipment listed in Table 9-1 are classified as major pieces of equipment for the Midnite Mine Water Treatment Facility. The O&M manuals provided by the manufacturer should be

consulted for complete maintenance details. Where applicable, the manufacturer O&M manuals are provided in Appendix E except for manuals contained at the WTP and indicated by an * in Table 9-1.

Table 9-1. Major Equipment for the Midnite Mine Water Treatment Facility

Equipment		
Lime Silo	Filter Backwash Surge Tank	Lime Pump
Lime Slurry Tank	Sludge Steady Head Tank	Lime Delivery Pump
Lime Day Tank	Centrifuge #1*	Anti-Scalant Metering Pump*
Flocculant Mix Tank	Centrifuge #2*	Sulfuric Acid Metering Pump*
Flocculant Day Storage Tank	Centrate Surge Tank	Clarifier Feed Pump
Flocculant Delivery Pressure Tank	Discharge Conveyor	Flocculant Transfer Pump*
Barium Chloride Mix Tank	Lime Slurry Tank Agitator	Two Flocculant Chemical Feed Pumps
Barium Chloride Day Storage Tank	Lime Day Tank Agitator	Neutralization Tank #1 Feed Pump
Anti-Scalant Barrel	Flocculant Mix Tank Agitator	Clarifier Underflow Pump
Sulfuric Acid Barrel	Flocculant Day Storage Tank Agitator	Clarifier Overflow Pump
Neutralization Tank #1	Barium Chloride Tank Agitator	Filter Backwash Pump
Neutralization Tank #2	Barium Chloride Storage Tank Agitator	Filter Discharge Surge Pump
Neutralization Tank #3	Neutralization Tank #1 Agitator	Solution Discharge Pump
Neutralization Surge Tank	Neutralization Tank #2 Agitator	Centrifuge #1 Feed Pump
Clarifier #1	Neutralization Tank #3 Agitator	Centrifuge #2 Feed Pump
Clarifier #2	Pit 3 Feed Pump	Centrate Pump
Clarifier Overflow Tank	Pit 4 Feed Pump	High Pressure Air Compressor
Two Sand Filter Tanks	Barium Chloride Transfer Pump	
Filter Discharge Tank	Barium Chloride Chemical Metering Pump	
Instrumentation		
Pit 3 Feed Flowmeter	Neutralization Tank #3 Discharge pH Meter/Relay*	Filter Discharge Tank Level Switch*
Pit 4 Feed Flowmeter	Neutralization Surge Tank Level Switch*	Plant Discharge Flowmeter
Neutralization Tank #2 pH Indicator*	Filter Backwash Surge Tank Level Switch*	Plant Discharge pH Meter*

9.6.2 Spare Parts

The format for ordering spare parts will vary depending on the manufacturer. Below is a suggested format that will generally supply the information necessary for a successful supply part purchase.

1. Identify equipment using the contract number (or purchase order) as shown listed with invoice, warranty, etc.

2. Identify the part name and give the number of the drawing on which this part or assembly appears. If it is a part of a motor, pump, electrical control, or any part not manufactured by the company associated with major piece of equipment, the

information will be found in the manufacturer's reference data included in the manufacturer's equipment manual or on the manufacturer's nameplate.

3. Show the part number.

4. Show size, and include all pertinent dimensions (such as diameter, length, thickness, bore, pitch, etc.) whenever possible.

5. If parts being ordered are electrical in nature, give all pertinent data; voltage, amperage, wattage, cycle, speed, power factor, or other information given on a nameplate or brochure.

6. Submit your written purchase order or request for quotation, both signing and printing your full name so that the manufacturer will know whom to contact should further clarification of the order be necessary. ALL VERBAL ORDERS MUST BE VERIFIED IN WRITING.

7. Give return address and shipping address.

8. Give preferred method of shipping: parcel post, truck freight, rail freight, air express, etc.

9. Show quantity desired.

10. Give directions on where to send invoice.

11. Minimum order charges may be required.

9.7 Lubrication

Lubrication is a necessary maintenance task to ensure proper and long-lasting performance of equipment. The various parts in a plant require lubrication by different lubricants at different time frames. The various manufacturers of equipment used at the plant will specify different suppliers' lubricants even though the quality may be the same. The lubricants required at the plant shall be identified so that lubricants are purchased based on quality and need and that purchases of lubricant from the suppliers are not redundant. Specific lubrication requirements and frequencies for the major equipment used are listed in Table 9-2.

Table 9-2. Equipment Lubrication Requirements

Equipment	Grease			Oil		
	Type	Quantity	Frequency	Type	Quantity	Frequency
Lime Silo (Auger)	MP*	3 Pumps	Monthly	90 wt	1 qt	Annual
Clarifier #1	MP	6 Pumps	Annual	90 wt	1 ½ gal	Annual
Clarifier #2	MP	6 Pumps	Annual	90 wt	1 ½ gal	Annual
Centrifuge #1						
External Bearings	MP	6 Pumps	Daily			
Internal Bearings	MP	6 Pumps	Weekly			
Centrifuge #2	When Used					
External Bearings	MP	6 Pumps	Daily			
Internal Bearings	MP	6 Pumps	Weekly			
Discharge Conveyor	MP	3 Pumps – Multiple Locations	Monthly			
Lime Slurry Tank Agitator	When Used	6 Pumps	Monthly			
Lime Day Tank Agitator	When Used	6 Pumps	Monthly			
Flocculant Mix Tank Agitator	MP	6 Pumps	Monthly			
Flocculant Day Storage Tank Agitator	Not Used					
Barium Chloride Tank Agitator	MP	6 Pumps	Monthly			
Barium Chloride Storage Tank Agitator	MP	6 Pumps	Monthly			
Neutralization Tank #1 Agitator	MP	6 Pumps	Monthly			
Neutralization Tank #2 Agitator	MP	6 Pumps	Monthly			
Neutralization Tank #3 Agitator	MP	6 Pumps	Monthly			
Pit 3 Feed Pump	MP	6 Pumps (Motor)	Monthly	30 wt non-detergent	As Needed	Monthly
					1 ½ gal	Annual
Pit 4 Feed Pump	MP	3 Pumps	Monthly	15/40 wt	1 ½ gal	Weekly
Barium Chloride Transfer Pump	MP	3 Pumps	Monthly			
Barium Chloride Chemical Metering Pump	N/A					
Lime Pump	MP	3 Pumps	Monthly			
Lime Delivery Pump	MP	3 Pumps	Monthly			
Anti-scalant Metering Pump	N/A					
Sulfuric Acid Metering Pump	N/A					
Clarifier Feed Pump				30 wt non-detergent	1 ½ gal	Annual
Flocculant Transfer Pump	MP	3 Pumps	Monthly			
Two Flocculant Chemical Feed Pumps	MP	3 Pumps	Monthly			
Clarifier Underflow Pump	N/A					
Clarifier Overflow Pump				30 wt non-detergent	1 ½ gal	Annual
Filter Backwash Pump				30 wt non-detergent	1 ½ gal	Annual

Table 9-2. Equipment Lubrication Requirements (continued)

Equipment	Grease			Oil		
	Type	Quantity	Frequency	Type	Quantity	Frequency
Filter Discharge Surge Pump				30 wt non-detergent	1 ½ gal	Annual
Solution Discharge Pump				30 wt non-detergent	1 ½ gal	Annual
Centrifuge #1 Feed Pump	MP	6 Pumps	Monthly			
Centrifuge #2 Feed Pump	MP	6 Pumps	Monthly			
Centrate Pump	MP	3 Pumps	Monthly	30 wt non-detergent	1 ½ gal	Annual
High Pressure Air Compressor				Cascade Machine Services		Every 2 years
*MP=Multi-purpose Grease						

9.8 Contract Maintenance

Ideally, the Midnite Mine Water Treatment Facility maintenance staff should develop skills and qualifications to have the capability to perform all maintenance activities at the plant. However, if this is not possible, maintenance activities beyond the abilities of the plant maintenance staff shall be contracted to qualified manufacturer or trained personnel. Such help shall be minimized due to the higher cost of outside help.
The following is a list of jobs that may need to be contracted:

- Pumping and disposal of any harmful solutions collected in the building sump as a result of pipe breaks or tank failure.
- Laboratory analysis of the effluent to determine performance standard compliance.
- Janitorial service.
- General electrical repair.
- Major mechanical repairs to equipment.
- Road maintenance.

10.0 EMERGENCY OPERATING AND RESPONSE PROGRAM

The purpose of this section is to provide a response program for the operators in the case of an emergency situation during the operation of the Midnite Mine Water Treatment Plant (WTP). The response to any emergency requires the use of common sense to avoid causing any injury to personnel and avoid jeopardizing personal safety. The emergency response program is designed to minimize the adverse effects of an emergency situation, provide emergency response procedures, delegate responsibilities during an emergency situation, and provide a record of proper emergency equipment. A list of emergency response centers is found in Section 10.7. Figure 9 is a map showing directions to the WTP.

10.1 Vulnerability Analysis

The Midnite Mine Water Treatment Plant is vulnerable to a variety of emergency situations. The following emergency situations are covered in this section.

1. Power Failure
2. Flood
3. Fire
4. Wind Storms
5. Explosions
6. Equipment Breakdown and Process Failure
7. Spills
8. Personal Injury
9. Surge Events in Excess of Design Surge
10. Blizzards
11. Earthquakes

10.1.1.1 Power Failure

The Midnite Mine WTP relies on pumps to feed the plant and for processes within the plant. Power is provided to a transformer just inside the treatment plant property line by Avista Utilities. The remainder of the power system is maintained by Dawn Mining Company. There are three transformers located in the plant; 480V - 3 phase, 230V and 110V.

In the event of a power failure, the Pit 3 influent and effluent pumps will shut-down. The treatment plant effluent flow must be manually diverted back to Pit 3 prior to restarting the plant. The operator will contact his supervisor in the event the power is out in excess of 5 to 10 minutes. The supervisor will contact Avista to determine the cause and length of time the power will be out and request the facility be given a priority. If the power failure is due to a malfunction within the treatment building, the operator will contact his supervisor immediately. The electrical system will be inspected and the malfunction repaired immediately by a qualified electrician.

10.1.1.2 Flood

The Midnite Mine Pits may accommodate some flow during a large storm event. If a storm of significant magnitude has occurred, the influent and effluent conveyance system and equipment located outside the treatment plant building will be inspected for damage and repaired, as necessary, following the storm.

10.1.1.3 Fire

The immediate areas surrounding the Midnite Mine WTP are generally clear of combustible material. It is unlikely that a fire of significance will occur within the treatment plant as few combustibles are stored onsite. If a fire does occur, the operator will notify the local emergency responders IMMEDIATELY. When used on the reservation, 911 does not connect directly with emergency responders in Wellpinit, but goes to Stevens County. The local police department has stated it is best to call (509) 258-4400 in case of an emergency, including fire.

A small fire can be extinguished with the fire extinguisher located in the treatment plant building. If the fire is large, the operators will leave the building and remain clear until the fire is extinguished by the local fire department. The SOP for Fire Response Plan (MM-SOP16) includes information on responsibility, equipment, and protocol for fire fighting, evacuation and rescue. After the fire is extinguished, the extent of the damage will be assessed and repairs will be made, and all of the plant facilities will be inspected. The list of emergency numbers found in Section 10.7 will be displayed near the cell phone located in the WTP control room.

10.1.1.4 Wind Storms

The WTP is generally not vulnerable to damage during high wind conditions. If the building is damaged during a wind storm, repairs will be made following the storm.

10.1.1.5 Explosions

The water treatment facility is generally not vulnerable to explosions due to the nature of the processes used. If the building is damaged during an explosion, repairs will be made following the explosion.

10.1.1.6 Equipment Breakdowns and Process Failure

In the event of equipment breakdowns and process failure, the malfunctioning equipment will be repaired or replaced. Repair and replacement procedures are located in Section 9.0 and in the manufacturers O&M manuals.

10.1.1.7 Spills

Chemicals used in the treatment process include:

- Barium Chloride
- Sulfuric Acid
- Lime
- Flocculant
- Anti-Scalant

Spills from these materials shall be cleaned up promptly following the procedures presented in the Spill Prevention Control and Countermeasure Plan (SPCC), which is included as Appendix F. In the event that a dry powder spill results in air borne dust, the operators shall leave the spill area until the dust settles or the operators put on respirators. In the event of a sulfuric acid spill which results in fuming, the operators shall leave the spill area until the operators put on respirators or the fuming has stopped. The Material Safety Data Sheets (MSDS) for these materials are included in the SPCC.

10.1.1.8 Personal Injury

The operators shall be trained in first aid procedures. Hazards of the facilities and preventative measures are outlined in the Health and Safety Plan for the Phase I RD/RA: Interim Water Management for the Midnite Mine. This document shall be kept onsite at the WTP. In the event of an injury, the severity of the injury and/or situation will be evaluated by qualified personnel and appropriate action taken.

10.1.1.9 Overtopping of Pit 3

In the unlikely event that Pit 3 is overtopped due to excessive inflow or lack of plant capacity, the WTP may not have sufficient capacity to process all the water from the event. Should this happen, surge water may overtop Pit 3 and the operator shall notify the plant supervisor immediately. In turn, the supervisor will notify EPA and the Spokane Tribe. The phone numbers for these agencies are shown in Section 10.7. Following the event, the facilities and equipment outside the treatment building will be inspected for damage and repaired as necessary.

10.1.1.10 Blizzards

The site is located in an area that receives a large amount of snow during the winter months. Following snowfall, the site access roads will be plowed and snow will be removed from walkways as necessary for operation. In the event blizzard conditions occur during operations, the operating personnel will remain at the building. They will notify the plant supervisor of the conditions and wait for instructions from the supervisor.

10.1.1.11 Earthquake

The site is located in a region that may be subject to seismic activity (earthquakes). In the unlikely event of an earthquake, the operations personnel will shut down the equipment and leave the building. Following the event, the site will be thoroughly inspected for damage.

10.2 Methods to Reduce Vulnerability

The system has been designed to minimize vulnerability. Explosives and flammables shall not be stored in the building. Equipment shall be maintained on a routine basis to minimize equipment breakdown failure. Operators shall perform work in accordance with other sections of this manual and the Health and Safety Plan for the Phase I RD/RA: Interim Water Management for the Midnite Mine.

10.3 Emergency Equipment Inventory

- The list of emergency numbers found in Section 10.7 will be displayed near the cell phone in the control room of the WTP.
- Fire extinguishers are located at every exit and at the #2 conveyor.

- One foot actuated emergency eyewash is located on the landing to the clarifiers, one near the acid barrels in the truck shed, one hanging eyewash at the lime system, and one hanging eyewash in the belt room across from the shower.
- The cellular telephone is located in the control room near the exit door.
- A first-aid kit is located in the plant near the doorway by the control room.

10.4 Preserving Treatment System Records

A detailed discussion of records documentation and record preservation is detailed in Section 7.0.

10.5 Industrial Waste Inventory/Monitoring System

The sludge disposal from the WTP will be handled as discussed in the Residual Management Plan included as Appendix B of this document. Sludge shipments will be tallied on a daily basis. Shipping manifests for used oil and other industrial wastes, that require special disposal, will be maintained at the Dawn Mining Company Mill Site office.

10.6 Coordinating Instructions for Local Police and Fire Department

The treatment system's Emergency Operating and Response Program should be coordinated with the local police and fire departments.

Arrangements should be made to have the local police contact the treatment facility about any emergencies outside the treatment facility which may affect operations.

Arrangements shall be made with the local fire department, or other qualified entity, to routinely check firefighting equipment within the facility and inspect the facility for potential fire hazards.

10.7 Emergency Response Contact Information

The emergency personnel, procedures, and contacts for a spill incident were discussed in Section 4.0 of the Contingency Plan (Tetra Tech, 2009c). Emergency contacts are listed below for ease of reference. When used on the reservation, 911 does not connect directly with emergency responders in Wellpinit, but goes to Stevens County. The local police department has stated it is best to call directly to 258-4400 in case of an emergency, including fire.

General Emergency Numbers:

Local Law Enforcement (Stevens County Sheriff)	509-684-5296
Spokane Tribal Police Department and Ambulance	509-258-4400

Hospital:

Sacred Heart Medical Center:	509-455-3131
Washington Poison Control Center:	800-222-1222

Corporate Resources:

WTP Project Manager

	(office)	509-258-4511
Bob Nelson	(cell)	509-936-0688
	(home)	509-935-6719
	(pager)	509-889-6687

WTP Site Supervisor

	(office)	509-258-4511
Don Plummer	(pager)	509-889-6688
	(home)	509-796-4021

Site Operations Manager

	(office)	509-258-4511
Bobby Nelson	(Home)	509-935-7205
	(pager)	509-889-6686

EPA
Remedial Project Manager
Ellie Hale
EPA, Region 10 (ECL-113)
1200 Sixth Avenue, Suite 900
Seattle, Washington 98101
206-553-1215

EPA Emergency Response Unit, Region 10
206-553-1263

Other Resources:

National Response Center	800-424-8802
RCRA, Superfund & EPCRA Hotline	800-424-9346
U.S. EPA Environmental Response Team	732-321-6660

11.0 SITE SAFETY

A complete discussion of health and safety for the WTP is included in the ***Health and Safety Plan for the Phase I RD/RA: Interim Water Management for the Midnite Mine***. This document shall be kept onsite at the WTP with this OM&M Manual.

12.0 UTILITIES

The purpose of the utilities systems at the Midnite Mine WTP is to provide service to the various motors, instruments and components and to provide communication service. The WTP utilities include:

1. Electrical Service
2. Cellular Telephone Service
3. Propane
4. Portable Toilet Service

12.1 Electricity

High voltage is transmitted to the property boundary by Avista Utilities. The power is stepped down to 480V in order to use it at the site. Inspection and maintenance of the high voltage lines and transformer are carried out by the utility company. Any problems shall be reported to Avista at (800) 227-9187. The power available at the plant includes 480V-3 phase, 230V and 110V.

There is no standby power available at the WTP.

12.2 Telephone

Cellular telephone service is supplied to the site by Verizon Wireless. The cell phone is the only means of communication from the WTP. If a problem occurs with the cell phone service, contact Verizon at (800) 922-0204.

12.3 Propane

The propane tanks onsite at the WTP are serviced by Banner Furnace & Fuel located in Spokane. Any problems with the propane service shall be reported to Banner at (800) 570-2897.

12.4 Portable Toilet Service

Portable toilet service at the WTP is provided by American Onsite located in Spokane. Any problems with the toilet service shall be reported to American Onsite at (509) 244-8404.

13.0 REFERENCES

Miller Geotechnical Consultants, 2009. *Residuals Management Plan.* Prepared on behalf of Newmont USA Ltd. Prepared for U.S. Environmental Protection Agency. April 10.

Standard Methods for Examination of Water and Wastewater, 17th Edition, 1998. American Public Health Association. Washington, D.C.

Tetra Tech, Inc., 2009a. *Standard Operating Procedures for the Phase I RD/RA: Interim Water Management for the Midnite Mine*. Prepared for Dawn Mining Company and Newmont USA Limited. May 5.

Tetra Tech, Inc., 2009b. *Quality Assurance Project Plan for the Phase 1 RD/RA: Interim Water Management for the Midnite Mine.* Revision 1.0. Prepared for Dawn Mining Company and Newmont USA Limited. May 5.

Tetra Tech, Inc., 2009c. *Contingency Plan for the Midnite Mine Water Treatment Plant for the Phase I RD/RA Interim Water Management for the Midnite Mine.* Appendix A: Spill Prevention, Control and Countermeasures (SPCC) Plan. Revision 1.0. Prepared for Dawn Mining Company and Newmont USA Limited. May 5.

Tetra Tech, Inc., 2009d. *Transportation Plan for the Midnite Mine Water Treatment Plant*. Prepared for Dawn Mining Company and Newmont USA Limited. March 31.

U.S. Environmental Protection Agency (EPA), 1983. Methods for Chemical Analysis of Water and Wastes, EPA 600/4-79-020. Environmental Monitoring and Support Laboratory, US Environmental Protection Agency, Cincinnati, OH. March.

U.S. Environmental Protection Agency (EPA), 2006. Record of Decision, Midnite Mine Superfund Site, Spokane Indian Reservation, Washington. September.

U.S. Environmental Protection Agency (EPA), 2008a. Unilateral Administrative Order for Phase 1 Remedial Design and Remedial Action. U.S. EPA Docket No. CERCLA-10-2009-0026. November.

U.S. Environmental Protection Agency (EPA), 2008b. Statement of Work for Phase I RD/RA: Interim Water Management for the Midnite Mine Superfund Site, Spokane Indian Reservation, Washington. November 7.

FIGURES

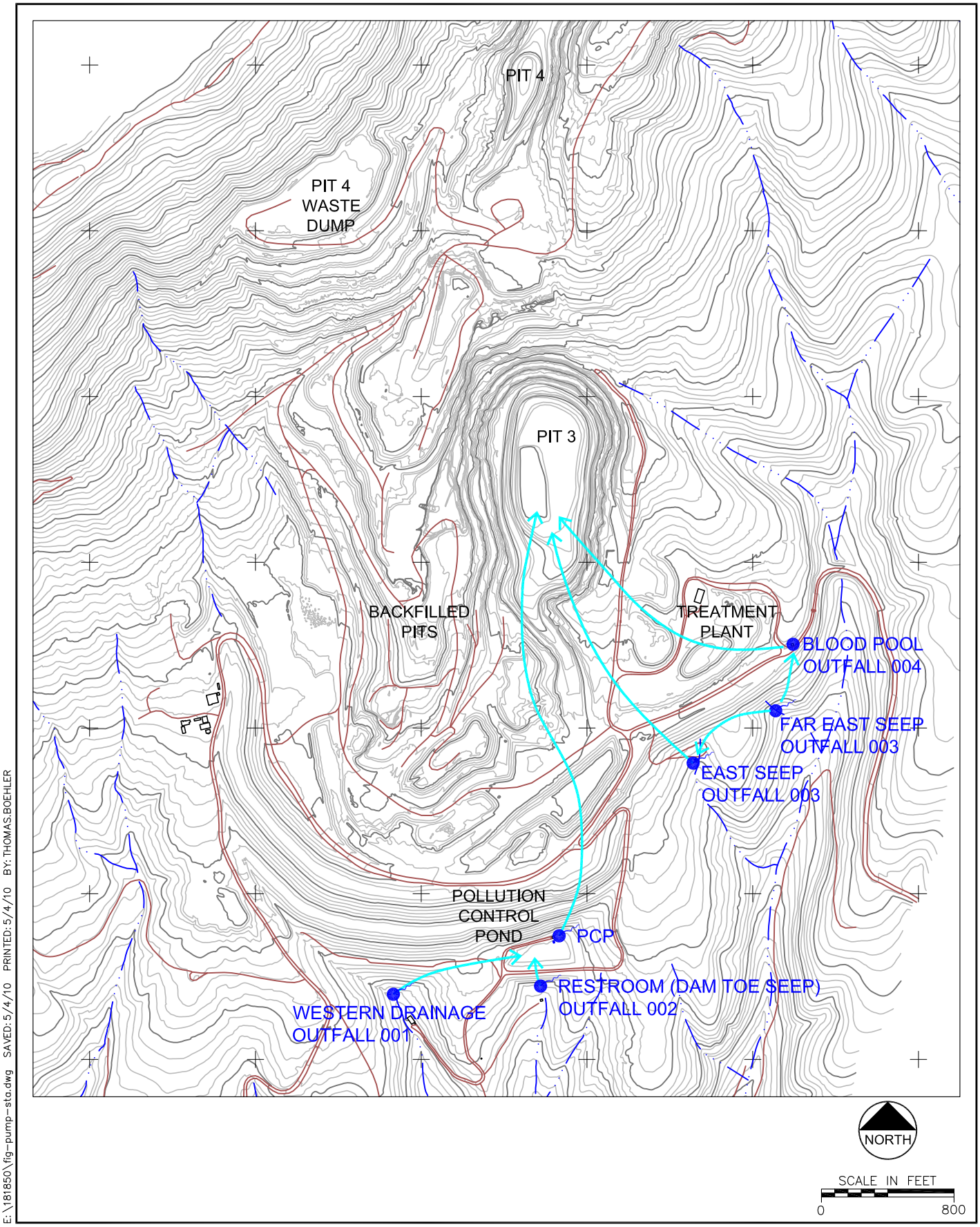

E:\181850\fig-pump-sta.dwg SAVED: 5/4/10 PRINTED: 5/4/10 BY: THOMAS.BOEHLER

Project No. 181850

May 2010

Figure 1
Water Collection Pump Stations

E:\181850\Pump-Sys-01.dwg SAVED: 5/4/10 PRINTED: 5/4/10 BY: THOMAS.BOEHLER

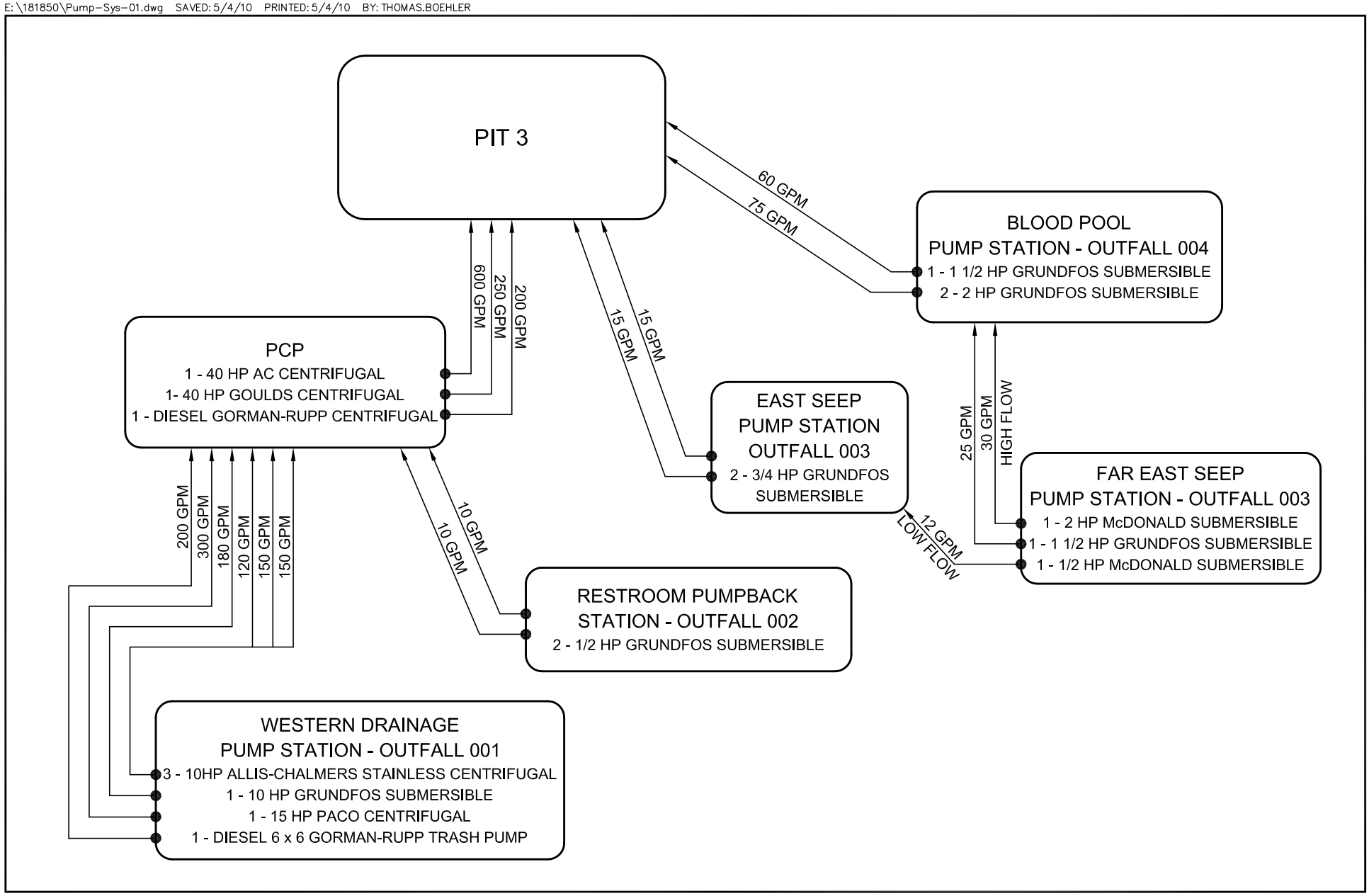

Project No. 181850

May 2010

Figure 2
Dawn Mining Company
Water Management Pumping System Schematic

AAH	Analysis Alarm High
AAL	Analysis Alarm Low
AR	Analysis Recorder
AI	Analysis indicator
FAL	Flow Alarm Low
FC	Flow Controller
FI	Flow Indicator
H_aSO_4	Sulfuric Acid
HCV	Hand Control Valve
HDPE	High-Density Polyethylene
LAH	Level Alarm High
LS	Level Switch
O/F	Over Flow
PI	Pressure Indicator
PVC	Polyvinyl Chloride
SS	Stainless Steel
VAR/SPD	Variable Speed

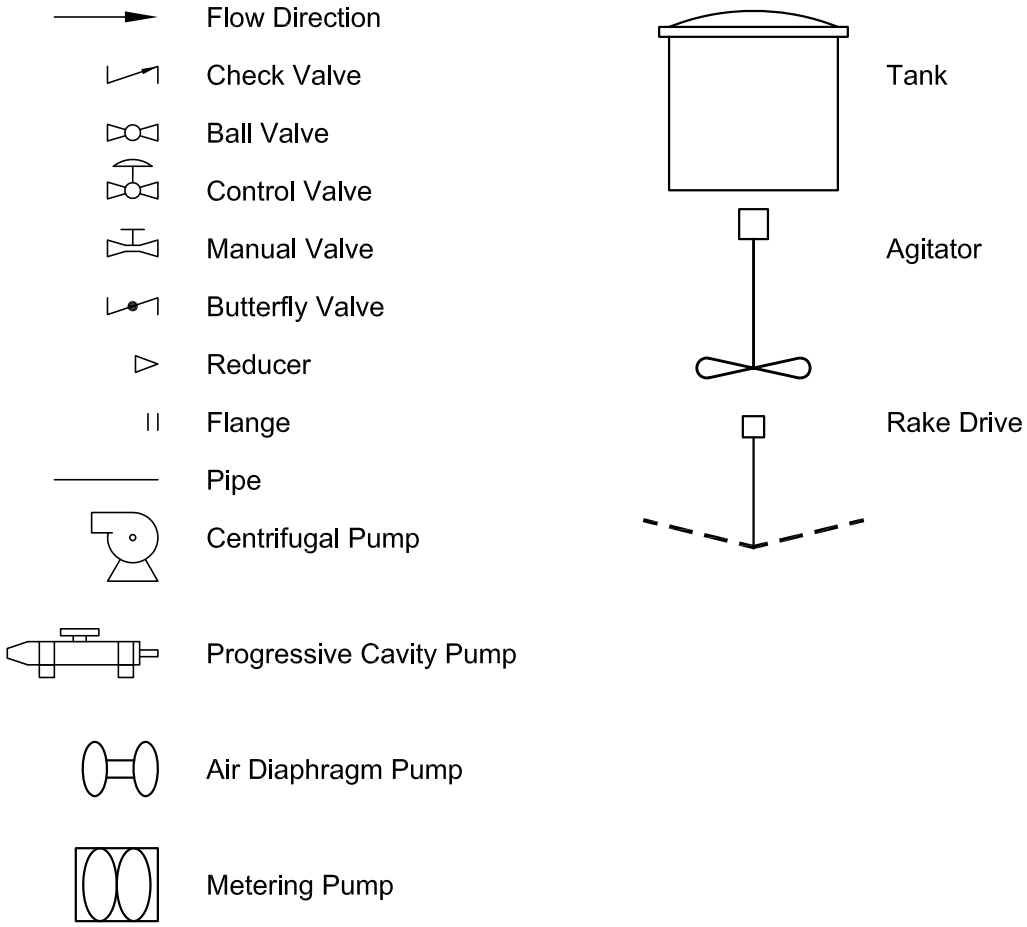

Figure 3
Conceptual Process Flow Diagram Legend

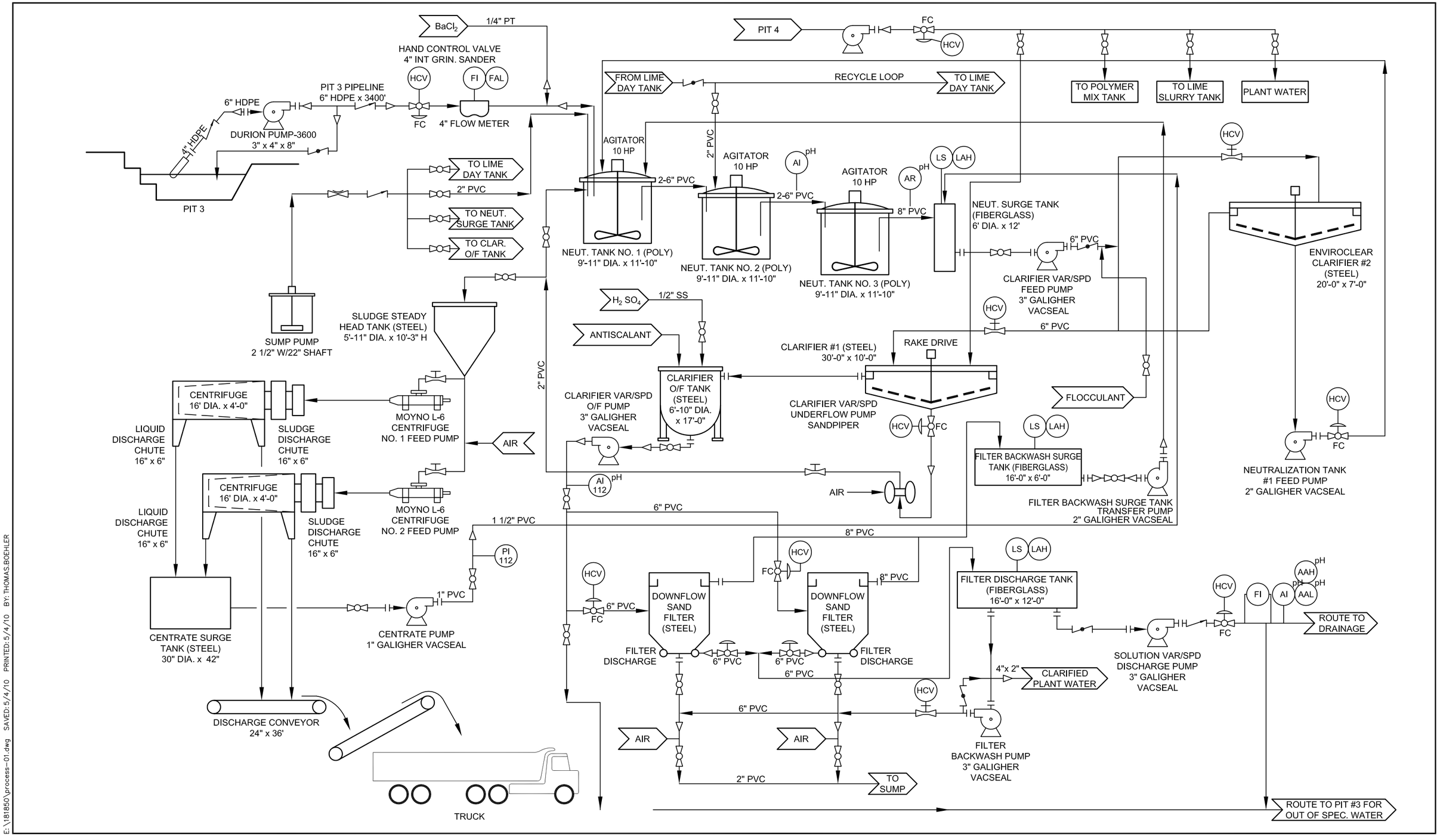

E:\181850\process-01.dwg SAVED: 5/4/10 PRINTED: 5/4/10 BY: THOMAS.BOEHLER

Project No. 181850

May 2010

Figure 4
Conceptual Process Flow Diagram

E:\181850\process-01.dwg SAVED: 5/4/10 PRINTED: 5/4/10 BY: THOMAS.BOEHLER

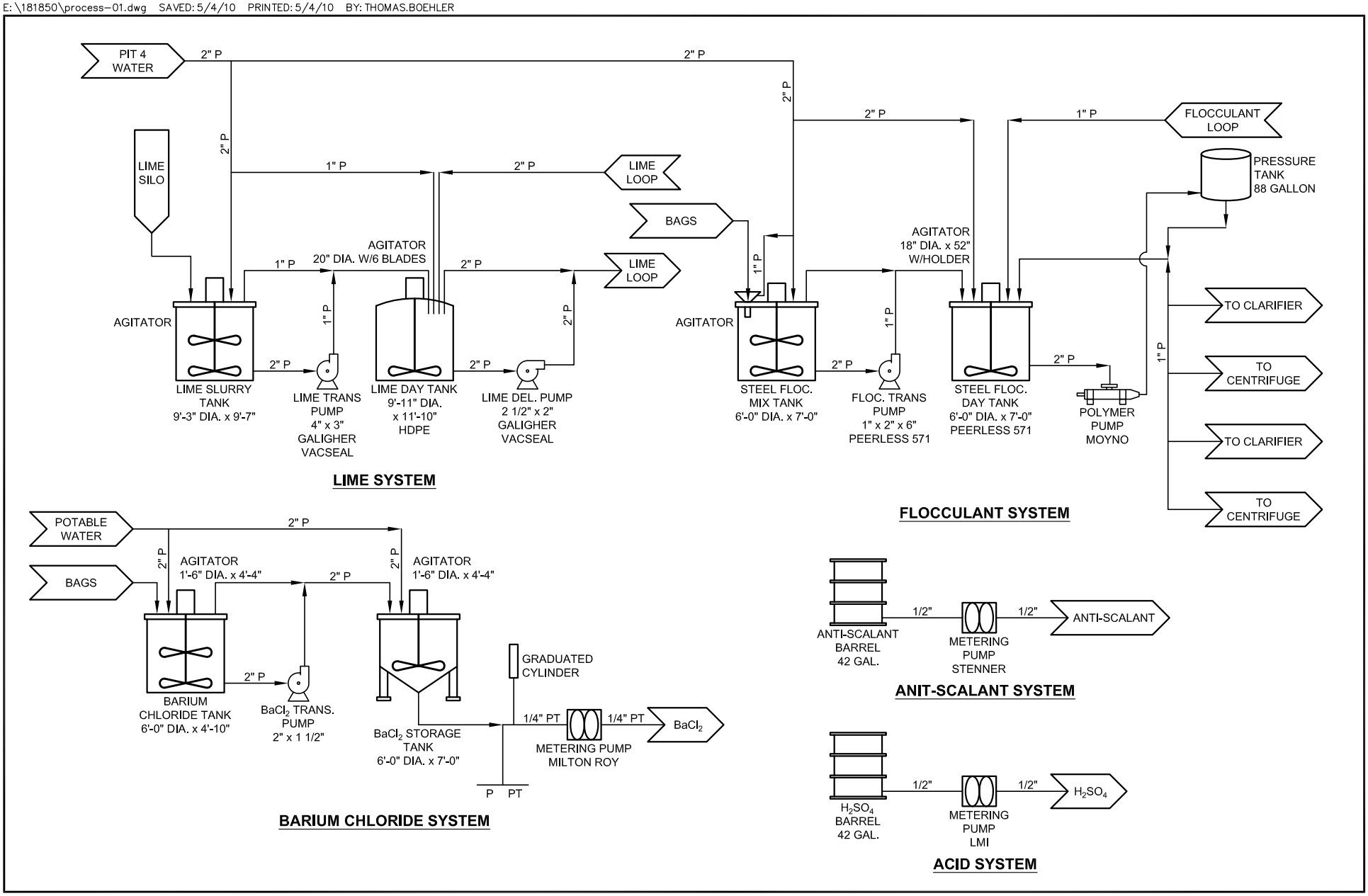

Project No. 181850

May 2010

Figure 5
Conceptual Process Flow Diagram

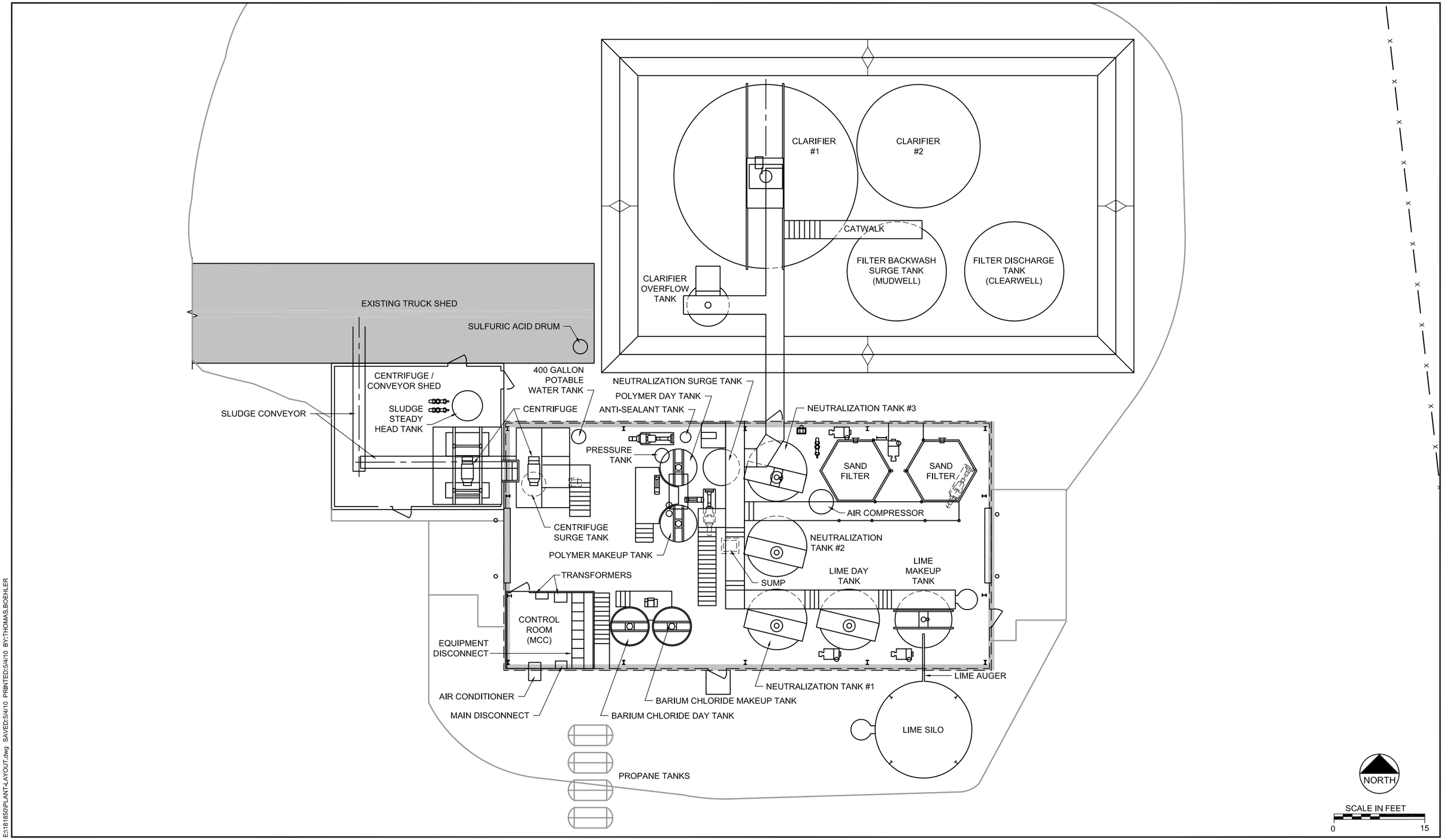

E:\181850\PLANT-LAYOUT.dwg SAVED:5/4/10 PRINTED:5/4/10 BY:THOMAS.BOEHLER

Project No. 181850

May 2010

Figure 6
Dawn Mining Company
Plant Layout

Figure 7
Western Drainage Check Sheet

Date	Time	Temp F	WD Flow	WDJ Flow	Total Flow	Pump Hours			Initials
		indoor/outdoor				Green	Yellow	Red	

Figure 8. Personal Data Sheet

Name:_____

Present Address:_____

_____

Home Phone No.:_____

Social Security No._____ Sex: Male Female

Birthdate:_____ (month/day/year)

Marital Status: Single Engaged Married Separated Divorced

Dependents: (List first name, middle initial, and last name if different than yours)

Spouse:_____ Birthday:_____

Children:_____ Birthday:_____

_____ _____

_____ _____

In the event of an emergency, the company should notify:

Name:_____

Address:_____

_____

Telephone No. (Day):_____ (Evening)_____

Relationship:_____

Years of Relevant Work Experience:_____

Relevant Training:_____

E:\181850\Location.dwg SAVED: 5/3/10 PRINTED: 5/3/10 BY: THOMAS.BOEHLER

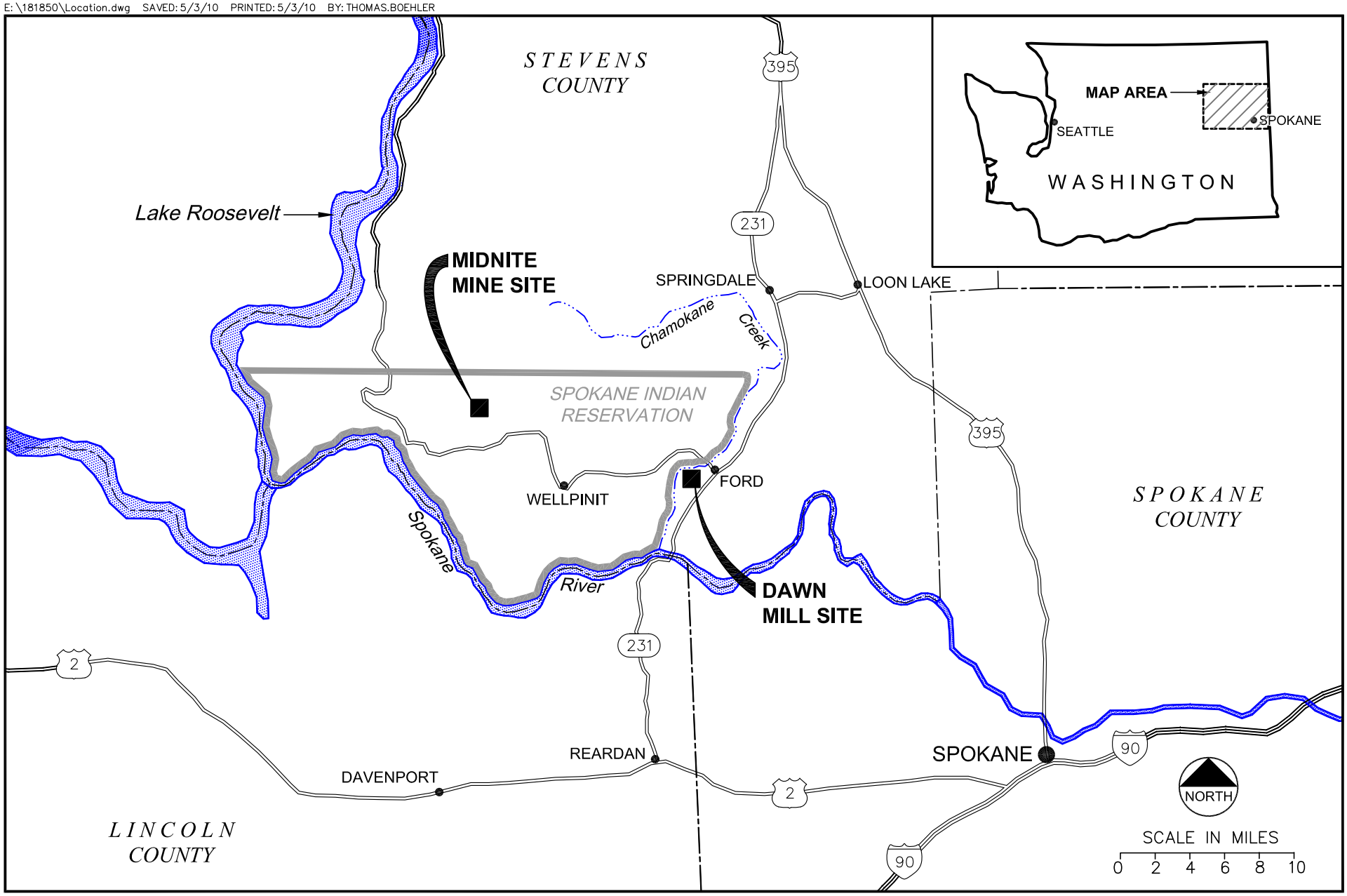

Project No. 181850

May 2010

Figure 9
Midnite Mine Site Location Map

APPENDIX A
MIDNITE MINE MASTER SCHEDULE

Midnite Mine Master Schedule

Frequency			Reference Section
Daily Activities			
	pH Measurements – Every 2 hours		
		Neutralization Tank #1	7.0 of this Appendix
		Neutralization Tanks #2 & #3	7.0 of this Appendix
		Clarifier Overflow	7.0 of this Appendix
		Sand Filter Feed	7.0 of this Appendix
		Plant Discharge	7.0 of this Appendix
	Flow Measurements – Every 2 hours		
		Plant Feed	7.0 of this Appendix
		Plant Discharge	7.0 of this Appendix
		Barium Chloride	7.0 of this Appendix
		Anti-Scalant	7.0 of this Appendix
		Sulfuric Acid	7.0 of this Appendix
		Flocculant	7.0 of this Appendix
		Lime Slurry	7.0 of this Appendix
	Tank Measurements – Every 2 hours		
		Barium Chloride Tank	7.0 of this Appendix
	Amount of Chemical Mixed or Used – Every 2 hours		
		Flocculant Mixed	7.0 of this Appendix
		Lime Mixed	7.0 of this Appendix
		Dry Lime Used	7.0 of this Appendix
	Sludge Loading, Transportation and Disposal		7.0 of this Appendix
	Grease Centrifuges		9.0 of this Appendix
Weekly Activities			
	Calibrate Plant Instrumentation		9.0 of this Appendix
Monthly Activities			
	Performance Sampling		7.0 of this Appendix
	Discharge Monitoring Reports		7.0 of this Appendix
	Progress Reports		7.0 of this Appendix
	Grease Pumps		9.0 of this Appendix
Annual Activities			
	Static Toxicity Testing		6.0 of this Appendix
	Change Oil for all Pumps		9.0 of this Appendix
	Rebuild Pumps and Other Equipment		9.0 of this Appendix
	Clean Out Lime System		9.0 of this Appendix
	Disconnect Piping Flanges		9.0 of this Appendix
	Check Neutralization Tank Risers – Replace as needed		9.0 of this Appendix
	Check Sand Filter Media – Replace as needed		9.0 of this Appendix
As Needed			
	Engineering Design Notice submitted to EPA		1.0 of Operations, Monitoring, Inspection, and Maintenance Report
	Changes to OM&M Plan		1.0 of Operations, Monitoring, Inspection, and Maintenance Report
	Grease Pit 4 Pump		9.0 of this Appendix

APPENDIX B
RESIDUAL MANAGEMENT PLAN

RESIDUALS MANAGEMENT PLAN

Prepared on Behalf of:

Newmont USA Ltd.
Dawn Mining Company

Prepared for:

U.S. Environmental Protection Agency
Region 10
1200 Sixth Avenue
Seattle, Washington 98101

Prepared by:

Miller Geotechnical Consultants
3801 Automation Way, Suite 100
Fort Collins, Colorado 80525

April 10, 2009

TABLE OF CONTENTS

1.0 INTRODUCTION 1
2.0 SLUDGE DISPOSAL AT THE DAWN MILL SITE 2
3.0 OTHER SLUDGE DISPOSAL ALTERNATIVES 2
3.1 American Ecology Facility 3
3.1.1 Containers 3
3.1.2 Transportation 3
3.1.3 Total Uranium Limit 3
3.1.4 Cost Estimate 4
3.2 Processing at Uranium Mill 4
3.3 Optional Modifications to WTP 4
3.4 Other Alternative 5
3.5 Energy Solutions 5
4.0 SUMMARY 5
5.0 REFERENCES 6

LIST OF ATTACHMENTS

Attachment 1 Request for Extension of Sludge Disposal in TDA-4
Attachment 2 Letters of Concurrence from U.S. Nuclear Regulatory Commission, U.S. Department of Energy, and the Northwest Interstate Compact for Extension of Sludge Disposal in TDA-4
Attachment 3 American Ecology Radioactive Material License
Attachment 4 E-mail from Perma-Fix Regarding their Capacity and Capability to Process the Midnite Mine Sludge at their Facility
Attachment 5 Forms submitted to American Ecology, Perma-Fix and Washington Department of Ecology
Attachment 6 E-mail from American Ecology Regarding License Condition 10A Requirements and Ability to Dispose of Midnite Mine Sludge at their Facility
Attachment 7 E-mail from Perma-Fix Regarding Cost Estimate for Processing Sludge at Perma-Fix
Attachment 8 E-mail from American Ecology Regarding Cost Estimate for Disposal at American Ecology
Attachment 9 E-mail from Denison Mining Regarding Processing Sludge at their Uranium Mill

1.0 INTRODUCTION

On November 7, 2008, Region 10 of the United States Environmental Protection Agency (EPA) issued to Newmont USA Limited and Dawn Mining Company a Unilateral Administrative Order for Phase I Remedial Design and Remedial Action, U.S. EPA Docket No. CERCLA-10-2009-0026 (UAO) with an attached Statement of Work (SOW). As part of the prescribed Phase I Remedial Design and Remedial Action, the SOW requires the submission of a draft Residuals Management Plan (RMP) to provide a plan for disposal of residual materials (sludge) from the water treatment plant (WTP) at Midnite Mine. Specifically, SOW requirements for the RMP are as follows:

> Manage Residuals (ROD Section 12.2.3)
>
> "In compliance with the ROD (including Section 12.2.3) and applicable regulations, Respondents shall manage all residuals generated by water treatment. Continued disposal of WTP residuals at the Dawn Mill would require amendment of the Mill License, which may not be possible in time for the start of water treatment in spring 2009. Respondents shall implement necessary modifications to the WTP necessary to dispose of WTP residuals (sludge) at a commercial low-level radioactive waste facility (LLRW facility), and dispose of WTP residuals in this manner unless and until arrangements for alternative disposal in accordance with the ROD, the UAO, and this SOW are approved by EPA.
>
> In accordance with the Schedule of Deliverables, Respondents shall submit a draft Residuals Management Plan (RMP) for WTP residuals (sludge) disposal at a commercial low-level radioactive waste facility (LLRW facility). The RMP shall identify applicable regulations for transport and disposal, disposal facility requirements and WTP changes which will be needed to comply with facility disposal requirements.
>
> For WTP changes necessary to meet disposal facility requirements (e.g. the addition of a filter press, containerizing or solidification of residuals) the RMP shall include for EPA review and approval a plan and schedule for pilot testing, submittal of design changes to EPA (see Section 3.4), and for implementation of changes in water treatment and waste management practices necessary for residuals disposal at a LLRW facility to commence when WTP operations resume no later than May 1, 2009. The RMP shall describe how the resulting WTP residuals will comply with facility requirements and include cost estimates for system modifications and unit costs for transport and disposal. Required treatment system changes shall comply with the ROD and shall not adversely affect the flow and pit drawdown rates, discharge water quality, or worker health and safety.
>
> The RMP shall also clearly indicate whether Respondents intend to evaluate other changes to the water treatment process, such as the addition of an ion exchange step, as provided in the ROD for purposes of reducing overall costs. If so, the plan shall include for EPA review and approval a description of and proposed schedule for the evaluation in accordance with Section 2.1.5 of this SOW, including a schedule for submitting a draft treatability testing plan, reports, and design recommendations. Optional treatment system changes shall comply with the ROD and shall not adversely affect the flow and pit drawdown rates, discharge water quality, or worker health and safety."

To address the requirements for the RMP as specified in the SOW, the following report presents a plan and schedule for sludge disposal from the WTP. A draft RMP was submitted to EPA on December 30, 2008. Comments were received from EPA and the Spokane Tribe of Indians on January 28, 2009 and on March 30, 2009. This revised RMP incorporates and addresses the comments that were received and updates the report to reflect the recently received permission to disposal of the sludge in the Dawn mill site TDA-4.

Permission has been received from the Washington Department of Health (WDOH) to dispose of the WTP sludge in the Dawn mill site TDA-4 in 2009 and 2010. The radioactive materials license will be amended by April 17, 2009 to document that approval. A discussion of the sludge disposal at the Dawn mill site is presented in Section 2. Other sludge disposal alternatives that might be used after 2010 include:

- Disposal at the American Ecology LLRW facility
- Shipping the sludge to a uranium mill for processing
- Disposal of sludge at a non-LLRW disposal site if pre-treatment of the water can remove uranium from the sludge to levels that would be acceptable at non-LLRW facilities
- Disposal of sludge in a new waste disposal facility dedicated to the WTP

These alternatives are discussed in Section 3.

2.0 SLUDGE DISPOSAL AT THE DAWN MILL SITE

Since 2000, sludge from the WTP has been disposed of in Dawn Mining Company's existing tailings disposal area, which is designated as TDA-4, pursuant to terms of its Radioactive Materials License. The previous License conditions provided that sludge disposal in TDA-4 would cease at the end of 2008 unless an extension is approved by the WDOH. Since 2000, substantially less sludge has been disposed of in TDA-4 than was approved by WDOH. Additionally, it is currently estimated that further disposal of sludge into TDA-4 will not adversely affect the schedule for final closure of TDA-4. Accordingly, in November 2008, Dawn Mining Company submitted to WDOH a request to extend the time for disposal of sludge in TDA-4 through 2010. The letter requesting that extension is attached (Attachment 1).

WDOH has approved the application to allow disposal of sludge from the WTP in the Dawn mill site TDA-4 during 2009 and 2010. WDOH approval was contingent on concurrence from the US Nuclear Regulatory Commission, the US Department of Energy and the Northwest Interstate Compact. Concurrence from those three agencies was received in March. A copy of each of the letters is provided in Attachment 2.

The WDOH has indicated that the Dawn Mill Site Radioactive Materials License will be amended to authorize disposal of sludge from the WTP in the Dawn mill site TDA-4 by April 17, 2009.

It is understood that disposal in TDA-4 is a temporary solution, as disposal in TDA-4 will only be allowed in 2009 and 2010, and that a long-term solution for sludge management will still need to be determined.

Dawn Mining Company would continue to transport the material from the mine to the mill in the manner that has been used historically. Costs associated with this option are primarily related to transportation, and total approximately $15,000/year. During the time that sludge is disposed in TDA-4, Dawn Mining Company would continue to coordinate with EPA in developing and obtaining approval of a long-term sludge disposal option.

3.0 OTHER SLUDGE DISPOSAL ALTERNATIVES

There are other sludge disposal alternatives that could be used for sludge disposal after 2010. These options will be advanced with the objective of having one or more available for long-term sludge disposal.

The other options that will be explored include disposal at the American Ecology LLRW facility, shipping for processing at a uranium mill, disposal at a municipal or commercial non-LLRW waste disposal facility with pre-treatment of the water for uranium removal, and disposal at a dedicated waste disposal facility. These options are discussed below.

3.1 American Ecology Facility

American Ecology has a LLRW disposal facility located near Richland, Washington. Discussions (including a site meeting on January 6, 2009) with site personnel and the Washington Department of Health (WDOH), which regulates the facility, indicate that sludge from the WTP can be accepted at the site. The facility has the ability to receive the total volume of sludge that would be produced by the WTP over many years and there are no minimum volume requirements. The requirements for waste material that may be accepted at this facility are set forth in American Ecology's radioactive materials license, a copy of which is included as Attachment 3.

It has been determined that the WTP sludge will need to be dried or solidified prior to disposal at the American Ecology facility. The Perma-Fix facility, which is located near the American Ecology facility, can be used to dry the material prior to disposal. The Perma-Fix facility processes waste, including radioactive waste, to meet conditions necessary for disposal at other facilities, including the American Ecology facility. The Perma-Fix site is regulated by the WDOH and their license will allow them to accept, store and process the WTP sludge. The Perma-Fix facility can be able to accept WTP sludge for processing within a minimum of 30 days after a contract is in place. Perma-Fix can accept the sludge without prior processing, and has the capacity to dewater the volume of sludge that will be produced by the WTP. This information was confirmed during a meeting at the Perma-Fix facility on January 6, 2009 with Perma-Fix and WDOH staff, and via an e-mail from Perma-Fix (Attachment 4).

Shipping requirements and containers to transport the sludge from the WTP to the Perma-fix facility are discussed in the Residuals Transportation Plan (Tetra Tech, 2009a).

On February 10, 2009, Dawn Mining Company submitted to American Ecology a "Radioactive Waste Generator Registration" form and a "Waste Profile" was submitted to Perma-Fix. An application for a "Site Use Permit" was also submitted to the Washington Department of Ecology on February 10. These forms constitute the information that needs to be submitted to allow for Perma-Fix to accept and modify the sludge and for American Ecology to accept the waste. Copies of the forms are included in Attachment 5.

3.1.1 Containers

The radioactive materials license for the American Ecology site has options for containers for disposal. The selection of the containers that would be used by Perma-Fix to transport the material from their facility and ultimately for disposal at the American Ecology facility would be determined in consultation between Perma-Fix, American Ecology and the WDOH. Containers to transport the sludge from the WTP to the Perma-Fix facility are discussed in Section 2.1 of the Residuals Transportation Plan (Tetra Tech, 2009a).

3.1.2 Transportation

Transportation of the sludge to the American Ecology site would be governed by US Department of Transportation and the WDOH license. The license requirements for shipping are included in license conditions 45 through 49 (see American Ecology's radioactive material license, Attachment 3). Details of the transportation plan to ship the sludge from the WTP to Perma-Fix and from the Perma-Fix facility to the American Ecology disposal site, including the containers, are documented in the Residuals Transportation Plan (Tetra Tech, 2009a).

3.1.3 Total Uranium Limit

Discussions with American Ecology indicate that an additional 88 curies of uranium may be disposed of at their facility. Based on volumes and content of the sludge produced by the WTP over the last several years, approximately 1 curie of uranium is contained in the sludge each year. Discussions with site personnel confirmed that American Ecology's acceptance of the WTP sludge would not be impacted by this limit for the next decade. Additionally, discussions between American Ecology and the WDOH indicate that American Ecology's license can likely be modified in the future should the uranium activity limit become restrictive. American Ecology has indicated

that the WDOH would be agreeable to discussing a license modification. E-mail confirmation from American Ecology regarding the information in this section is provided as Attachment 6.

3.1.4 Cost Estimate

An approximate cost estimate for this alternative is as follows:

Annual transportation cost[1]	$200,000
Annual processing costs[2]	$5,900,000
Annual disposal costs[3]	$2,000,000

3.2 Processing at Uranium Mill

Denison Mining Company has indicated that it would be willing and able to take the WTP sludge on a multi-year basis for processing at its White Mesa Mill in Utah. Denison has indicated that its radioactive materials license would need to be amended by the State of Utah to allow it to accept the sludge for processing. Denison estimates that a license amendment could be obtained within 6 to 12 months (see e-mail from Denison, Attachment 9). Discussions in mid-January with Denison indicates that they remain interested in taking the material and they have begun the process of applying for an amendment to their license to allow for them to accept the sludge for processing.

If an agreement is reached with Denison to process the sludge, permission from EPA to ship the sludge to the Denison mill will be sought. EPA's approval would be conditioned upon the State of Utah approving the necessary amendment to Denison's license. The sludge could be transported and processed without further dewatering. While the complete financial details are yet to be determined, some of the approximate economic factors include:

- Annual sludge tonnage - 850 tons
- Uranium content - 0.6%
- U3O8 spot price - $40/pound
- Gross value per ton - $636
- Sludge shipping costs - $200/ton

Given these numbers, this could be an economically attractive alternative. It is understood that discussions regarding royalty issues with the Spokane Tribe of Indians will be necessary for this alternative.

3.3 Optional Modifications to WTP

As suggested in the SOW and the ROD, it is possible that the WTP could be modified to provide pre-treatment of the water to remove uranium using ion exchange or other technology. Since the uranium would be removed prior to lime treatment and sludge precipitation, the residual sludge material would have substantially lower uranium concentrations. This could potentially allow for sludge disposal at commercial or municipal landfills at much lower costs than LLRW disposal facilities.

It is not possible to design, evaluate and implement such a system before May 2009. It might be possible, however, that a system could be in place by May 2010. In accordance with the SOW, section 2.1.5, Optional WTP

[1] Approximately 850 tons/yr at $200/ton + $30,000 for administrative requirements
[2] Approximately 850 tons/yr at $3.50/ton - see attached e-mail from Perma-Fix –Attachment 7
[3] Approximately 20,000 cubic feet/year at approximately $100/cubic foot for disposal – see attached e-mail from American Ecology –Attachment 8

Modifications, a Treatability Testing Plan (TTP) (Tetra Tech, 2009b) was submitted on March 31, 2009. As specified in Section 2.1.5.1 of the SOW:

> "The TTP shall describe the waste characteristics that must be achieved for disposal of the sludge as non-hazardous waste and non-low-level radioactive waste, including regulatory and facility requirements. The TTP shall include a plan for testing the process and the waste stream to assess whether the waste meets regulatory and facility requirements for disposal at other than a LLRW facility. The TTP shall present the capital and long-term costs of disposal based on available information and shall include a review of facilities where the ion exchange resin or other material could be regenerated or replaced. The TTP shall include a QAPP that addresses process monitoring, discharge monitoring, and waste characterization necessary to complete the evaluation."

The current plan is that pilot scale testing of ion exchange technology will be conducted in the summer of 2009. It is anticipated that the pilot scale testing will be conducted at the WTP. If the pilot scale testing is successful, the feasibility of a full scale facility would be evaluated. An evaluation of the sludge disposal alternatives including the allowable radiological and chemical constituent concentrations for alternative disposal facilities is a part of the TTP (Tetra Tech, 2009b).

It was requested that this RMP include a schedule for the development of the optional modifications to the water treatment plant. The TTP (Tetra Tech, 2009b) includes the schedule for the activities necessary to perform and evaluate the pilot scale testing for the WTP. The treatability testing evaluation report and treatability testing data report will be prepared and submitted detailing and evaluating the results of the pilot testing.

3.4 Other Alternative

Respondents will continue to evaluate long-term options for sludge disposal on site or at the Dawn mill site in a specifically designed disposal facility. These options would be technically and economically beneficial for long-term sludge management. A dedicated facility that is close to the WTP would significantly reduce transportation costs and risks, as well as overall disposal costs.

It is understood that it would take time to obtain appropriate regulatory approvals for a new disposal facility dedicated specifically to the WTP. The respondents are aware that these alternatives must comply with applicable tribal, state and federal regulations, and that off-site disposal must comply with EPA's Off-Site Rule. Respondents propose discussions with the EPA regarding the viability of and applicable regulatory process for these long-term alternatives to be initiated in 2009. Further advancement of these alternatives will be not affect compliance with the UAO and SOW requirement to have a short-term sludge disposal option in place by May 1, 2009.

3.5 Energy Solutions

Disposal at the Energy Solutions facility near Clive, Utah was initially considered. This alternative has been eliminated as it was determined that permission would have to be obtained from the Northwest Interstate Compact to allow for the waste to be shipped to the Energy Solutions facility and that they would not support this option as long as the American Ecology site could accept the waste.

4.0 SUMMARY

This RMP sets forth a plan for disposal of residual material (sludge) from the Midnite Mine WTP at the Dawn mill site TDA-4. Disposal in TDA-4 will continue through 2010.

Other alternatives for sludge disposal are also discussed. These alternatives include disposal at the American Ecology LLRW facility, shipping to a uranium mill for processing, disposal in a non-LLRW facility (with pre-treatment of the water for uranium removal) and disposal in a dedicated waste disposal facility. These options might not be in-place in time to accept sludge starting May 1, 2009. However, a concerted effort will be made to determine the optimal long-term solution for sludge disposal in a timely manner. When the optimal alternative is determined and developed, permission from EPA would be sought to implement the optimal solution.

5.0 REFERENCES

Tetra Tech, Inc. (Tetra Tech), 2009a. *Residuals Transportation Plan for the Midnite Mine*. March 31.

Tetra Tech, Inc. (Tetra Tech), 2009b. *Treatability Testing Plan: Pilot Scale Testing of Uranium Removal Using Anionic Exchange with Conventional Strong-Base Resins.* March 31.

Attachment 1
Request for Extension of Sludge Disposal in TDA-4

DAWN MINING COMPANY, LLC
5326 Uranium City Road
Ford, Washington 99013

November 20, 2008

Mr. Mikel Elsen
Supervisor, Waste Management Section
Washington Department of Health
Division of Radiation Protection
111 Israel Road S.E.
P.O. Box 47827
Olympia, WA 98504-7827

Re: Request for Extension of Sludge Disposal

Dear Mr. Elsen:

Dawn Mining Company (Dawn) hereby requests the Washington Department of Health (WDOH) for approval to dispose of sludge from the Midnite Mine water treatment plant (MMWTP) directly into TDA-4 for as long as TDA-4 is scheduled to remain open and available for such disposal. This request is supported by the following discussion, Attachment 1 to this letter, Radioactive Materials License No. WN-I043-2 (Amendments 23 and 24), the 2007 Addendum to Existing Environmental Documents (2007 Addendum), the 2000 Addendum to Existing Documents, the 2000 Technical and Environmental Evaluation (2000 TEE), the 1994 Supplemental Final Environmental Impact Statement and the 1991 Final Environmental Impact Statement.

I. Background

In 1999 and 2000, when Dawn originally sought approval from WDOH for direct disposal of MMWTP sludge into TDA-4, it was anticipated that Dawn would need to dispose of the sludge through 2004. While at that time Dawn did not expect that sludge disposal would be needed beyond 2004, WDOH evaluated and ultimately approved of Dawn's proposal to directly dispose of MMWTP sludge into TDA-4 until 2008. According to the millsite closure timeline submitted to the WDOH in 1999, TDA-4 was thought to be available for such disposal through the end of 2008 and sludge could be disposed of into TDA-4 through 2008 without interfering with TDA-4 closure and other millsite closure activities. See 2000 TEE. Amendment 23 of Dawn's Radioactive Materials License, issued in 2001, placed no time limit on the direct sludge disposal. WDOH's 2007 amendment to Dawn's license imposed a time limit on direct sludge disposal. Amendment 24 requires that direct disposal of MMWTP sludge into TDA-4 cease at

the end of 2008, but expressly contemplates that an extension of time for sludge disposal may be approved. See Condition 33, Radioactive Materials License WN-I043-2, Amendment 24 ("Unless specifically approved by the department, receipt and disposal of MMWTP filtercake sludge at the licensee's millsite shall cease December 31, 2008.").

Since the issuance of Amendment 24 of Dawn's license, two new developments have occurred. First, a more detailed closure timeline[1] for Dawn's millsite shows that TDA-4 will remain available for sludge disposal beyond 2008.[2] Second, the Environmental Protection Agency (EPA) recently ordered Dawn to continue to operate the MMWTP and make arrangements for disposal of the MMWTP sludge. See Unilateral Administrative Order and Statement of Work for Water Treatment and Sludge Disposal at Midnite Mine Superfund Site (EPA, November 7, 2008). Dawn's current request is in response to these two developments and is made pursuant to Condition 33 of its license. While Dawn explores other sludge disposal options, Dawn seeks the approval of the WDOH to continue direct disposal of sludge into TDA-4 for as long as TDA-4 is scheduled to remain open and available for such disposal.

II. WDOH's 2000 Approval of Direct Sludge Disposal

In 2000, the WDOH prepared a technical and environmental evaluation of Dawn's proposal to dispose of MMWTP sludge directly into TDA-4. The 2000 TEE was based on the following information regarding the direct disposal of MMWTP sludge:

- The direct sludge disposal proposal was part of an amended millsite closure plan that included abandoning the approved and then-licensed plan to fill TDA-4 with imported 11.e(2) byproduct material. Direct disposal of the MMTWP sludge into TDA-4 was proposed to replace the then-current operation of milling the sludge and discharging the resulting tailings into TDA-4.

- Dawn possessed a radioactive materials license under which Dawn operated the MMWTP and transported the resulting sludge to the Dawn mill. No changes to the MMWTP process or the mode of transportation of the sludge were anticipated.

- Sludge production resulted in one or two truckloads per day shipped from the mine to the mill, except during the off-season winter shutdown.

- TDA-4 would be open and available for sludge disposal, without interfering with closure activities, through the end of 2008.

- If Dawn were to dispose of sludge through 2008, it was anticipated that a total of 753,500 cubic feet of sludge would be disposed of into TDA-4. This total was based on 137,000 cubic feet of sludge being disposed of into TDA-4 each year during the years 2000 and

[1] The more detailed closure timeline will be submitted to WDOH with the 2008 update of the Integrated Project Schedule (IPS).

[2] As will be discussed in more detail, the western half of TDA-4 will remain open and available for sludge disposal in 2009 and 2010. A small area in the western half of TDA-4 will remain open for part of 2011 for final soil cleanup activities.

2001, and 68,500 cubic feet of sludge being disposed of into TDA-4 each year during the years 2002 through 2008.

- The MMWTP sludge did not designate as Hazardous or Dangerous Waste.

See 2000 TEE at 6-7. WDOH's evaluation in the 2000 TEE was based primarily on a comparison of the direct sludge disposal proposal with the approved and then-licensed 11.e(2) byproduct material closure plan which included milling the sludge and discharging the resulting tailings into TDA-4. WDOH's 2000 approval of direct sludge disposal was based on the following environmental findings:

Volume of Sludge to TDA-4: The increase in the volume of material to be disposed into TDA-4 from direct sludge disposal was insignificant when compared to the overall volume of material already in TDA-4. The proposed sludge volume was also insignificant when compared with the then-licensed plan to fill TDA-4 with imported 11.e(2) byproduct material.

Geotechnical Stability: Direct sludge disposal eliminated the addition of 6,000 gallons per day of liquid solution to the sludge from the milling process, required sludge depths no greater than two feet, and required the addition of site soil between layers of sludge. As a result, the potential impacts from geotechnical instability were reduced.

Transportation: Direct sludge disposal did not involve a change to the transportation of the sludge from the mine to the millsite; it did, however, eliminate chemical tanker truck shipments to the millsite.

Water Quality: The mobility of uranium and other constituents from unprocessed sludge was no greater and very likely less than from processed sludge tailings.

Air Emissions: Direct sludge disposal involved no changes related to air emissions.

Biota: Direct sludge disposal involved no changes related to biota impacts.

Timing: Ceasing sludge processing meant earlier decommissioning and disposal of the mill buildings, earlier cleanup of contaminated soils, and earlier closure of TDA-4, resulting in a possible acceleration of the evaporation schedule and millsite closure timeline.

Radiation: Direct sludge disposal (and abandonment of the imported 11.e(2) material closure plan) involved no substantial changes to total radioactivity values and actually reduced the total amount allowed by approximately 3,000 curies.

Regulations: Direct sludge disposal complied with Criterion 6A(c) requirements.

See 2000 TEE at 8-12.

The 2000 TEE further concluded that the direct disposal of MMWTP sludge into TDA-4 complied with the ten criteria set forth in the Nuclear Regulatory Commission's (NRC) Final

Revised Guidance on Disposal of Non-Atomic Energy Act of 1954, Section 11e.(2) Byproduct Material in Tailings Impoundments (NCR Guidance).[3] See 2000 TEE at 12-15 and the discussion below.

III. Proposal to Extend Direct Sludge Disposal

Dawn's current proposal is to extend the direct disposal of MMWTP sludge into TDA-4 for as long as TDA-4 is open and available for such disposal. Dawn will continue to employ the same MMWTP process and the same mode of transporting the sludge from the mine to the mill. Dawn expects the truck volume to be one truck per day during MMWTP operation. As with current sludge disposal operations, Dawn will follow DMOP 18 which, among other things, sets forth procedures for TDA-4 preparation and water management, placement and covering of the sludge, and sludge testing and monitoring.

Based on MMWTP operations and actual sludge volumes produced and placed in TDA-4 during the period 2001-2008, the volume of sludge that could be disposed of in TDA-4 during the remaining time that TDA-4 is scheduled to be open and available is expected to be no more than 90,000 cubic feet.[4]

Millsite closure activities will continue uninterrupted during the extended sludge disposal period and the final closure of TDA-4 will not be delayed as a result of the extension. Sludge would only be accepted in TDA-4 for as long as TDA-4 is open and available for sludge disposal and such that sludge disposal does not interfere with the scheduled closure of TDA-4 and other millsite closure activities. See Extension of Direct Sludge Disposal and Millsite Closure, attached hereto as Attachment 1.

IV. Dawn's Proposal to Extend Sludge Disposal Satisfies All Approval Criteria

Dawn's proposal to extend direct sludge disposal for as long as TDA-4 is open and available for such disposal should be approved for the following reasons:

- Direct sludge disposal was approved by WDOH in 2000. The basis of that approval was that direct sludge disposal met all regulatory and NRC Guidance criteria, and posed no significant environmental impacts.

- The current proposal to extend direct sludge disposal is essentially the same as the proposal evaluated by WDOH in 2000. The only change is that TDA-4 will be open and available for sludge disposal for longer than was anticipated in 2000.

---

[3] Criteria 8 and 9 of the NRC Guidance require approval from the Northwest Interstate Compact (Compact) and the United States Department of Energy (USDOE), respectively. These two criteria were not yet satisfied at the time of the 2000 TEE in June of 2000, but were later satisfied upon receipt of approvals from both the Compact and the USDOE.

[4] The estimate of 90,000 cubic feet of additional sludge is conservative. It is based on 45,000 cubic feet of sludge disposed of each year for two years. 45,000 cubic feet was the maximum annual volume disposed of between 2001 and 2008. The actual volume of sludge that would be placed into TDA-4 during the extension period is expected to be less.

- Condition 33 of Amendment 24 of Dawn's Radioactive Materials License expressly contemplates the possibility of an extension of sludge disposal.

- Even with the extension, the total volume of sludge placed in TDA-4 would be significantly less than the volume evaluated by WDOH in 2000.

- An extension of direct sludge disposal would result in no new environmental impacts from those evaluated in 2000.

- The proposal meets all NRC Guidance criteria.

- The proposal will not result in any delay in TDA-4 closure or millsite closure.

As the following discussion demonstrates, because the proposal to extend direct sludge disposal for as long as TDA-4 is open and available is essentially the same direct sludge disposal proposal evaluated and approved by WDOH is 2000, the evaluation and analysis of the proposal remains essentially unchanged.

A. WDOH's 2000 Environmental Analysis is Not Affected by the Extension

A review of each element of the environmental evaluation conducted by WDOH in 2000 TEE reveals that extending direct sludge disposal has no effect on the analysis.

Volume of Sludge to TDA-4: In 2000, the WDOH's evaluation was based on a total anticipated volume of 753,500 cubic feet of MMWTP sludge that would be placed into TDA-4 through 2008. A comparison of the estimated volume of sludge evaluated with the actual volume of sludge placed in TDA-4 shows that less than one third of the expected volume of sludge has actually been disposed.

Year	Volume of MMWTP evaluated in 2000 TEE	Actual Volume of MMWTP sludge placed in TDA-4
2000	137,000 cubic feet	None[5]
2001	137,000 cubic feet	27,926 cubic feet[6]
2002	68,500 cubic feet	22,060 cubic feet[7]
2003	68,500 cubic feet	29,704 cubic feet[8]
2004	68,500 cubic feet	24,750 cubic feet[9]

[5] Dawn's license allowing for direct sludge disposal was not issued until 2001.
[6] See Dawn Mining Company records.
[7] See Dawn Mining Company 2002 Environmental Monitoring Report, submitted to WDOH May 31, 2003.
[8] See Dawn Mining Company 2003 Environmental Monitoring Report, submitted to WDOH May 31, 2004.
[9] See Dawn Mining Company 2004 Environmental Monitoring Report, submitted to WDOH May 31, 2005.

2005	68,500 cubic feet	15,420 cubic feet[10]
2006	68,500 cubic feet	45,220 cubic feet[11]
2007	68,500 cubic feet	36,005 cubic feet[12]
2008	68,500 cubic feet	30,898 cubic feet[13]
Total	753,500 cubic feet	231,983 cubic feet

Even with the extension, the total volume of sludge directly disposed into TDA-4 will be less than half of the volume evaluated by WDOH in the 2000 TEE. As a result, the current proposal to extend direct sludge disposal does not change the 2000 TEE conclusion that the volume of sludge placed in TDA-4 will result in no significant impacts.

Geotechnical Stability: The analysis of geotechnical stability in the 2000 TEE was based on the total volume of sludge to be directly disposed and the cessation of mill tailings disposal. Because (1) even with the extension, the total volume of sludge that would be directly disposed of is less than half anticipated in 2000, and (2) mill tailings disposal has already ceased, the current proposal to extend direct sludge disposal does not change the 2000 TEE conclusion that there are no significant impacts to geotechnical stability.

Transportation: The transportation analysis in the 2000 TEE was based on two trucks per day transporting sludge from the mill to the mine. The actual truck volume between 2001 and 2008 was one truck per day. The extension proposal anticipates one truck per day transporting sludge from the mill to the mine during MMWTP operation. Because (1) no changes have been made to the procedures for sludge transport and (2) the anticipated frequency of sludge transport will be even less than evaluated in 2000, the current proposal to extend sludge disposal does not change the 2000 TEE conclusion that there are no significant transportation impacts.[14]

Water Quality: The water quality analysis in the 2000 TEE was based on the potential for mobility of uranium and other constituents from the unprocessed sludge. Because (1) the total volume of directly disposed sludge is significantly less than evaluated in 2000 and (2) the composition of the sludge has not changed, the current proposal to extend sludge disposal does not change the 2000 TEE conclusion that there are no significant impacts to water quality.

---

[10] See Dawn Mining Company 2005 Environmental Monitoring Report, submitted to WDOH May 31, 2006.
[11] See Dawn Mining Company 2006 Environmental Monitoring Report, submitted to WDOH May 31, 2007.
[12] See Dawn Mining Company 2007 Environmental Monitoring Report, submitted to WDOH May 31, 2008.
[13] See Dawn Mining Company records.
[14] The 2000 TEE transportation analysis was not specifically based on a limited number of years of sludge transport. Moreover, it is important to note that the sludge will need to be trucked from the Midnite Mine to a disposal location much more distant than TDA-4 if the sludge disposal extension is not granted.

Air Emissions: The 2000 TEE concluded that the moist condition of the sludge presented no air emissions issues. Because the composition of the sludge has not changed, the current proposal to extend sludge disposal does not change the 2000 TEE air emissions analysis.

Biota: The 2000 TEE biota analysis was based on the procedures for sludge disposal and the moisture content of the sludge. Because neither of these has changed, the current proposal to extend sludge disposal does not change the 2000 TEE conclusion that there are no significant impacts to biota.

Timing: The 2000 TEE timing analysis was based on earlier decommissioning and disposal of mill buildings, and an earlier cleanup of contaminated soils and closure of TDA-4, which could possibly accelerate the evaporation schedule and, in turn, shorten the closure timeline by approximately one year. To date, the mill has already been decommissioned and the mill buildings disposed. The earlier cleanup of contaminated site soils has begun. The IPS closure timeline reflects the earlier closure of TDA-4. As the discussion Attachment 1 demonstrates, the extension of sludge disposal will not interfere with the closure schedule of TDA-4. As a result, the current proposal to extend sludge disposal does not change the 2000 TEE timing analysis.

Radiation: The 2000 TEE radiation analysis was based on the fact that direct sludge disposal would contribute an insignificant amount of radiation in comparison to the amount allowed under the 11.e(2) byproduct material closure plan. Because, even with the extension, Dawn will dispose of less than half of the volume of sludge that was evaluated in the 2000 TEE, the current proposal to extend sludge disposal does not change the 2000 TEE analysis of radiation impacts. See also Attachment 1 at 3-4.

Regulations: The 2000 TEE based its regulatory analysis on the composition of the MMWTP sludge, as well as the finding that the final radon barrier over TDA-4 would not be delayed by direct sludge disposal. Since the composition of the sludge has not changed and the final radon barrier will not be delayed by an extension of direct sludge disposal, the current proposal to extend sludge disposal does not change the 2000 TEE regulatory analysis. For a detailed discussion, see Attachment 1.

B. The Proposal to Extend Sludge Disposal Satisfies the NRC Guidance Criteria

Dawn's proposal to extend direct disposal of MMWTP sludge into TDA-4 also satisfies the criteria set forth in the NRC Guidance.

NRC Criterion 1: In reviewing licensee requests for the disposal of wastes that have radiological characteristics comparable to those of the Atomic Energy Act (AEA) of 1954, Section 11e.(2) byproducts material [hereinafter designated as "11e.(2) byproduct material"] in tailings impoundments, staff will follow the guidance set forth [in the criteria] below. Since mill tailings impoundments are already regulated under 10 CFR Part 40, licensing of the receipt and disposal of such material [hereinafter designated "non-11e.(2) byproduct material"] should also be done under 10 CFR Part 40.

2000 TEE Response to Criterion 1: "[T]he MMWTP sludge comes from the same source as the byproduct material that was produced during the milling operations and discharged into TDA-4. It is a filtercake similar in physical form to the mill-produced byproduct material, and contains the same chemical and radiological elements. Staff have followed the NRC guidance criteria and applied the state equivalent of Appendix A to 10 CFR Part 40, WAC 246-353, to the request." 2000 TEE at 12.

Direct Sludge Disposal Extension Proposal: The character and composition of the sludge remain the same as that evaluated in the 2000 TEE. It is similar to the 11.e(2) byproduct material already present in TDA-4. As a result, the current proposal to extend sludge disposal continues to satisfy Criterion 1 of the NRC Guidance.

NRC Criterion 2: Radioactive material not regulated under the AEA shall not be authorized for disposal in an 11e.(2) byproduct material impoundment.

2000 TEE Response to Criterion 2: "Prior to regulatory oversight of the MMWTP by WDOH, an evaluation was done of the filtercake material, and it was determined that it met the federal and state definition of source material. Therefore, it is regulated under the AEA." 2000 TEE at 13.

Direct Sludge Disposal Extension Proposal: The character and composition of the sludge remain the same as that evaluated in the 2000 TEE. It is source material. As a result, the current proposal to extend sludge disposal continues to satisfy Criterion 2 of the NRC Guidance.

Criterion 3: The material proposed for disposal may not be special nuclear material or 11.e(1) material.

2000 TEE Response to Criterion 3: "As stated in the response to Criterion 2, the MMWTP sludge is source material, and therefore is neither special nuclear material nor 11.e(1) material." 2000 TEE at 13.

Direct Sludge Disposal Extension Proposal: The character and composition of the sludge remain the same as that evaluated in the 2000 TEE. It is neither special nuclear material nor 11.e(1) material. Therefore, the current proposal to extend sludge disposal continues to satisfy Criterion 3 of the NRC Guidance.

Criterion 4: The material proposed for disposal must not be subject to applicable RCRA regulation or other EPA standards for hazardous or toxic waste disposal. The material may not contain material classified as hazardous waste under 40 CFR 261, nor may it contain material regulated under TSCA.

2000 TEE Response to Criterion 4: "In June 1992, the Department of Ecology concurred with DMC's assessment that the MMWTP sludge was not dangerous waste. The Department of Ecology evaluated the MMWTP sludge again in April 2000, and again concurred with DMC's assessment that it is not dangerous waste (WDOE). The analyses of the constituents of the MMWTP sludge demonstrate that it contains no other material implicated by this criterion." 2000 TEE at 13.

Direct Sludge Disposal Extension Proposal: The character and composition of the sludge remain the same as that evaluated in the 2000 TEE. Moreover, the TDA-4 Sludge Disposal Operations Procedures include monitoring procedures that continue to confirm that the sludge is neither dangerous nor hazardous waste. See DMOP 18. The current proposal to extend sludge disposal continues to satisfy Criterion 4 of the NRC Guidance.

Criterion 5: The 11.e(2) licensee must demonstrate that there are no CERCLA issues related to the disposal of the non-11.e(2) byproduct material in the tailings impoundment.

2000 TEE Response to Criterion 5: "The purpose of the NRC guidance provision is to reduce the potential for regulatory oversight of the tailings impoundment by more than one agency, in relation to the eventual transfer of the site to the Department of Energy. WDOH does not consider the guidance provision to require that the licensee demonstrate that there are no CERCLA issues related to the site whatsoever. Rather, the analysis of the CERCLA issues should be whether or not the disposal of source material into TDA-4 raises any new or different CERCLA issues than those that already exist. The 1994 Final Supplemental EIS (WDOH 1994) recognizes that both CERCLA and MTCA authorities are available to address remediation of the site. Thus, CERCLA issues related to the millsite already exist. There is no indication that the disposal of source material into TDA-4 raises any new CERCLA issues. EPA has stated that is has no present intention of regulating TDA-4 under CERCLA (EPA)." 2000 TEE at 14.

Direct Sludge Disposal Extension Proposal: The character and composition of the sludge remain the same as that evaluated in the 2000 TEE. Moreover, the total amount of sludge that would be placed into TDA-4 even with the extension is less than half of that evaluated in the 2000 TEE. Consequently, no new CERCLA or MTCA issues are raised by Dawn's proposal to extend sludge disposal. Criterion 5 of the NRC Guidance continues to be satisfied.

Criterion 6: The 11.e(2) licensee must demonstrate that there will be no significant environmental impacts from disposing of the non-11e.(2) byproduct material.

2000 TEE Response to Criterion 6: "WDOH's review, provided in this document [the 2000 TEE], has determined that the direct disposal of MMWTP

sludge into TDA-4 would not involve substantial changes and/or new information indicating probable significant adverse environmental impacts that were not adequately evaluated in existing environmental reviews (WDOH 1981, 1991, 1992a, and 1994)." 2000 TEE at 14

Direct Sludge Disposal Extension Proposal: The character and composition of the sludge remain the same as that evaluated in the 2000 TEE. The same transportation and disposal procedures will be used. Moreover, the total amount of sludge that would be placed into TDA-4 even after an extension is less than half of that evaluated in the 2000 TEE. As discussed above in section IV.A., there is no significant change from the environmental analysis conducted in the 2000 TEE. As a result, the current proposal to extend sludge disposal continues to satisfy Criterion 6 of the NRC Guidance.

Criterion 7: The proposed disposal will not compromise the reclamation of the tailings impoundment by demonstrating compliance with the criteria of Appendix A of 10 CFR Part 40 (WAC 246-252-030).

2000 TEE Response to Criterion 7: "WDOH's review, provided in this document [the 2000 TEE], has determined that the direct disposal of MMWTP sludge into TDA-4 would not compromise the reclamation of the tailings impoundment, and is consistent and complies with Washington's equivalent to Appendix A 10 CFR Part 40, WAC 246-252 (WDOH 1997)." 2000 TEE at 14.

Direct Sludge Disposal Extension Proposal: As the discussion in the attached "Extension of Direct Sludge Disposal and Millsite Closure" demonstrates, an extension of direct sludge disposal will not compromise the reclamation of the tailings impoundment, and is consistent and complies with the millsite closure criteria set forth in WAC 246-252-030. See Attachment 1.

Criterion 8: The 11.e(2) licensee must provide documentation showing approval by the Regional Low-Level Waste Compact, as well as approval by the Compact in whose jurisdiction the disposal site is located.

2000 TEE Response to Criterion 8: "The Northwest Compact's decision is pending completion of WDOH's review of DMC's request and presentation of WDOH's findings to the Compact committee. Before WDOH would amend the DMC's radioactive materials license to allow direct discharge, final approval must be given." 2000 TEE at 15.

Direct Sludge Disposal Extension Proposal: On August 4, 2000, the Compact sent a letter to Dawn documenting that the Compact had unanimously adopted a motion stating it had no objections to Dawn's proposal. See Letter from Lawrence Goldstein, Chair of the Northwest Interstate Compact, to David Delcour, Dawn Mining Company (August 4, 2000). Dawn's proposal to extend direct disposal is essentially the same as that approved by the Compact in 2000. The character and composition of the sludge remain the same as that evaluated in

2000. The same transportation and disposal procedures would be used. Moreover, the total amount of sludge that would be placed into TDA-4 even after an extension is less than half of that evaluated in 2000. As a result, the Compact's 2000 letter stating it has no objections to the direct sludge disposal plan could be considered applicable to Dawn's proposal to extend sludge disposal. However, WDOH has stated that it will seek approval from the Compact before granting Dawn's extension request. Dawn will assist WDOH in this effort.

Criterion 9: The Department of Energy (USDOE) is to be informed of the NRC's (or agreement state's) findings and proposed actions, with a request to concur within 120 days. A concurrence and commitment from either the USDOE or the State to take title to the tailings impoundment after closure must be received before granting the license amendment to the licensee.

2000 TEE Response to Criterion 9: "U.S. DOE's decision is pending receipt of the completed Technical and Environmental Evaluation, and a request from WDOH for a determination that the implementation of DMC's proposal would not interfere with the transfer of ownership to U.S. DOE. WDOH would not amend DMC's radioactive materials license to allow direct discharge, without written concurrence from U.S. DOE." 2000 TEE at 15.

Direct Sludge Disposal Extension Proposal: On March 29, 2001, the USDOE sent a letter to WDOH in which it stated that it had no objection to the direct disposal of the sludge into TDA-4. See Letter from Donna Bergman-Tabbert, USDOE (Grand Junction Office) to Gary Robertson, WDOH (March 29, 2001). The 2007 Addendum states that "Any extension of sludge disposal would require not only the department's approval but also that of the U.S. Department of Energy and the U. S. Nuclear Regulator Commission." 2007 Addendum at 2. Dawn will assist WDOH in the effort to secure the concurrences of the NRC and the USDOE.

Criterion 10: The mechanism to authorize the disposal of non-11.e(2) byproduct material in a tailings impoundment is an amendment to the mill license. Along with the license amendment, the agreement state must also take appropriate action to exempt the non-11.e(2) byproduct material from regulation as a low-level waste.

2000 TEE Response to Criterion 10: "WDOH's review, provided in this document [the 2000 TEE], has determined that direct disposal of MMWTP sludge into TDA-4 would be consistent and in compliance with WAC 246-252. TDA-4 was constructed in compliance with 10 CFR Part 40 criteria, and since the sludge material has been demonstrated to be very similar to the tailings, it is acceptable for disposal into TDA-4. In addition, direct disposal would not involve substantial changes and/or new information indicating probable significant adverse environmental impacts that were not adequately evaluated in the existing EIS/SEIS. Protection of public health and the environment does not require application of the requirements of WAC 246-250, the state equivalent of 10 CFR

Part 61. Therefore, direct disposal of the sludge should be exempted from WAC 246-250. If the license is amended to allow direct disposal of the sludge, an exemption will be granted." 2000 TEE at 15.

Direct Sludge Disposal Extension Proposal: After receiving concurrence from the NRC, see Letter from Paul Lohaus, NRC Office of State and Tribal Programs, to Gary Robertson, WDOH (December 14, 2000), the WDOH approved Dawn's proposal and amended Dawn's radioactive materials license in 2001 to allow for direct sludge disposal into TDA-4. WDOH amended Dawn's radioactive materials license again in 2007, authorizing direct sludge disposal through 2008 and providing that direct sludge disposal could be extended with WDOH approval. See Condition 33, Radioactive Materials License #WN-I043-2, Amendment 24. Because Dawn's license anticipates that the time frame for such disposal may be extended, no further amendment to Dawn's license is necessary.

V. Conclusion

Dawn's proposal to extend the direct disposal of MMWTP sludge into TDA-4 for as long as TDA-4 is open and available for such disposal is essentially the same as that evaluated and approved by the WDOH in 2000. The current proposal continues to satisfy all the necessary regulatory and NRC Guidance criteria and poses no significant environmental impacts. Continued sludge disposal in TDA-4 will not interfere with any millsite closure activities and will not interrupt or delay the closure of TDA-4.

Thank you for considering Dawn's request for an extension of direct sludge disposal. Dawn would like to offer its help in any way that would assist WDOH in its review and evaluation of this sludge disposal extension request. If you have any questions, please do not hesitate to contact me at (509) 258-4511.

Sincerely,

DAWN MINING COMPANY, LLC

Robert E. Nelson
Vice President & General Manager

Attachment

xc: Dorothy Stoffel, WDOH
file

ATTACHMENT 1:
EXTENSION OF DIRECT SLUDGE DISPOSAL AND MILLSITE CLOSURE

Background. The initial proposal for direct disposal of Midnite Mine Water Treatment Plant (MMWTP) sludge was developed by the Dawn Mining Company (DMC) and presented in the Integrated Project Schedule (IPS) submitted to Washington Department of Health (WDOH) in November 1999. The direct disposal proposal was based on a projected five-year period, 1999 through 2004, of MMWTP operation during which MMWTP sludge would be disposed directly in TDA-4. At that time, DMC did not anticipate the need to dispose of sludge beyond 2004 and believed that the plan for mine water treatment through 2004 was sufficient for removal of mine pit water and residual seepage at the Midnite Mine. The estimates of the sludge production volumes were based on: (1) two years of MMWTP operation at approximately 100% treatment capacity, treating mine water in Pit 3, Pit 4, and water collected in the backfilled pits; and (2) three years of MMWTP operation at 50% capacity, treating residual seepage and meteoric water collected in the open pits, backfilled pits, and the pollution control pond (PCP) collection system.

For the purpose of evaluating DMC's proposal, WDOH assumed direct disposal of MMWTP sludge through 2008 which, according to the millsite closure timeline submitted with the 1999 IPS, was how long TDA-4 would be available for such disposal. WDOH approved DMC's proposal for direct disposal of MMWTP sludge into TDA-4 in the 2000 Addendum to Existing Environmental Documents. After issuance of Amendment 23 of DMC's Radioactive Materials License, direct disposal of MMWTP sludge to begin in 2001. Amendment 24 of DMC's license, issued in 2007, allows DMC to continue to directly dispose of MMWTP sludge into TDA-4 through the end of 2008.

Pursuant to the EPA's Unilateral Administrative Order and Statement of Work for Water Treatment and Sludge Disposal at Midnite Mine Superfund Site (EPA, November 7, 2008), DMC is required to continue operation of the MMWTP and disposal of the sludge. While DMC explores other sludge disposal options, Dawn seeks the approval of WDOH to continue direct disposal of sludge into TDA-4 for as long as TDA-4 is scheduled to remain open and available for such disposal. Such an extension of sludge disposal will not affect

the timing for overall DMC millsite closure and closure of TDA-4 specifically. The basis for this conclusion is discussed in this attachment.

MMWTP operation and sludge volumes. Appendix I.3.4 of the 1999 IPS estimated that the sludge volume produced during the initially proposed five-year period of MMWTP operation (1999-2004) would total of approximately 0.50 million cubic feet. This total was based on two years of sludge production at full MMWTP capacity, followed by three years at 50 percent capacity. This volume of sludge, 0.50 million cubic feet, would be approximately 3 percent of the total volume of material that would be placed in TDA-4 under clean fill operations (excluding the cover). WDOH evaluated and approved of the direct sludge disposal proposal based on the total volume of sludge that would be placed into TDA-4 if sludge production and disposal continued through 2008. Adding another four years of sludge production at 50 percent capacity resulted in an estimated total sludge volume of about 0.75 million cubic feet that would be placed in TDA-4 under clean fill operations.

The volume of MMWTP sludge actually placed directly in TDA-4 since 2001 is approximately 235,000 cubic feet. This volume is less than one half of the initially estimated amount, less than one third of the volume estimated to be placed into TDA-4 through 2008, and comprises approximately 1.5 percent of the total volume of material currently stored in TDA-4. Based on MMWTP operations and actual sludge volumes produced and placed in TDA-4 since 2001, the volume of sludge that could be disposed of in TDA-4 during the remaining time that TDA-4 is scheduled to be open and available is expected to be no more than 90,000 cubic feet. Sludge would only be accepted in TDA-4 as long as TDA-4 is open and available and such that disposal would not affect the scheduled TDA-4 closure plan. This extended period of sludge disposal would result in a total sludge volume in TDA-4 of no more than 325,000 cubic feet, which is 2 percent of the total volume of material in TDA-4 (as of the end of 2008), and less than half of the volume evaluated and approved by WDOH in 2000.

Sludge disposal and TDA-4 reclamation. Extending the period of direct disposal of MMWTP sludge for as long as TDA-4 remains open and available would not affect the

reclamation and closure of TDA-4 or modify overall millsite closure under clean fill operations as described in the 2008 IPS. In 2009, contaminated site soil and general fill material are scheduled to be placed in TDA-4 to bring the eastern portion of TDA-4 to a level and grade required for overliner placement that year, and to stabilize the surface of the western portion of TDA-4 in preparation for overliner placement in 2010. In 2009, following placement of fill material, the overliner is scheduled to be placed over the eastern portion of TDA-4. In 2010, additional contaminated site soil, contaminated debris from demolition of the remaining millsite structures, and general fill material are scheduled to be placed in the western portion of TDA-4 to bring the surface of TDA-4 up to the level required for placement of the overliner. A small area in the overliner on the western portion of TDA-4 is scheduled to remain open to accommodate disposal of contaminated material that may be discovered during final soil cleanup activities. It is expected that this area of TDA-4 will be closed in 2011. Construction of reclamation cover over TDA-4 is expected to be done in 2012.

As discussed above, a portion of TDA-4 is scheduled to remain open until late 2010 to receive relatively large volumes of contaminated site soil and demolition debris, therefore disposal of additional MMWTP sludge in TDA-4 during this time will not impact the timing of TDA-4 closure and final reclamation.

Millsite water balance. An extension of sludge disposal in TDA-4 through the period of time that TDA-4 remains open and available and such that it does not alter the scheduled TDA-4 closure plans will not affect the overall water balance at the millsite. The volume of water collected in TDA-4 and pumped to the evaporations ponds is expected to be minimal in 2009 and 2010 (but will depend on actual climatic conditions). As described above, and as presented in the 2008 IPS, the western portion of TDA-4 is scheduled to remain open until late 2010 to receive contaminated site soil and demolition debris, as well as additional fill, prior to placement of the overliner over this area. Therefore, there will be a location for placement of MMWTP sludge in the western portion of TDA-4 and the additional volume of sludge will not alter material placement plans or grading for the overliner.

TDA-4 cover design. The cover design will not be affected by placement of additional MMWTP sludge in TDA-4. As discussed in Appendix C.2.2 of the IPS, the calculated cover thickness over TDA-4 for radon attenuation is based on a zone of contaminated millsite soils and stabilizing fill over tailings. The MMWTP sludge would be within this zone. The radium-226 activity concentration of the contaminated millsite soils used in the cover design calculations is estimated to be 51 pCi/g (the average value for the materials in the millsite area). The radium-226 activity concentration of the tailings used in the cover design calculations is 596 pCi/g based on the average value from ore grade calculations. The radium-226 activity concentration of the MMWTP sludge is 17 pCi/g (from Appendix I.3.4 of the IPS). Due to the low radium-226 activity concentration of the sludge, only the tailings and contaminated soils were used in the radon attenuation calculations.

The increase in radium-226 activity concentration in the sludge with time due to decay of uranium-238 was evaluated. This evaluation incorporated the decay of radium-226 as well as the in-growth of radium-226 from uranium-238 and thorium-230. The results show that after 100 years, the radium-226 activity concentration of the sludge would increase from approximately 17 pCi/g to 18 pCi/g. After 1000 years, the radium-226 activity concentration of the sludge would increase to approximately 43 pCi/g. The estimated radium-226 activity concentration in the sludge for the maximum regulatory design period of 1000 years is less than the contaminated millsite soil value (51 pCi/g). Therefore the cover design calculations in Appendix C of the IPS using the radium activity concentration of the contaminated millsite soils conservatively represent the materials beneath the cover in TDA-4. Placement of additional sludge in TDA-4 would not require modification of the cover design calculations.

WAC 246-252-030. Each of the criterion in WAC 246-252-030 is discussed below with regard to the direct disposal amendment request.

Criterion 1: Site Selection. The DMC millsite is located in a rural area of eastern Washington and the reclamation design demonstrates that TDA-4 will be permanently isolated from humans and the environment as required by this criteria. An extension of direct disposal of MMWTP will not alter this condition and thus achieves this criterion.

Criterion 2: Proliferation of Small Waste Sites. DMC seeks to dispose of MMWTP sludge in its existing tailings disposal site. Such action does not establish a new waste disposal site.

Criterion 3: Below Grade Disposal. The prime option for disposal of tailings is a below grade disposal impoundment. TDA-4 meets this criterion. An extension of direct disposal of MMWTP sludge will not alter this condition and thus achieves this criterion.

Criterion 4: Closure. Direct disposal of MMWTP sludge in TDA-4 is proposed for the period of time that TDA-4 is scheduled to remain open and such that it does not affect the timing of scheduled closure plans. The closure plan design presented in the IPS for TDA-4, as well as the other three TDAs, has been analyzed and shown to meet all the performance criteria for tailings disposal facilities. An extension of direct disposal of MMWTP in TDA-4 is only proposed for the period of time that TDA-4 remains available and provided that sludge disposal does not affect currently scheduled closure plans for TDA-4 as well as the remainder of the DMC millsite.

Criterion 5 and Criterion 13: Groundwater Protection. TDA-4 meets these criteria and the closure plan for the millsite has also been demonstrated to meet these criteria. An extension of direct disposal of MMWTP sludge will not alter achievement of these criteria.

Criterion 6: Radon Control. An extension of direct disposal of MMWTP sludge during the period of time that TDA-4 is scheduled to remain open and available does not affect achievement of this criterion. The reclamation design presented in the IPS demonstrates adequate cover performance with regard to radon attenuation.

Criterion 7: Monitoring. DMC's ongoing environmental monitoring program meets this criterion and is not affected by direct disposal of MMWTP sludge.

Criterion 8: Milling Operations. This criterion requires milling operations to be conducted so that all airborne effluent releases are reduced to As Low As Reasonably Achievable (ALARA). The mill was closed in 2001 and thus achieves this criterion.

Criterion 9: Financial Surety. This criterion does not apply to direct disposal of MMWTP sludge. However, updated surety cost estimates have been presented in the IPS, based on the proposed closure plan.

Criterion 10: Long-term Surveillance Bond. This criterion does not apply to direct disposal of MMWTP sludge. However, this item is included in the updated surety cost estimates presented in the IPS.

Criterion 11: Ownership. DMC's sludge disposal extension request presents a detailed discussion of how the proposed extension of direct disposal of MMWTP sludge meets each of the criteria presented in the NRC Final Revised Guidance on Disposal of Non-Atomic Energy Act of 1954, Section 11e.(2) Byproduct Material in Tailings Impoundments. By meeting these NRC criteria, direct disposal would not affect site ownership or transfer issues.

Criterion 12: On-going Maintenance. An extension of direct disposal of MMWTP sludge does not affect the reclamation cover design for the DMC millsite. The reclamation design presented in the IPS has been shown to meet all the reclamation requirements for tailings disposal facilities.

Attachment 2
Letters of Concurrence from U.S. Nuclear Regulatory Commission, U.S. Department of Energy, and the Northwest Interstate Compact for Extension of Sludge Disposal in TDA-4

09-04-01 ME/GR

UNITED STATES
NUCLEAR REGULATORY COMMISSION
WASHINGTON, D.C. 20555-0001

RECEIVED
APR 03 2009
OFFICE OF RADIATION PROTECTION

March 27, 2009

Gary L. Robertson, Director
Office of Radiation Protection
111 Israel Road, SE
P.O. Box 47827
Olympia, WA 98504-7827

Dear Mr. Robertson:

I am responding to the February 12, 2009, letter from Mikel Elsen, Supervisor, Waste Management Section, to Dennis Sollenberger, Senior Health Physicist, in which the State of Washington requested the U.S. Nuclear Regulatory Commission (NRC) review the State of Washington's evaluation of Dawn Mining Company's (DMC's) request to extend the date of disposal of mine water treatment sludge (source material) into a tailings (11e.(2) byproduct material) disposal cell at the DMC mill site. The December 14, 2000, letter from Paul Lohaus concluded that the State had appropriately followed the NRC guidance, entitled, "Final Revised Guidance on Disposal of Non-Atomic Energy Act of 1954, Section 11e. (2) Byproduct Material In Tailings Impoundments," as published in the September 22, 1995 Federal Register. The NRC revised the guidance and issued it as part of a Regulatory Issues Summary (RIS) entitled, "Recent Changes to Uranium Recovery Policy," dated November 30, 2000.

We have completed our review of your submittal. Based on our review, we have concluded the State of Washington has considered the appropriate technical issues to authorize a continuation of the disposal of limited source material in the tailings impoundment at the DMC mill site through December 31, 2010. We agree that the time extension is consistent with the NRC guidance for conducting this activity.

If you have any questions concerning our response, please contact me at 301-415-3340 or Dennis Sollenberger at 301-415-2819.

Sincerely,

Robert J. Lewis, Director **/RA/**
Division of Materials Safety and State Agreements
Office of Federal and State Materials and
Environmental Management Programs

cc: Mikel Elsen

RECEIVED
MAR 10 2009
OFFICE OF RADIATION PROTECTION

Department of Energy
Office of Legacy Management

MAR - 4 2009

Mikel J. Elsen, Supervisor
Waste Management Section
Office of Radiation Protection
State of Washington Department of Health
111 Israel Road, SE
P.O. Box 47827
Olympia, WA 98504-6388

Dear Mr. Elsen:

This letter is in response to your request for the Department of Energy (DOE) concurrence for the further disposal of Midnite Mine sludge wastes at the Ford, Washington, Uranium Mill Tailings Radiation Control Act site operated by Dawn Mining Company, dated February 12, 2009. The DOE previously (2001) had concurred with the initial request for the disposal of wastes originating from the Midnite Mine treatment plant as sludge similar in nature to the UMTRCA tailings already being disposed by Dawn Mining at the site.

In reviewing your request dated February 12, 2009 and the Technical Evaluation Report (TER) of the State of Washington Department of Health, DOE is in concurrence with the request. It is the understanding of DOE that the disposal of additional material will take place during the extended license period to end December 31, 2010, and that the amount of material will be somewhat less than that originally projected for such disposal in the initial request. It is also the understanding of DOE that this amendment will be granted by the State Department of Health upon concurrence of DOE, the Nuclear Regulatory Commission (NRC), and the Northwest Regional Low-Level Radioactive Waste Compact. The DOE agrees with State assessment that this request continues to fulfill the 10 requirements of the NRC guidance for the disposal of non 11.e(2) wastes as cited in the TER as reviewed. The DOE also agrees that this action is already covered under the existing Environmental Policy Act evaluation previously performed and will not require a supplemental review.

Sincerely,

Richard P. Bush
Site Manager

2597 B 3/4 Road, Grand Junction, CO 81503	☐	3600 Collins Ferry Road, Morgantown, WV 26505
1000 Independence Avenue, S.W., Washington, DC 20585	☐	11025 Dover Street, Suite 1000, Westminster, CO 80021
10995 Hamilton-Cleves Highway, Harrison, OH 45030	☐	955 Mound Road, Miamisburg, OH 45342
232 Energy Way, N. Las Vegas, NV 89030	☐	
REPLY TO: Grand Junction Office		

cc:
A. Blado, State Assistant Attorney General
M. Garner, Northwest Low-Level Waste Compact
S. Miller, DOE GC
R. Peone, Spokane Tribe
G. Robertson, Washington Department of Health
D. Sollenberger, NRC
M. Widdop, Stoller (e)
File: FOR 000 (A) (Roberts)

bush/ford wa/mml request ltr to coe 2-09.doc

Northwest Interstate Compact
On Low-Level Radioactive Waste Management
P.O. Box 47600. Olympia, Washington 98504-7600. (360) 407-7102. Mike Garner, Executive Director

March 17, 2009

Mr. Mikel J. Elsen, Supervisor
Waste Management Section
Washington State Department of Health
Dawn Mining Company LLC
W. 505 Riverside, Suite 500
Spokane, Washington 99201

Dear Mr. Elsen:

Thank you for your February 12, 2009, letter stating it is the intention of the Washington State Department of Health to support a license amendment requested by Dawn Mining Company. The amendment request would extend authorization for the company to dispose of non-11.e(2) material, Midnite Mine water treatment plant sludge (source material), in Tailing Disposal Area 4 located at the company's mill site for a two year period.

Your letter states that with the two-year extension the total volume of treatment plant sludge will amount to only forty percent of the volume originally evaluated in 2000. The total radioactivity of the treatment plant sludge will amount to only thirty-three percent of the amount originally evaluated.

The Northwest Interstate Compact has no objections to the proposal to extend authorization allowing Dawn Mining Company to dispose of Midnite Mine water treatment sludge in Tailing Disposal Area 4 for two additional years.

Should you have any questions please contact Mike Garner at (360) 407-7102.

Sincerely,

Mike Garner

Mike Garner, Executive Director
Northwest Interstate Compact

cc: Northwest Compact Committee

Attachment 3
American Ecology Radioactive Material License

State of Washington

Radioactive Materials License

License Number: WN- I019-2

Pursuant to the Nuclear Energy and Radiation Control Act, RCW 70.98, and the Radiation Control Regulations, chapters 246-220 through 246-255 WAC, and in reliance on statements and representations heretofore made by the licensee designated below, a license is hereby issued authorizing such licensee to transfer, receive, possess and use the radioactive material(s) designated below; and to use such radioactive materials for the purpose(s) and at the place(s) designated below. **This license is subject to all applicable rules and regulations** promulgated by the State of Washington Department of Health.

1. Licensee Name: US ECOLOGY WASHINGTON, INC.	**3. License Number:** WN-I019-2 **Amendment in Entirety** Amendment 36
2. Address: 1777 TERMINAL DRIVE RICHLAND, WASHINGTON 99354 Attn: Mike Ault, Facility Manager	**4. Expiration Date:** 31 January 2011 **5. Reference Number(s):**

6. Radioactive Material (element and mass number).	7. Chemical and/or Physical Form.	8. Maximum quantity licensee may possess at any one time.
6.A. Any radioactive material, excluding source material and special nuclear material.	7.A. Dry packaged radioactive waste except as authorized by this license.	8.A. 60,000 curies (2.22×10^{15} Bequerels).
6.B. Source material.	7.B. Dry packaged radioactive waste except as authorized by this license.	8.B. 36,000 kilograms.
6.C. Special Nuclear Material.	7.C. Dry packaged radioactive waste except as authorized by this license.	8.C. 350 grams of U^{235} or 200 grams of U^{233} or 200 grams of plutonium or any combination of these, provided the sum of the ratios of the quantities does not exceed unity.
6.D. Any radioactive material.	7.D. Check and calibration sources in any form.	8.D. 0.1 Curie (3.7×10^{9} Bequerels).

License Number: WN-I019-2

Amendment 36

CONDITIONS

9. Authorized use.

A-C Radioactive waste may be received, transferred, stored, repackaged, and disposed at a low-level radioactive waste disposal facility. The maximum radioactivity and/or quantity of radioactive material indicated in items 8.A, 8.B, and 8.C apply only to above-ground activity.

D. For use as check and calibration sources.

10. A. The licensee shall not receive for disposal any waste containing Ra-226, H-3, I-129, Tc-99, U-238, C-14, U-234, and Pu-239 once the following source term limits have been reached:

Radionuclide	Total Site Limit (Curies)
Ra-226	464.60
I-129	5.98
Tc-99	55.10
U-238	1,547.7
C-14	5,090.00
U-234	335.4
Pu-239	4,510.00

B. Commencing January 1, 2006, the licensee shall not receive for disposal, any waste containing H-3 in an unstable waste form once the following yearly source term limit has been reached:

Radionuclide	Yearly Limit (Curies)
H-3 (unstable waste form)	100.0 Curies

11. The authorized place of use is a low-level waste burial facility located in the southeast corner of Section 9, Township 12 North, Range 26E W.M., Benton County, Washington, Route 4 - U.S. DOE Hanford Reservation, Richland, Washington 99352, within the boundary of the land area described in Sublease Agreement with the state of Washington, dated July 29, 1965, as amended. For the purposes of this license, the authorized place of use shall be referred to as the "facility."

License Number: WN-I019-2

Amendment 36

12. Reference to the "department" in this license shall mean the Department of Health or successor agency.

13. A. The licensee shall notify the department in writing within 30 days of the appointment of a new Facility Manager, Assistant Facility Manager, Radiation Protection Manager, or Assistant Radiation Protection Manager, describing how the appointee meets or exceeds the minimum qualifications specified in the Facility Standards Manual.

    B. The licensee shall notify the department in writing 30 days prior to any change in the licensee's corporate structure.

14. Upon receipt of a shipment, the licensee shall furnish to the department copies of all shipment manifests received. The licensee shall furnish to the department, within 30 days of a specific written request, special reports consisting of selected information contained on shipment manifests. By the tenth day of each month, the licensee shall submit a report totaling the volume and activity of the waste received during the previous month. In addition, a monthly facility receipt and burial activities report shall be submitted by the licensee, no later than the fifteenth day of the following month to the Department of Health, Supervisor, Waste Management Section. The report shall include the following information for each shipment:

    A. Name and address of the generator(s), broker (if any), and shipper.

    B. Radionuclides and activity of each radionuclide in millicuries (total and by generator).

    C. Grams of special nuclear material (total and by generator).

    D. Mass (in kilograms) of source material received (total and by generator).

    E. Class totals of volume and activity of Class A, B, and C waste entrenched (total and by generator).

    F. Volume of packages disposed with radiation readings at the surface of the disposal container of:

≤50 mr/hr	>1 R/hr ≤10 R/hr
>50 mR/hr ≤200 mR/hr	>10 R/hr ≤100 R/hr
>200 mR/hr ≤1 R/hr	>100 R/hr

and to the extent practicable:

G. Type and physical form of the waste.

H. Chemical form of the waste and solidification/stabilization/sorption agent used.

I. If an Engineered Concrete Barrier (ECB), or High Integrity Container (HIC) was used (total and by generator).

J. Quantity and type of chelates in concentrations greater than 0.1 percent by weight (total and by generator).

K. Type of secondary containment used (if any).

L. Volume of diffuse Naturally Occurring or accelerator produced radioactive material received (total and by generator).

15. In addition to the record keeping requirements contained in WAC 246-250-600, the licensee shall maintain a record for each shipment of waste disposed at the facility. As a minimum, the record shall include:

A. The date of disposal of the waste.

B. The location of the waste in the disposal site.

C. The condition of the waste packages as received.

D. Any discrepancies between materials listed on the manifest and those received.

E. Any evidence of leaking or damaged packages or radiation or contamination levels in excess of limits specified in United States Department of Transportation and state of Washington regulations.

F. A description of any repackaging operations of any of the waste packages in the shipment.

G. Type of secondary containment used (if any).

License Number: WN-I019-2

Amendment 36

GENERAL PACKAGING CONDITIONS

16. All radioactive waste shall be packaged, loaded, received, and transported in accordance with all applicable U.S. Department of Transportation regulations, U.S. Nuclear Regulatory Commission regulations, state regulations, and the requirements of this license. Nothing in this license shall in any way relieve the licensee from full compliance with all applicable state and federal laws and regulations, including but not limited to the Resource Conservation and Recovery Act of 1976, as amended, and the State Hazardous Waste Management Statutes of 1976, as amended, and subsequently enacted regulations.

17. Unless otherwise authorized, the licensee shall not receive for disposal any mixed low-level radioactive waste. Mixed waste is defined as any radioactive material which is no longer of use or value, and contains waste that either (A) is listed as dangerous waste in the state's Dangerous Waste Regulations, (B) causes the waste to exhibit any of the dangerous waste characteristics identified in the state's Dangerous Waste Regulations, (C) fulfills any of the "dangerous waste criteria" identified in the state's Dangerous Waste Regulations, (D) listed as hazardous waste in Subpart D, 40 CFR Part 261, or (E) causes the waste to exhibit any of the hazardous waste characteristics identified in Subpart C, 40 CFR Part 261.

18. Unless specifically authorized by the department, all radioactive waste shall be received and buried in closed containers. Cardboard, corrugated paper, wood, and fiberboard are prohibited burial containers.

19. All metal containers shall be secured by an intact heavy-duty closure device when presented for disposal. Closure devices of open-head metal drums having 55-gallons or greater capacity shall be secured by bolts having 5/8 inch or larger diameters. The shipper of any DOT 7A Type A container must maintain on file complete documentation of tests and an engineering evaluation or comparative data showing that the construction methods, packaging design, and materials of construction comply with that specification.

20. Radioactive waste shall be packaged in such a manner that waste containers received at the facility do not show:

    A. Significant deformation.

    B. Loss or dispersal of contents.

    C. An increase in the external radiation levels as recorded on the manifest, within instrument tolerances.

D. Degradation due to rust or other chemical action which results in a loss of container integrity.

21. Void spaces within the radioactive waste and between the waste and its package shall be reduced to the maximum extent practicable. Unless specifically approved by the department, void spaces within all waste packages shall be less than 15 percent of the total volume of the disposal package, provided the disposal package is not a high integrity container nor contains activated metals that are too large to put into high integrity containers. For Class B and Class C waste packages containing activated metals, voids shall be reduced to the extent practicable and shall be demonstrated to be structurally stable by any of the methods discussed in WAC 246-249-050(2)(a). This documentation shall be submitted to the department prior to disposal, and shall be kept on file by the licensee.

22. Waste shall not contain, or be capable of generating, toxic gases, vapors, or fumes during transportation, handling, or disposal.

23. No pyrophoric, hazardous, dangerous, or chemically explosive materials or materials which could react violently with water or moisture or when subject to agitation shall be accepted for disposal.

24. Waste or packaging shall not contain any liquid except as authorized by this license.

25. In order to keep doses as low as reasonably achievable (ALARA), the licensee shall not receive shipments of radioactive material unless appropriate lifting devices of sufficient length have been provided and securely attached to containers and palletized shipments within a cask.

26. The licensee shall not accept radioactive waste unless each waste package has been:

A. Classified in accordance with Appendix A of this license and the most recent version of the "Low-Level Waste Licensing Branch Technical Position on Radioactive Waste Classification," issued May 1983 by the U.S. Nuclear Regulatory Commission.

B. Marked as either Class A stable, Class A unstable, Class B, or Class C, as defined in Appendix A of this license and the most recent version of the "Low-Level Waste Licensing Branch Technical Position on Radioactive Waste Classification," issued May 1983 by the U.S. Nuclear Regulatory Commission.

C. Marked with a unique package identification number, clearly visible on the package, that can be correlated with the manifest for that particular shipment.

D. Stabilized, when required by this license, in accordance with criteria contained in the most recent version of the "Technical Position on Waste Forms," issued May 1983 by the U.S. Nuclear Regulatory Commission, and procedures that are described in approved vendor topical reports. Only those stabilization media approved by the department and listed in Appendix C to this license, or High Integrity Containers approved by the department and listed in Appendix D to this license may be used. Stability may also be achieved using engineered barriers in the disposal unit. Specific approval by the department is required prior to construction of any newly designed or redesigned engineered barrier. Only those engineered barriers listed in Appendix E of this license are approved for use at the facility.

27. The classification and package identification marking required by Condition 26 is in addition to any marking or labeling required by U.S. NRC or U.S. DOT, and shall consist of lettering 1/2 inch high or greater in a durable contrasting color to the background surrounding the lettering. The classification marking shall be visible on the same side as the radioactive marking or label and in close proximity (within six inches). Waste packages marked "Radioactive," "Limited Quantity," or "Radioactive LSA" need only one classification marking, whereas waste packages labeled White I, Yellow II, or Yellow III shall have classification markings in close proximity (within six inches) to each label. Waste materials shipped in casks shall have the classification markings visible on the outside of the cask.

28. The licensee may possess SNM that has not been disposed of at the facility, subject to the following restrictions and all other conditions of this license:

A. No single package shall contain more than 100 grams of U-235, or 60 grams of U-233, or 60 grams of Pu, or any combination thereof, such that the sum of the ratios of the quantity of each SNM radionuclide to the quantities specified herein exceeds unity. Compliance with this requirement shall be determined by the following formula:

$$\frac{\text{grams containing U-235}}{100} + \frac{\text{grams containing U-233}}{60} + \frac{\text{grams containing Pu}}{60} = <1$$

B. No single package shall contain more than 15 grams of any combination of U-235, U-233, and Pu, per cubic foot of the total volume. To the extent practicable, the SNM will essentially be uniformly distributed throughout the waste package.

License Number: WN-I019-2

Amendment 36

SPECIFIC WASTE FORM REQUIREMENTS

29. Except as allowed under this license, untreated liquids and wet sludges are not allowed for disposal. Liquids shall be rendered non-corrosive (4≤ pH ≤11) prior to treatment. Acceptable treatments are stabilization or solidification, depending on waste class. Wet sludges and slurries, such as evaporator bottoms, shall be non-corrosive and shall be treated by stabilization or solidification. Ion exchange media shall not be treated by sorption.

30. Liquids, ion exchange resins, or filter media treated by stabilization shall be processed in accordance with a process control program using an approved stabilization medium (see Appendix C). The resulting waste form shall contain no detectable free-standing liquid and shall meet the stability requirements of Condition 26. "No detectable free-standing liquid" is defined to be as little free-standing and noncorrosive liquid as is reasonably achievable, but in no case shall the liquid exceed 1.0% of the volume of the waste when the waste is in a disposal container designed to ensure stability, or 0.5% of the volume of waste processed to a stable form.

31. Liquids treated by solidification shall be processed in accordance with a process control program using an approved solidification medium (see Appendix B). The resulting waste form shall contain no detectable free-standing liquid. "No detectable free-standing liquid" is defined to be as little liquid as is reasonably achievable, but in no case shall it exceed more than 0.5 percent (by volume) of liquid per container.

32. Except as specifically provided in this license, the licensee shall not accept for disposal, any liquid radioactive waste packaged in sorbent material.

33. Incidental and unintentional liquids entrained in solid material may be received, provided that:

    A. (1) The dry material contains less than 0.1 volume percent of liquid within the package, or

    (2) If a process control program (PCP) is used to verify the amount of liquids, the dry material must contain less than 0.5 volume percent of liquids within the package and;

    B. Sufficient approved sorbent material (see Appendix F) is used and layered to absorb the incidental and unintentional liquids.

License Number: WN-I019-2

Amendment 36

34. Waste containing biological (excluding animal carcasses, which are considered in Condition 35), pathogenic, or infectious material or equipment (e.g., syringes, test tubes, capillary tubes) used to handle such material, shall be treated to reduce, to the maximum extent practicable, the potential hazard from the non-radiological materials. The inner waste container shall be a metal container meeting DOT 7A performance specifications (see Condition 19) and shall be lined with a minimum 4 mil plastic liner which shall be sealed. The inner waste container shall be placed in an outer metal container meeting DOT 7A performance specifications with a heavy duty closure device (see Condition 19) and shall have a capacity at least 40 percent greater than the inner container. The void between inner container and outer container shall be completely filled by approved sorbent material and the outer container must be sealed. Only sorbents approved by the department shall be allowed (see Appendix F).

35. Animal carcasses containing, or contained in, radioactive materials shall be packaged in accordance with the following requirements: the biological material shall be layered with absorbent and lime and placed in a metal container meeting DOT 7A performance specification, having a heavy duty closure device (see Condition 19). The inner container shall be closed and placed in a metal container meeting DOT 7A performance specification with a heavy duty closure device, having a capacity at least 40 percent greater than the inner container. The void between the inner container and the outer container shall be completely filled by approved sorbent material and the outer container must be sealed. Only sorbents approved by the department (except Perlites) shall be used (see Appendix F).

36. Waste in gaseous form must be packaged at a pressure that does not exceed 1.5 atmospheres at 20^0C. Total activity shall not exceed 100 curies (3.7×10^{12} Bqs) per container. Class A gaseous waste shall be contained within U.S. DOT specification cylinders. Class A gaseous waste contained in hermetically sealed glass ampules, tubes, or sealed sources are exempt from the requirement for the specification cylinder provided that they are packaged in containers meeting DOT 7A specifications, having a heavy duty closure device (see Condition 19) and with sufficient sorbent material to prevent breakage and rupture of its contents. Specific approval of the department is required if the gaseous waste is Class B or C. Only sorbents approved by the department shall be used (see Appendix F).

37. Class A ion exchange and filter media containing radionuclides with half-lives greater than five years, the total package concentration of which is one microcurie (3.7×10^4 Bqs) per cubic centimeter or greater, except Cobalt 60 having a concentration of 50 microcuries per cubic centimeter or greater, shall:

A. Meet the stability requirements of Condition 26 and shall contain no detectable free-standing liquid. "No detectable free-standing liquid" is defined to mean as little liquid as reasonably achievable, but in no case shall the liquid exceed 1.0% of the volume of the waste when the waste is in a disposal container designed to ensure stability, or 0.5% of the volume of waste processed to a stable form. Other Class A ion exchange and filter media which are classified as unstable shall contain no more liquid than 0.5% by volume of the waste.

B. The calculations of concentrations of isotope activity will adhere to the "sum of fractions being equal to or less than unity rule" for ion exchange resins and filter media containing isotopes with half-lives greater than five years, with the exception of Cobalt 60.

38. Radioactive waste containing radium and/or transuranic radionuclides, as described in Appendix A, is acceptable, provided that the radium and transuranic radionuclides are essentially evenly distributed within an homogenous waste form. The receipt and disposal of waste in which the radium or transuranic radionuclides are not evenly distributed (components, or equipment primarily contaminated with radium or transuranic radionuclides), or radium or transuranic radionuclides in excess of Class A limits, requires the specific approval of the department. Radioactive waste packaged in accordance with License Condition 39 is exempt from this condition.

39. Radioactive consumer products, the use and disposal of which is exempt from licensing control (see WAC 246-232), may be received for disposal without regard to concentration limits of Appendix A, provided the entire unit is received and is packaged with sufficient sorbent material so as to preclude breakage and rupture of its contents. Only sorbents approved by the department shall be used (see Appendix F).

This condition allows the disposal of such consumer products as intact household or industrial smoke detector units containing Americium-241 foils, and radium or other radioactive materials incorporated into self-luminous devices and electron tubes. Documentation that the consumer product was manufactured under a U.S. Nuclear Regulatory Commission exempt license shall accompany each shipment made under this condition. Waste packaged in accordance with this license condition shall be Class A unstable, and the words "Condition 39" shall be noted on the manifest or other documentation accompanying the waste package.

40. Incinerator ash which is classified as Class A waste according to Condition 26 shall be solidified, granular, or treated in such a manner as to be rendered nondispersible in air, exclusive of packaging.

41. Wastes containing a concentration of oil in excess of ten percent by weight are not authorized for burial. Dilution by solidification or stabilization media shall not be allowed in determining the waste composition. "Oil" means an organic liquid which is immiscible in water, the disposal of which is not regulated under RCRA or the state hazardous waste regulations.

42. Until alternative waste management techniques such as incineration or recycling become generally available, waste liquids which have a pretreatment concentration of chelating agents in excess of 0.1 percent by weight shall be treated by either solidification or stabilization, and placed into an Engineering Concrete Barrier (ECB). Prior to receipt of any chelate waste in excess of 1.0 percent by weight, the generator must notify the licensee of the intent to ship such material for disposal. The notification shall consist of telephone and written notification to the Facility Manager prior to shipment. Dilution by solidification or stabilization media shall not be allowed in determining waste composition. "Chelating agent" means amine polycarboxylic acids (e.g., EDTA, DTPA), hydroxy-carboxylic acids and polycarboxylic acids (e.g., citric acid, carbolic acid, and gluconic acid), the disposal of which is not regulated under RCRA or the state hazardous waste laws. Additionally, the licensee shall record the three-dimensional location of the ECBs containing these wastes

43. The licensee shall not accept for disposal any neutron source (e.g., polonium 210, americium 241, radium 226 in combination with beryllium or other target) unless the generator has notified the licensee of the intent to ship such source to the licensees disposal facility. The notification shall consist of telephone and written notification to the Facility Manager prior to shipment. The notification shall indicate the isotope, activity, form of the source, a description of the packaging utilized, radiological data, and anticipated date of arrival. Additionally, a copy of the written notification must accompany the shipment made under this license condition.

RECEIPT, ACCEPTANCE, AND INSPECTION CONDITIONS

44. The licensee is exempt from the timely inspection requirements of WAC 246-221-160(2)(a) and (3)(a), provided the requirements of the Facility Standards Manual and Conditions 45 through 48 of this license are met.

45. Waste shipments shall not be accepted at the facility unless accompanied by the following (a single shipment shall consist of not more than one vehicle or one tractor with legal trailer(s) attached):

    A. Shipment manifest approved by the department.

B. Washington State Patrol or Washington State Utilities and Transportation Commission vehicle inspection certificate, or a current visible Washington State 90-day vehicle inspection seal.

C. Current certification Form RHF-31, properly executed by a representative of the shipper/generator of the waste, in accordance with requirements of Washington State Rules and Regulations for Radiation Protection, WAC 246-249-030.

D. Copies of any specific approval or variance granted by the department for disposal.

E. Upon departmental request, other permits or documentation required under this license, or state or federal law or regulation.

46. Waste shipments shall not be accepted by the facility unless the accompanying Form RHF-31 is stamped as received, and initialed by an authorized representative of the department. (This individual may be the licensee, when designated by telephone notification and confirming letter from the department.)

47. Upon acceptance for disposal of each waste shipment, the licensee shall:

A. Acknowledge receipt of the waste as soon as practicable, but no later than seven days following its acceptance for disposal, by returning a signed copy or equivalent documentation of the shipment manifest to the shipper. The shipper to be notified by the licensee is the one last possessing the waste and transferring it to the licensee.

B. Indicate on the returned copy of the shipment manifest, shipping papers, or equivalent documentation any discrepancy between noted waste descriptions listed on the manifest or papers and the waste materials received in the shipment.

C. Notify the shipper and the department when any shipment or part of a shipment has not arrived 60 days after the separate copy of the shipment manifest or shipping papers was received by the licensee.

D. Maintain copies of completed shipment manifests, including annotations of discrepancies found in accordance with Condition 47.B.

E. Maintain records in accordance with in WAC 246-250-600.

48. Any shipment in which there is evidence that any radioactive material is missing, or that the waste packages have been tampered with or damaged in transit, shall be received by the licensee and safely stored pending notification to the department. The licensee shall not dispose of such packages unless authorized by the department.

49. The manifest for each package of waste received for disposal shall list all radionuclides greater than 3,700 kBq (100 microcuries).

BURIAL OPERATIONS CONDITIONS

50. Packages containing radioactive material shall not be stored above ground for a period greater than ninety days from the date of the department's release of the packages. Packages shall be stored in such a manner as to maintain radiation exposures as low as reasonably achievable. Retention of packaged waste above ground for not more than three working days does not constitute storage.

51. Unless otherwise specifically authorized by the department, the licensee is not authorized to open any package containing radioactive material at the facility, except for the following:

    A. For purposes of repairing, repackaging, or overpacking leaking containers or containers damaged in transport in the event the material is to be disposed, or returned to the generator if required for the protection of the health and safety of the employees or the environment.

    B. For purposes of inspection and waste confirmation in the presence of a department inspector for compliance with Title 246 WAC, other applicable federal and state regulations, and conditions of this license.

    C. For purposes of returning outer shipping containers.

    The licensee shall use and maintain a facility, in accordance with the Facility Standards Manual, where the above operations can be safely conducted.

52. By June 1, 2006 the licensee shall dispose of all Class B, and C waste in a secondary containment system which has been reviewed and approved by the department. In addition, waste packages containing any of the following radionuclides, H-3, I-129, C-14, Tc-99, U-238, U-234, and Pu-239, shall be disposed in accordance with procedures approved by the department. Secondary containment shall be used for all packages that exceed the predetermined levels contained in these procedures, and the Facility

Standards Manual. Levels shall be established such that at least 90% of the allowable future source term activity for each listed isotope is placed in secondary containment. The effectiveness of these procedures shall be evaluated annually and reported in the Facility Utilization Report required by License Condition 71:

53. Class B and C waste packages stabilized with bitumen shall be backfilled immediately after waste placement. Sufficient backfill material shall be placed around each container to cover all sides around the packages.

54. Accumulations of waste packages, with an SNM Mass ratio (SNM Mass/ Package Mass) that exceeds 0.0002 (1/5000), in quantities specified in this license, shall be disposed so that there is a minimum of eight inches of soil or a minimum of four feet of non-SNM-bearing waste in all directions from any other accumulation of packages containing SNM in quantities specified in this license, with an SNM Mass ratio that exceeds 0.0002.

55. Class B, and C waste packages must be disposed at a minimum depth of five meters (16.5 feet) below the natural grade of the trench, as defined in the Comprehensive Facility Utilization Plan.

56. All discrete radium 226 must be disposed in an engineered concrete barrier (ECB) at a minimum depth of 23 feet below the natural grade of the trench, as defined in the Comprehensive Facility Utilization Plan.

SITE DESIGN AND CONSTRUCTION CONDITIONS

57. All burial trenches or disposal units shall be in a controlled area surrounded by a chain link fence, eight feet high, and topped with barbed wire.

58. Thirty days prior to commencement of construction of any new disposal unit, the licensee shall submit to the department a detailed engineering plan for the trench in accordance with the provisions of the Facility Standards Manual, or a statement that the proposed trench will be designed and constructed in accordance with Condition 60 of this license.

59. By June 30, 2006, the licensee shall submit, for approval by the department an updated Comprehensive Facility Utilization and Engineering Plan which encompasses the proposed site conditions for the expected lifetime of the facility. The Plan shall discuss, at a minimum, the reasoning for the choice of design, and shall include detailed drawings and calculations sufficient to support the conclusions reached. Changes to the Plan must be submitted to the department for review and approval. The plan shall be updated and submitted for approval by the department every five years.

License Number: WN-I019-2

Amendment 36

60. Until an the updated Comprehensive Facility Utilization and Engineering Plan required by Condition 59 is approved by the department, the licensee shall construct new disposal units in accordance with the March 6, 1991 department-approved Comprehensive Facility Utilization Plan, Document 200-DOC-001, Rev. 3.

61. A. Upon completion of the construction of any new trench, submit to the department two copies of the trench construction report. The report shall include, at a minimum, as-built drawings, daily and final inspection reports, laboratory and field soil test results, and a description of any problems encountered during construction, in order to demonstrate that the construction of the disposal unit is in compliance with applicable plans and specifications contained in the approved Facility Utilization Plan.

    B. 30 days prior to use of any new trench, notify the department in writing of the intent to physically place waste in the trench.

62. The dimensions of burial trenches shall not exceed a width of 150 feet (46 meters), a depth of 50 feet (15.24 meters), or a length of 1000 feet (305 meters) without specific documented approval from the department. Measurements shall be referenced to natural grade as established in the March 6, 1991 department-approved Comprehensive Facility Utilization Plan.

63. Until an agreement is secured with agencies controlling adjacent lands, which meets the requirements of Condition 74 (K) of this license, disposal units constructed after the effective date of this license shall be placed at least 100 feet away from the North, South, and West subleasehold boundaries. The set-back distance for the East boundary shall be no less than 50 feet.

ENVIRONMENTAL MONITORING AND SURVEY CONDITIONS

64. The licensee shall perform an exposure pathway analysis of the site closure plan within 180 days of a department-approved closure plan. The licensee shall verify that the proposed closure actions remain within the acceptable parameters developed and established by the Environmental Impact Statement's (EIS) "Comprehensive Exposure Pathway Analysis". The verification shall include air, soil, ground water, vegetation, fauna, burrowing animals, and human impacts. Additionally, the analyses shall be reviewed and updated as necessary every four years subsequent to the approval of the pathway analyses. Upon completion of the review, the licensee shall submit a copy of the review to the department. This requirement is in addition to the requirements found in WAC 246-250-060(1). Within 120 days of completion of the pathway analysis report, the licensee

shall submit to the department the licensee's evaluation and analysis of the report with respect to the environmental monitoring programs. The analyses shall clearly identify and differentiate between the roles performed by the natural disposal site characteristics and design features in isolating and segregating the wastes. The analyses shall clearly demonstrate that there is reasonable assurance that the exposure to humans from the release of radioactivity will not exceed the limits set forth in WAC 246-250-170.

65. The licensee shall conduct an environmental monitoring program capable of detecting the potential contribution of radioactive material from the site to the environment. The program shall include collection of samples and analyses at frequencies specified in the Facility Standards Manual (FSM). The licensee shall coordinate sampling schedules with the department to provide, when possible, duplicate samples on a prearranged frequency. A comprehensive annual report of all sample analyses, with statistical trend analyses and discussions of all anomalous results and actions taken, specification of the quantity of each of the principal contaminants released to unrestricted areas in liquid and in airborne effluents during the preceding year, wind rose for the facility, depth to water, and depth to bottom, Ph, as well as non-radiological contaminants specified in the FSM, for all groundwater wells, ventilation exhaust samples taken from the inspection facility, and comparisons of onsite groundwater wells and U.S. DOE groundwater wells in the vicinity of the facility shall be forwarded to the department by June 1 of each year. The report shall be submitted in general accordance with the department's document entitled "Recommended Content and Format for Annual Environmental Reports." Deviations in the reporting format must be approved by the department. In addition, the licensee shall report immediately any environmental monitoring results in excess of reporting levels specified in the Facility Standards Manual.

66. The licensee shall conduct an experimental monitoring program designed to determine the extent and modes of migration of disposed waste into the unsaturated zone, in accordance with procedures specifically approved by the department. Annual reports shall be made to the department by June 1 of each year. The results of the program shall be discussed in the annual Environmental Monitoring Report required by license Condition 65.

TRENCH AND SITE CLOSURE CONDITIONS

67. The licensee shall, within 90 days of filling each disposal unit, closed after the effective date of this license, erect interim disposal unit monuments upon which the following information shall be displayed in a legible manner:

A. Total activity of radioactive material, in curies, excluding source and special nuclear materials, total amount of source materials in kilograms, and total amount of special nuclear material in grams.

B. Trench number or disposal unit designation.

C. Date of opening and closing of the disposal unit.

D. Volume of waste contained in the disposal unit.

E. Coordinates of the disposal unit.

The erection of interim monuments may be omitted if permanent monuments, required by Condition 73, are scheduled to be erected within six months of completion of the disposal unit.

68. The licensee shall initiate closure and stabilization measures as each trench is filled and covered in accordance with the schedule and performance criteria defined in the Final Environmental Impact Statement for the Commercial Low-Level Radioactive Waste Disposal Site, Richland Washington, dated May 28, 2004.

69. The licensee shall conduct closure and stabilization operations in accordance with the most recent department-approved Comprehensive Facility Utilization Plan and the Facility Closure and Stabilization Plan required by Condition 74 as each trench is filled and covered.

70. In addition to the requirements of Condition 69, the licensee shall design and construct interim disposal unit caps in accordance with the specifications contained in the Facility Standards Manual. Interim disposal unit caps shall be established within 3 months of completion of a disposal unit, or as described in the Comprehensive Facility Utilization Plan approved by the department.

71. The licensee shall submit a facility utilization report to the department by June 30 of each year. The report shall provide:

A. Identification of each disposal unit and description of all waste emplaced during the previous calendar year. A three-dimensional identification to describe the disposal location of each Class B, and C package of waste including the location of engineered barriers used to provide structural stability, and the disposal location of those wastes containing oils or chelates shall also be provided. The location of Class A waste shall be tracked three-dimensionally within 50 feet horizontally and within 10 feet in the vertical plane.

B. Percent of utilization for each operating stable and unstable trench or disposal unit filled during the previous calendar year.

C. Annual aerial photograph of the leasehold.

D. Summary, by waste class, of activities and quantities of radionuclides disposed.

E. A summary of disposal unit maintenance activities.

F. Any instances in which observed site characteristics were significantly different from those described in the application for the license.

G. The remaining capacity of the disposal facility and each open disposal unit.

H. A summary of each disposed radionuclide and its activity.

I. An updated source term for the facility that covers all waste disposed during the previous year.

J. A summary of waste packages that have been placed in secondary containment.

K. The volume of diffuse Naturally Occurring and Accelerator produced Radioactive Material (NARM) disposed.

L. An evaluation of waste disposed in secondary containment during the previous year.

M. Any other information the department may require.

72. As radioactive material buried may not be transferred by abandonment or otherwise, unless specifically authorized by the department, the expiration date of this license applies only to the above-ground activities and to the authority to bury radioactive material wastes at the location specified in Condition 11. The license continues in effect, and the responsibility and authority for possession of buried radioactive material wastes continues until the department finds that the plan established for preparation of the facility for transfer to another person or custodial agency has been satisfactorily implemented in a manner to reasonably assure protection of the public health and safety and the environment, and the department takes action to terminate the licensee's responsibility and authority under this license. All requirements for environmental monitoring, site inspection, maintenance, and site security continue whether wastes are being buried or not.

73. All trenches or disposal units shall be conspicuously marked with permanent, stable monuments at each end, consistent with the approved site closure plan required by Condition 74. Permanent monuments shall be designed to stand erect, well above the grade of the final trench cover, and in a manner which will not allow them to be covered or obscured by drifting sand during the institutional control period. Inscriptions shall be made so as to endure and remain legible well beyond the institutional control period. The permanent monuments shall be inscribed with the following information:

    A. Total activity of radioactive material, in curies, excluding source and special nuclear materials, total amount of source material in kilograms, and total amount of special nuclear material, in grams, in the trench.

    B. Trench number or other means of identifying the disposal unit.

    C. Date of opening and closing the disposal unit.

    D. Volume of waste in the disposal unit.

    E. Coordinates of the stable and unstable disposal units, including disposal unit depth and depth of cover at closure.

    This same information shall be reported to the Department of Health and the Department of Ecology within 30 days of closure of each trench or disposal unit.

74. Upon approval of the Trench Cap Design required by License Condition 68, the licensee shall review and update the July 1996 Facility Closure and Stabilization Plan within one year, and shall review and update the plan as necessary every four years thereafter. A copy of this review shall be submitted to the department upon completion of the review. The facility closure and stabilization plan shall address how the licensee meets or plans to meet the following requirements:

    A. Bury all waste in accordance with the requirements of the license.

    B. Dismantle, decontaminate (as required), and dispose of all structures, equipment, and materials that are not to be transferred to the site custodian.

    C. Document the arrangements and the status of the arrangements for orderly transfer of site control and for long-term care by the government custodian. Also document the agreement, if any, of state or federal governments to participate in, or accomplish, performance objectives. Specific arrangements to assure availability of funds to complete the site closure and stabilization plan shall be documented.

D. Direct gamma radiation levels from buried wastes shall be essentially background at any accessible above-ground location, as determined by evaluation of environmental data from the licensee, the U.S. Department of Energy, and its contractors.

E. Demonstrate by measurement and model during operations and after site closure that concentrations of radioactive material which may be released to the general environment in ground water, surface water, air, soil, plants, or animals will not result in any member of the public receiving an annual dose exceeding an equivalent to 25 millirems (0.25 mSv) to the whole body, 75 millirems (0.75 mSv) to the thyroid, and 25 millirems (0.25 mSv) to any other organ.

F. Render the site suitable for surface activities without resort to custodial care exceeding vegetation control, minor maintenance, and environmental monitoring. No active ongoing maintenance shall be necessary. Final conditions at the site must be acceptable to the government custodian and compatible with its plan for the site.

G. Demonstrate that all trench elevations are above water table levels, taking into account the complete history of seasonable fluctuations.

H. Eliminate the potential for erosion or loss of site or trench integrity due to factors such as ground water, surface water, wind, subsidence, and frost action. All slopes shall be sufficiently gentle to prevent slumping or gullying. The surface shall be stabilized to minimize erosion, settling, or slumping of caps.

I. Demonstrate that permanent trench markers are in place, stable, and keyed to benchmarks. Identifying information shall be clearly and permanently marked as required by Condition 67 of this license.

J. Compile and transfer to the department complete records of site maintenance and stabilization activities, trench elevation and locations, trench inventories, and monitoring data for use during custodial care for unexpected corrective measures and data interpretation.

K. Maintain a buffer zone to provide space to stabilize slopes, incorporate offsite surface water management features, assure that any future excavation on adjoining areas shall be evaluated for the potential to compromise trench or site integrity, and provide working space for unexpected mitigating measures, if needed, in the future. The buffer zone may be within the subleasehold or on adjacent land, provided written agreements are secured with persons owning or controlling adjacent lands, which shall allow the licensee or custodial agency the required access and actions.

L. Provide a secure passive site security system (e.g., a fence) that requires minimum maintenance.

M. Stabilize the site in a manner to minimize environmental monitoring requirements for the long-term custodial phase, and develop a monitoring program based on the stabilization plan.

N. Investigate the causes of any statistically significant levels of radioactive or hazardous materials in environmental samples taken during operation and stabilization. In particular, any evidence of unusual or unexpected rates or levels of radionuclide migration in or with the ground water shall be analyzed, and corrective measures implemented.

O. Eliminate the need for active water management measures, such as a sump or trench pumping and treatment of water to assure that wastes are not leached by standing water in the trenches.

P. Evaluate present and proposed activities on adjoining areas to determine their impact on the long-term performances of the site, and take reasonable action to identify and minimize the effects.

75. Upon completion of Phase II of Trench Cap construction, the licensee shall develop specific procedures, and implement a program, approved by the department, which is designed to study (A) erosion of soils onto and off of the facility, (B) methods of revegetation of closed trenches, and (C) subsidence of trenches, in accordance with criteria established by the department. Once approved, the licensee shall submit annual reports to the department by October 31 which discusses the results of the program.

76. Upon closure of each disposal unit, the licensee shall submit to the department a summary of:

A. All radionuclides and associated activities disposed in that trench.

B. Waste class totals by volume and activities.

C. Disposal locations and volume of chelates disposed.

D. A summary, to the extent practical, of the physical and chemical forms disposed.

77. Notwithstanding other requirements of this license or the sublease, one year prior to the anticipated transfer of the licensee's facility and buried radioactive waste to another person (including an agency of the state or federal government), the licensee shall submit a final version of the facility closure plan, including a schedule for implementation of all remaining plan elements prior to transfer, and a description of the mechanics of orderly transfer in coordination with the transferee.

FINANCIAL ASSURANCES

78. By June 30 of each year, the licensee shall submit the following financial documentation to the department:

    A. A copy of its financial report or a certified financial statement and Security and Exchange Commission (SEC) Form 10K.

    B. A copy of its financial or surety arrangements for closure and stabilization of the disposal facility.

    C. A copy of personnel and nuclear liability insurance held for the facility.

79. The licensee shall submit to the department a copy of site surveillance fees paid, within 45 days after the end of each calendar quarter.

80. The licensee shall conduct a quality assurance/quality control program in accordance with US Ecology Quality Assurance Manual, and Quality Assurance Procedures Manual QA-MA-2. Changes to these documents shall be submitted to the department within 30 days of the change.

81. The licensee shall comply with the requirements set forth in Order dated November 29, 2005, signed by Gary Robertson, Director, Office of Radiation Protection, and made a part hereof by this reference. The licensee shall comply with any new requirements issued subsequent to date of original Order.

82. <u>Effective 4 April 2008:</u>
The licensee shall comply with the requirements described in the Administrative Amendment to this license and the document (NRC ORDER EA-07-305, with attachments, dated 5 December 2007) entitled "Fingerprinting and Criminal History Records Check Requirements for Unescorted Access to Certain Radioactive Material". Those requirements listed in the U.S. Nuclear Regulatory Commission Order (implemented in accordance with the due dates given in the "Timeline Attachment" to the 5 March 2008 Administrative Amendment cover letter), shall be instituted as required as part of the licensee's Trustworthiness and Reliability component of the Increased Controls requirements.

License Number: WN-I019-2

Amendment 36

By 3 July 2008, the licensee shall provide under oath or affirmation, to the state of Washington Department of Health and to the Nuclear Regulatory Commission, a certification that the Trustworthiness and Reliability Official is deemed trustworthy and reliable by the licensee as required in paragraph B.2 of the U.S. Nuclear Regulatory Commission (NRC) Order EA-07-305, published in the Federal Register on December 13, 2007 [72 FR 70901].

All fingerprints obtained by the licensee pursuant to this requirement must be submitted to the NRC for transmission to the U.S. Federal Bureau of Investigation (FBI). Additionally, the licensee's submission of fingerprints shall also be accompanied by a certification, under oath and affirmation, of the trustworthiness and reliability of the licensee's Trustworthiness and Reliability Official as required by paragraph B.2 of NRC Order EA-07-305.

The licensee shall complete implementation of the fingerprinting requirements by 1 October 2008. The licensee shall notify the state of Washington Department of Health and the U.S. Nuclear Regulatory Commission when they have achieved full compliance with the requirements described in the NRC Order. The notification shall be made within twenty-five (25) days after full compliance has been achieved.

The licensee shall notify the state of Washington Department of Health and the U.S. Nuclear Regulatory Commission within 24 hours if the results from a criminal history records check indicate that an individual is identified on the FBI's Terrorist Screening Data Base.

83. Except as specifically provided by this license, the licensee shall possess and use radioactive material described in Conditions 6, 7, and 8 of this license in accordance with statements, representations, and procedures contained in the documents listed below. The department's "Rules and Regulations for Radiation Protection," Title 246 WAC, shall govern the licensee's statements in applications or letters, unless statements are more restrictive than the regulations. Any change to the documents listed below shall require departmental approval in the form of an amendment to this license.

A. Application and cover letter dated January 7, 1997.

B. Facility Standards Manual, dated February 2003; Superseded by License Condition 83.D.

C. Administrative amendment incorporating increased controls, dated November 30, 2005.

License Number: WN-I019-2

Amendment 36

D. US Ecology Washington, Inc. Facility Standards Manual dated September 2006; Superseded by License Condition 83.F.

E. Letter and attachments dated March 29, 2007 RE: request to revise disposal limits for SNM and addition of requirement to dispose of Radium 226 sources in ECBs.

F. Letter and attachments dated December 20, 2007 RE: request to: eliminate experimental monitoring of vadose tritium and radon , solar still tritium, and radon in air; suspend vadose vapor sampling and groundwater sampling of hazardous constituent until after completion of the MTCA investigation; change gamma composite of air filters from monthly to quarterly; change tritium in air sampling from continuous to continuous for 30 days each quarter; change soil sampling from quarterly to once every 3 quarters; change vegetation sampling from quarterly to annually; change groundwater sampling from quarterly to once every 3 quarters; change all environmental TLDs to quarterly; change personal dosimetry exchange form quarterly to semi-annually; reduce vendor audits from every three years to every five years.

G. US Ecology Washington, Inc. Facility Standards Manual dated December 2007.

H. Administrative amendment; RE: adding new IC requirements for fingerprinting and criminal history checks.

FOR THE STATE OF WASHINGTON DEPARTMENT OF HEALTH

Date: March 5, 2008

By _____
Mikel J. Elsen, Supervisor
Waste Management Section

APPENDIX A

WASTE CLASSIFICATION TABLE

License Number: WN-I019-2

Amendment 36

RADIONUCLIDES	CONCENTRATION LIMITS IN CURIES/CUBIC METER**	
Table 1 (long-lived)	Class A	Class C
C-14	≤0.8	≤8
C-14 in activated metal	≤8	≤80
Ni-59 in activated metal	≤22	≤220
Nb-94 in activated metal	≤0.02	≤0.2
Tc-99	≤0.3	≤3
I-129	≤0.008	≤0.08

CONCENTRATION LIMITS IN NANOCURIES/GRAM		
Alpha emitting Transuranic radionuclides with half-lives greater than five years	≤10	≤100 with specific departmental approval
Radium 226	≤10	≤100 with specific departmental approval
Curium 242	≤2,000	≤20,000 with specific departmental approval
Plutonium 241	≤350	≤3,500

APPENDIX A

WASTE CLASSIFICATION TABLE

License Number: WN-I019-2

Amendment 36

RADIONUCLIDES	CONCENTRATION LIMITS IN CURIES/CUBIC METER**		
Table 2 (short-lived)	Class A	Class B	Class C
Total of all with half-life less than 5 years	≤700	♦	
H-3	≤40	♦ with specific departmental approval	
Co-60	≤700	♦	
Ni-63	≤3.5	≤70	≤700
Ni-63 in activated metal	≤35	≤700	≤7000
Sr-90	≤0.04	≤150	≤7000
Cs-137	≤1	≤44	≤4600

** Curies/cubic meter is equivalent to microcuries/cubic centimeter

♦ There are no limits established for these radionuclides in Class B or C wastes. Practical considerations such as the effects of external radiation and internal heat generation on transportation, handling, and disposal will limit the concentrations for these wastes. These wastes shall be Class B unless the concentrations of other nuclides in Table 2 determine the Waste to be Class C independent of these nuclides.

Note 1. Unless specifically restricted elsewhere in the license, the concentration of a radionuclide or radionuclide mixture may be averaged over the volume (or mass) of the waste and, if used, the solidification agent or matrix. The concentration of radionuclides in filters encapsulated with a solidification agent or matrix shall be averaged over the volume of the filter, not the solidification agent. The volume (mass) of packaging containers, liners or overpacks shall not be included in this calculation, nor shall the volume (mass) of the waste mixture be artificially increased by the addition of heavy, nondispersible solids or objects even if considered as waste. Further guidance is provided in "Low-Level Waste Licensing Branch Technical Position on Radioactive Waste Classification," May 1983, or successor documents issued by the U.S. Nuclear Regulatory Commission.

Note 2. The waste is Class A if none of the listed radionuclides is present. Waste packaged in accordance with Condition 39 of this license shall be Class A unstable and the words "Condition 39" shall be noted on the manifest or other documentation accompanying the waste package.

Note 3. There are no Class B values for Table 1 radionuclides; their presence classifies the waste as either Class A or Class C according to their concentrations.

Note 4. The waste class for mixtures of the listed radionuclides is determined by deriving for each radionuclide the ratio between its concentration in the mixture and its concentration limit in the table of this license and adding the resulting ratio values for each radionuclide group. All limits used in the calculations must be for the same waste class. The sum of the ratios for each radionuclide group must be equal to or less than 1.0, or the waste is the next higher classification than that used for the calculation.

If Class C limits are used in the calculation and the sum of ratios for either group exceeds 1.0, the waste is not acceptable for near-surface disposal without prior written approval from the department.

Note 5. If radioactive waste contains a mixture of radionuclides, some of which are listed on Table 1, and some of which are listed on Table 2, classification shall be determined as follows:

A. If the concentration of a nuclide listed in Table 1 does not exceed the Class A limit, the class shall be that determined by the concentration of nuclides listed in Table 2.

B. If the concentration of a nuclide listed in Table 1 exceeds the Class A limit, but does not exceed the Class C limit, the waste shall be Class C, provided the concentration of nuclides listed in Table 2 does not exceed the Class C value.

Note 6. If concentrations for any single radionuclide exceed the Class C values in the table, the waste is not acceptable for near-surface disposal under this license.

APPENDIX B

APPROVED SOLIDIFICATION MEDIA

License Number: WN-I019-2

Amendment 36

Only approved solidification media can be used. Approved solidification media are:

1. Atcor Cement
2. Aquaset I and II
3. Aztech (General Electric)
4. Bitumen* (Waste Chem and ATI)
5. Chem-Nuclear Cement
6. Concrete (Structural)
7. Delaware Custom Media
8. Dow Media
9. Envirostone
10. LN Technologies Portland Cement Formula for Oils
11. Pacific Nuclear Portland Cement
12. Petroset I and II
13. Safe T Set
14. SEG (Westinghouse - Hittman) Cement
15. Petroset -H
16. Aquaset -H
17. EMC Cement
18. Other solidification media and processes which have been approved by U.S. NRC and/or the department.

*Note: For waste types that require solidification, both oxidized bitumen and straight distilled are acceptable.

"Solidification" means a resultant waste form which is a free-standing solid and primarily relies upon a chemical reaction or encapsulation to contain the liquid. Approved stabilization media may also be used as solidification agents without conducting tests necessary to verify stability, provided the resulting waste form is a free-standing solid.

It is the responsibility of the person processing the waste into a solid form to adhere to a quality control program to verify the waste form is appropriate. If a material can also be used as a sorbent, the restrictions noted for its use in Appendix F shall apply to its use as a solidification agent.

APPENDIX C

APPROVED STABILIZATION MEDIA

License Number: WN-I019-2

Amendment 36

Only approved stabilization media may be used. Approved stabilization media are:

1. Aztech (General Electric)
2. Bitumen* (Waste Chem)
3. Concrete**
4. Dow Media (Vinyl Ester Styrene)
5. Veri Solidification Process
6. Other stabilization media and processes which have been reviewed and approved by U.S. NRC and the department as meeting waste form stability criteria.

*Note: Oxidized Bitumen only.

**Concrete, when used as an encapsulation medium around a small volume of radioactive material; e.g., a sealed source centered in a 55-gallon drum containing concrete, shall have a formulated compressive strength greater than or equal to 2500 psi.

APPENDIX D

CERTIFICATES OF COMPLIANCE FOR HIGH INTEGRITY CONTAINERS

License Number: WN-I019-2

Amendment 36

Only those High Integrity Containers which have been approved by the department and used in accordance with the Certificate of Compliance (C of C) may be used. Approved High Integrity Containers are:

C of C Number	Manufacturer	Package Identification Number
WN-HIC-01	Pacific Nuclear	DSHS-HIC-TMI-01
WN-HIC-02	Nuclear Packaging	DSHS-HIC-EA-50
WN-HIC-03	Chichibu Cement	DSHS-HIC-SFPIC 200L
WN-HIC-04	Chichibu Cement	DSHS-HIC-SFPIC 400L
WN-HIC-05	Nuclear Packaging	DSHS-HIC-EA 142-A
WN-HIC-06	Nuclear Packaging	DSHS-HIC-EA 50-A
WN-HIC-07	Nuclear Packaging	DSHS-HIC-EA 140-A
WN-HIC-08	Nuclear Packaging	DSHS-HIC-EA 190-A
WN-HIC-09	Nuclear Packaging	DSHS-HIC-EA 210-A
WN-HIC-10	Nuclear Packaging	DSHS-HIC-EA 50-C
WN-HIC-11	Nuclear Packaging	DSHS-HIC-EA 140-C
WN-HIC-12	Nuclear Packaging	DSHS-HIC-EA 142-C
WN-HIC-13	Nuclear Packaging	DSS-HIC-EA 190-C

APPENDIX D

CERTIFICATES OF COMPLIANCE FOR HIGH INTEGRITY CONTAINERS

License Number: WN-I019-2

Amendment 36

C of C Number	Manufacturer	Package Identification Number
WN-HIC-14	Nuclear Packaging	DSHS-HIC-EA 210-C
WN-HIC-15	(SEG) LN Technologies	DSHS-HIC-LN 179-H
WN-HIC-16	(SEG) LN Technologies	DSHS-HIC-LN 131-H
WN-HIC-17	(SEG) LN Technologies	DSHS-HIC-LN 118-H
WN-HIC-18	(SEG) LN Technologies	DSHS-HIC-LN 96-H

Other High-Integrity Containers which have been specifically approved by the department.

APPENDIX E

CERTIFICATES OF COMPLIANCE FOR ENGINEERED BARRIERS

License Number: WN-I019-2

Amendment 36

Only those Engineered Barriers approved by the department and/or NRC and used in accordance with the Certificate of Compliance (C of C) may be used. Approved Engineered Barriers are:

C of C Number	Issued To
WN-EB-01	US Ecology Washington, Inc.
WN-EB-02	US Ecology Washington, Inc.

Other Engineered Barriers which have been specifically approved by the department.

APPENDIX F

APPROVED SORBENTS

License Number: WN-I019-2

Amendment 36

Only those absorbents listed below have been approved by the state of Washington, Department of Health, Division of Radiation Protection, (department) for use in packaging and/or processing of incidental or unintentional radioactive liquids in accordance with License Condition 33.

Absorbency efficiencies and quantity of absorbent required vary. In all cases, it is the responsibility of the waste generator and/or packager to determine the efficiency and proper proportions of absorbent for incidental or unintentional liquids being absorbed. Note: Enough absorbent materials must be provided to absorb at least twice the volume of radioactive liquid contents.

Media

A. Clay Materials

1. Speedi Dri
2. Hi Dri
3. Florco
4. Florco X
5. Instant Dri
6. Safe T Sorb
7. Opalex
8. Moltan Plus

B. Diatomaceous Earths

1. Superfine
2. Floor Dry
3. Celetom
4. Safe N Dri
5. Solid-A-Sorb
6. Xtrasorb- 248

C. Perlite *

1. Chemsil 30
2. Chemsil 50
3. Chemsil 3030
4. Dicaperl HP2OO
5. Dicaperl HP5OO

D. Others

1. Dicalite Dicasorb
2. Petroset
3. Petroset II
4. Aquaset
5. Aquaset II
6. Safe T Set
7. SP-100
8. SP-400
9. Large Grain Superabsorbent crystals

* Note: Perlite products shall not be used for packaging animal carcasses.

Attachment 4
E-mail from Perma-Fix Regarding their Capacity and Capability to Process the Midnite Mine Sludge at their Facility

Davis, Melanie

From: John H. Hagan [jhagan@perma-fix.com]
Sent: Thursday, April 09, 2009 4:19 PM
To: Davis, Melanie
Cc: 'Richard Grondin'; 'Cannon, Curt'; 'Turner, Zane'
Subject: FW: Rev. 1 Perma-Fix Response - Midnite Mine sludge processing

Melanie,

We have revised the below response to reflect a minimum of 30 days required before we can proceed with waste receipts at our PFNW facility. As discussed, this minimum 30 day time frame begins upon contract execution and is subject to change (increasing) based upon the review and approval process as dictated by the regulating authority (WDOH).

If you have any questions, please feel free to contact me at (949) 939-7404.

Thank you,
John H. Hagan

From: Davis, Melanie [mailto:Melanie.Davis@tetratech.com]
Sent: Tuesday, April 07, 2009 4:49 PM
To: jhagan@perma-fix.com
Subject: Midnite Mine sludge processing

John,
I left you a voice mail as well. I am working with Lou Miller on the Midnite Mine sludge report for the EPA. I'll need to get some additional information from Perma-Fix to include in our report. We will need the information in the format of an email or letter which we would attach to the report. Some of the information needed is listed below.

1. The capacity and capability of the Perma-Fix facility to prepare the Midnite Mine sludge for disposal at U.S. Ecology

   Perma-Fix Response: We currently possess the capacity to receive and treat approximately 1.7 million net pounds of LLW sludge that is generated at your facility on an annual basis (please reference waste profile 2009-WPAFB-0001, Rev. 0). Our PFNW facility will require a minimum of thirty (30) business days after contract execution, before we can begin to receive waste shipments from Midnite Mines (due to license variance process as noted below). All waste shipments shall be pre-approved/authorized prior to shipment to our facility (per Waste Acceptance Criteria and profile approval letter dated February 26, 2009). We look forward to working with Midnight Mine on assembling a mutually beneficial shipment and receipt schedule that addresses both your waste shipment expectations as well as our facility waste receipt requirements at your convenience. Additionally, upon contract execution, we will assemble an anticipated treatment and disposal schedule for processed materials that may enable Midnite Mine and PFNW in preparation for disposal activities at the US Ecology disposal facility in Richland Washington. We understand that Midnite Mine will be responsible for all disposal costs related to this

sludge processing effort.

Note: Perma-Fix will need to increase condition 8.C. (Source Material) and possibly condition 8.D. (Any other radioactive material, Atomic Numbers 84-103, except Special Nuclear Material and Source Material) of our Radioactive Materials License prior to receiving this material at PFNW. We have already discussed this license variance request with WDOH and are confident that we can get a variance once a contract is in place and later amend the license for a more permanent adjustment to the license.

2. Confirmation that Perma-Fix can begin accepting sludge starting May 1, 2009.

   Please see above response.

There may be additional information needed, but that is all I have for now. Again, an email would be sufficient to provide the information.

Please call if you want to discuss.

Kind Regards,
Melanie

Melanie M. Davis, P.E. | **Project Manager/Senior Geotechnical Engineer**
Main 970.223.9600 | Fax 970.223.7171
melanie.davis@tetratech.com

Tetra Tech | Complex World, **Clear Solutions™**
3801 Automation Way | Suite 100 | Fort Collins, Colorado | 80524
www.tetratech.com

NOTICE OF CONFIDENTIALITY *This message (including any attachments) contains information confidential to Tetra Tech, Inc. and its subsidiaries. It is intended for a specific individual and purpose, and is protected by law. If you are not the intended recipient, you should delete this message. Any disclosure, copying, or unauthorized action based on it, is strictly prohibited.*

Attachment 5
Forms submitted to American Ecology, Perma-Fix and Washington Department of Ecology

STATE OF WASHINGTON
DEPARTMENT OF ECOLOGY
P.O. Box 47600 • Olympia, Washington 98504-7600
(360) 407-6000 • TDD Only (Hearing Impaired) (360) 407-6006

TO: Applicant

FROM: Diane Hallisy
Nuclear Waste Program

SUBJECT: Application for a Site Use Permit to Dispose of
Low-Level Radioactive Waste in Washington State

Enclosed is an application form for a Generator Site Use Permit and a permit fee schedule to enable you to calculate the permit fee due in accordance with Chapter 173-326 WAC, Commercial Low-Level Radioactive Waste Disposal -- Site Use Permits, accessible online at http://www.ecy.wa.gov/biblio/wac173326.html .
NOTE: This application is for generators of low-level radioactive wastes within the Northwest Interstate and Rocky Mountain compacts only. If your waste stream contains N.A.R.M. (naturally occurring or accelerator produced radioactive material) or Exempt wastes, you must apply for a separate disposal permit for those portions of the waste.

All items on the application must be answered. Completed applications with full payment should be returned to the address listed on the application. Failure to provide complete information (including the 9-digit Zipcode) on the application form, or lack of accompanying payment, will delay processing your application. Please note that the permit period runs from March 1 through February 28 of the following year. Permit fees for permits issued for less than the twelve month period will not be pro-rated. **USE THIS LETTER AS AN ORIGINAL INVOICE.**

In accordance with Washington State's Dangerous Waste Regulations, accessible online at http://www.ecy.wa.gov/biblio/wac173303.html , neither chemically hazardous nor mixed wastes (both chemically hazardous and radioactive) are acceptable for disposal at the low-level radioactive waste disposal site. These include, but are not limited to, scintillation fluids containing organic solvents (benzene, toluene, etc.).

If you have any questions or require additional information, please contact me at (360) 407-7109, or via e-mail at diha461@ecy.wa.gov.

DKH:dh
Enclosures

STATE OF WASHINGTON
SITE USE PERMIT FEE SCHEDULE
FOR THE
COMMERCIAL LOW-LEVEL RADIOACTIVE WASTE
DISPOSAL SITE,
RICHLAND, WASHINGTON

1. Generators, except nuclear utilities, who have previously held a site use permit for disposal of NARM, Exempt, or low-level radioactive wastes at the Richland site, must determine the amount of waste disposed by their organization in the most recent complete calendar year in which they held a permit. Using this volume figure, the Site Use Permit fee may be determined by referencing the table in paragraph 2.

2. Generators applying for a permit for the first time must estimate the volume of waste which they plan to dispose of during the period of March 1 through February 28 (low-level waste generators) or April 1 through March 31 (NARM and Exempt waste generators). Using this volume figure, the Site Use Permit fee may be determined by referencing the table below.

CATEGORY	**FEE**
Brokers	$ 1,000
< 50 cubic feet	$ 424
≥ 50 < 500 cubic feet	$ 848
≥ 500 < 1000 cubic feet	$ 2,120
≥ 1000 < 2500 cubic feet	$ 4,240
≥ 2500 cubic feet	$14,840
Nuclear Utilities	$42,400

STATE OF WASHINGTON
200 9
APPLICATION FOR A SITE USE PERMIT
TO DISPOSE OF LOW-LEVEL RADIOACTIVE WASTE
AT THE
COMMERCIAL LOW-LEVEL RADIOACTIVE WASTE
DISPOSAL SITE, RICHLAND, WASHINGTON

A. *Name of the company, organization, institution, etc., that is the original generator of the waste to be disposed of under this permit. (If the name changes, you must notify us by mail on the new letterhead.) Original generator means the last person who puts radioactive material to practical use. A broker may not list itself as the original generator of its client's radioactive material or waste, nor sign on behalf of the generator.*

Dawn Mining Company

GENERATOR'S NAME:

B. *Address where waste is generated.* ***(YOU MUST INCLUDE THE 9-DIGIT ZIP-CODE OR PERMIT WILL NOT BE PROCESSED****. Contact your local Post Office for further information.) Generators who own multiple facilities within the same state may apply for one permit if the same contact person within the generator's organization will be responsible for handling the waste shipments from the multiple facilities (attach a list of in-state facilities to the application). Otherwise, separate permits will be required. Facilities which are owned by the same generator but located in different states will require separate permits.*

Midnite Mine Water Treatment Plant	Dawn Mining Company
ADDRESS WHERE WASTE IS GENERATED	***MAILING ADDRESS (OF CONTACT PERSON)***
6834 Ford-Wellpinit Road	PO Box 250
Wellpinit WA 99040-6834	Ford WA 99013-0250
CITY STATE ZIP CODE (9 DIGITS)	***CITY STATE ZIP CODE (9 DIGITS)***

C. *Name of contact person who will be able to provide answers to any questions we may have on your application, waste generating activities or shipments.* ***(NOTE: PERMITS WILL BE MAILED ADDRESSED TO CONTACT PERSON; ENSURE MAILING ADDRESS AND CONTACT NAME AGREE.)***

Robert A. Nelson	Site Manager	(509) 258 - 4511 Ext
(First) (M.I.) (Last)	***TITLE***	***PHONE***

D. *A Nuclear Regulatory Commission or agreement state license is required for activities involving the possession, use, ownership, or transfer of most radioactive materials. List all license numbers pertaining to materials to be disposed. If you do not have a license relating to the materials to be disposed, please explain fully in the space provided.*

NRC LICENSE #(S): ***OR AGREEMENT STATE LICENSE #***

EXPIRATION DATE(S): ***EXPIRATION DATE:***

There is no current radioactive material license for the facility. The mine is under authority

IF YOU DO NOT HAVE EITHER LICENSE PLEASE EXPLAIN.

of the U.S. EPA

E. *Type of permit you are applying for. If you possess a current permit, or previously had a permit that expired, please state your permit number and volume of waste disposed of at the Richland site in the most recent calendar year in which you held a permit. First-time applicants should enter projected volume of waste to be disposed during the period March through February of the coming year.*

___ ***RENEWAL - SITE USE PERMIT #*** _____ ***- VOLUME DISPOSED DURING PREVIOUS PERMIT*** _____ ***(CU FT)*** _____ ***(YEAR)***

X ***FIRST-TIME APPLICANT - VOLUME PROJECTION (March - February)*** <50 ***(CU FT)***

F. *Calculate the permit fee due using the enclosed fee schedule and indicate amount of fee enclosed.*

AMOUNT ENCLOSED $_____

G. *Do you use a broker's services? If yes, indicate your broker's name and its Washington State Broker Site Use Permit number. If you use more than one broker, list them all.*

YES ____ ***NO*** X -- _____ -- _____

BROKER NAME(S) ***BROKER'S SITE USE PERMIT #(S)***

H. *Please indicate the one specific type which best describes your facility:*

1. ***FUEL CYCLE***
   - *a. NUCLEAR POWER REACTOR* ( )
   - *b. REACTOR FUEL PRODUCTION* ( )
   - *c. OTHER (NON-REACTOR)* (X)
2. ***MEDICAL***
   - *a. HOSPITAL/CLINIC* ( )
   - *b. RESEARCH* ( )
   - *c. LABORATORY* ( )
   - *d. OTHER* ( )
3. ***GOVERNMENT (NON-MEDICAL)***
   - *a. MILITARY* ( )
   - *b. RESEARCH* ( )
   - *c. REGULATORY* ( )
   - *d. OTHER* ( )
4. ***INDUSTRIAL***
   - *a. RESEARCH & DEVELOPMENT* ( )
   - *b. MANUFACTURING* ( )
   - *c. NUCLEAR PHARMACY* ( )
   - *d. WASTE BROKER* ( )
   - *e. OTHER* ( )
5. ***ACADEMIC (NON-MEDICAL)***
   - *a. RESEARCH* ( )
   - *b. LABORATORY* ( )
   - *c. REACTOR* ( )
   - *d. OTHER* ( )

I. *Types of wastes (e.g. solidified liquids, ion exchange resins, activated components, pipe scale, building rubble, etc.), and all radionuclides (e.g. C-14, H-3) that you will be shipping for disposal in Washington State.*

1. Source material, sludge from water treatment plant at uranium mine. Will be dried or solidified at Perma-Fix facility in Richland, WA prior to disposal.
   TYPES OF WASTES

2. Naturally occurring radionuclides, including uranium and progeny.
   RADIONUCLIDES

J. *Estimated volume of waste in cubic feet, and amount of activity in millicuries (mCi) that you will dispose of in Washington State in the next calendar year.* ***DO NOT USE SCIENTIFIC NOTATION FOR ACTIVITY.***

_____ ft^3 1000 *mCi*

K. *Estimated percentage of each class of waste. Total of percentage from all classes should equal 100%. (See WAC 246-249-040 online at* http://search.leg.wa.gov/wslwac/WAC%20246%20%20TITLE/WAC%20246%20-249%20%20CHAPTER/WAC%20246%20-249%20%20CHAPTER.htm

CLASS A (100 %) ***CLASS B*** (%) ***CLASS C*** (%)

L. *The permit fee is required at the time of submitting an application (WAC 173-326-040(1)). Make check or money order payable to the State of Washington, with your Washington State site use permit number (if renewing) written on the check or money order. Please provide the following information:*

CHECK OR MONEY ORDER # ***NAME OF COMPANY ISSUING CHECK OR MONEY ORDER***

M. *I certify that I am fully authorized to enter into the terms and conditions of this permit and am legally authorized to bind the applicant thereto. I hereby agree to comply with all applicable state and federal regulations related to the safe management of low-level radioactive waste (including the assurance that the waste contains no hazardous components as defined in Washington Administrative Code, Chapter 173-303, Dangerous Waste Regulations, and complies with the site operator's Radioactive Materials License and with all Department of Transportation packaging and shipping requirements as defined in 49 CFR 170 through 179). I understand that the State of Washington reserves the right to suspend or revoke this permit. The information provided on this form is complete and true to the best of my knowledge.*

SIGNATURE OF PERSON AUTHORIZED TO SIGN THIS APPLICATION (IN BLUE INK)

PRINTED NAME OF PERSON SIGNING ROBERT E. NELSON

TITLE VICE PRESIDENT + GEN. MGR.

DATE OF SIGNATURE FEB. 10, 2009

N. *Mail check or money order and application form (with original ink signature) to:*

Department of Ecology
Cashiering Section
PO Box 47611
Olympia, WA 98504-7611

Correspondence (other than application forms) may be addressed to diha461@ecy.wa.gov *(e-mail), or:*

Department of Ecology
Nuclear Waste Program
PO Box 47600
Olympia, WA 98504-7600

The Department of Ecology is an Equal Opportunity employer. If you need this document in an alternate format, please contact the Nuclear Waste Program at (360) 407-7109 (voice) or 1-800-833-6388 (TTY).

PLEASE ALLOW A MINIMUM OF 5 WEEKS TO PROCESS AND ISSUE SITE USE PERMIT. INCOMPLETE APPLICATION OR LATE PAYMENT WILL CAUSE DELAY.

Attachment 6
E-mail from American Ecology Regarding License Condition 10A Requirements and Ability to Dispose of Midnite Mine Sludge at their Facility

Davis, Melanie

From: Robert Haight [RHAIGHT@usecology.com]
Sent: Thursday, April 09, 2009 1:35 PM
To: Chad Hyslop; Lou.miller@live.com; Davis, Melanie
Cc: Chad Hyslop; Mike Ault
Subject: US Ecology Uranium

Chad asked me to send you our evaluation License Condition 10A requirements and our ability to dispose of Midnite Mine uranium bearing materials. See below.

Pursuant to your inquiry, Condition 10A of our State of Washington License #WN-I019-2 allows US Ecology Washington to dispose 1883 Curies of uranium (primarily U-234 and U-238) at our Richland LLRW disposal facility. To date we have disposed approximately 1795 Curies, leaving 88 curies remaining. We expect this remaining amount to last through site closure in 2056, unless large volumes of uranium are received in the interim. Shipments from Midnite Mine of approximately 1 Curie per year will not have a material impact on our limit for more than a decade. Based on business conditions and other factors US Ecology may pursue an increase in this limit at some future date. We believe the State of Washington will be open to these discussions. We are confident that our license will not prevent us from disposing Midnite Mine waste at the shipment schedule indicated.

Please let me know if you have any questions or need a formal written response.

Robert Haight, CHP
Radiation Protection Manager

Attachment 7
E-mail from Perma-Fix Regarding Cost Estimate for Processing Sludge at Perma-Fix

Davis, Melanie

From: John H. Hagan [jhagan@perma-fix.com]
Sent: Thursday, April 09, 2009 4:08 PM
To: Davis, Melanie
Cc: 'Lou Miller'; 'Grondin, Richard'
Subject: RE: Perma-Fix Budgetary Estimate No. 2009-03-013, Rev. 1 - Midnite Mine sludge processing

From: John H. Hagan [mailto:jhagan@perma-fix.com]
Sent: Tuesday, March 24, 2009 3:08 PM
To: 'Lou Miller'
Cc: 'Grondin, Richard'; 'Turner, Zane'
Subject: RE: Perma-Fix Budgetary Estimate No. 2009-03-013 - Midnite Mine sludge processing

Mr. Miller,

Reference: Perma-Fix Northwest Waste Profile No. 2009-WPAFB-0001 [approved]

We are pleased to provide the below budgetary estimate for the treatment of sludges currently residing at the Dawn Mining Company located in Ford Washington. This treatment estimate includes waste treatment activities employed at PFNW that will render the subject sludges acceptable for disposal at the US Ecology disposal unit in Hanford.

- Waste Treatment Activities at PFNW: $3.50/lb
    - Assumptions:
    - Treatment activities may include both thermal and non-thermal treatment technologies as determined by PFNW
    - Waste is designated as a Low-Level Radioactive Waste (LLRW)
    - Pricing above does not include Mixed Low-level waste treatment services
    - Waste Profiling Services into PFNW: provided by PFNW
    - Waste Profiling Services into Disposal Unit: provided by PFNW
    - Pricing is based upon entire waste volume 1.5 – 2.0 million pounds/year
    - Client will deliver material to PFNW in a container system suitable for management at PFNW facility
    - Estimated shipment timeframe to PFNW: April through September
    - Disposal: provided by client at US Ecology disposal unit at Hanford
    - Transportation to PFNW: provided by client
    - Transportation to disposal: provided by Perma-Fix

Please note that we have provided this budgetary estimate in a timely effort to assist you with the off-site waste disposition activities related to your recent requests. We will gladly follow-up with a formal proposal at your request. Please let me know if you have any questions or would like to discuss the above in further detail.

We appreciate the opportunity to provide this budgetary estimate to the Dawn Mining Company.

Thank you,
John H. Hagan
Regional Sales Manager
Perma-Fix Environmental Services, Inc.
(949) 939-7404

Attachment 8
E-mail from American Ecology Regarding Cost Estimate for Processing Sludge at Perma-Fix

FW: Dawn Mining

From: **Chad Hyslop** (CHYSLOP@americanecology.com)
Sent: Mon 1/05/09 12:18 PM
To: Lou Miller (lou.miller@live.com)
Cc: Tray Caldwell (TCALDWELL@usecology.com)
Attachments: Dawn Mining Estimated Affect on Rates.xls (62.6 KB)

Lou;

Attached is the cost estimate for LLRW uranium disposal at USEW.

Please note Tray used 20,000 cuft in 2009 for this estimate. As you can see, our site Revenue Requirement (green cell) is $5,275,000.

If you participated in our rate survey for 2009 (ending in March), you could expect a cost of about $2,333,000 (yellow cells), with a $371,000 rebate at the end of the year, for a total net cost of $1,961,000.

If you did not participate in our rate survey but still shipped the same amount of waste, your up-front cost would be $3,576,000 (pink cells), with a $1,592,000 rebate, for a total net cost of $1,984,000.

Either way, your net cost is about the same, and your average disposal price is ~$98/cuft.

Please note that all of these calculations are based on estimates that we will need to refine together. However, this should give you a pretty good idea of costs and how our rate structure works.

Please call Tray or me with any questions (numbers below).

Thanks,

Chad

From: Tray Caldwell
Sent: Tuesday, December 30, 2008 7:22 PM
To: Chad Hyslop
Subject: RE: Dawn Mining

Chad,

Here is the disposal cost estimate. Give me a call tomorrow if you have questions when you look at it. Of course, this is based on a lot of assumptions but it gives a pretty good idea and shows how either way will be similar net amounts.

Tray Caldwell
US Ecology Washington, Inc.
tcaldwell@usecology.com
(509) 946-4945
(509) 946-5495 fax

From: Chad Hyslop
Sent: Thursday, December 18, 2008 2:06 PM
To: Lou Miller
Cc: Tray Caldwell
Subject: FW: documents

Lou;

Attached are the documents that we will need completed to begin receiving LLRW shipments from Dawn Mining. The key document with fees associated is the Site Use Permit.

We have also attached the "projection form" for your reference. We understand you aren't ready to submit this yet. Our final projection is due to our regulators by the end of March, so we still have time.

Tray Caldwell is our LLRW rate expert. He will work up an estimate for you of what your disposal costs would be in 2009 for 15,000 to 20,000 cubic feet of LLRW Class A uranium waste at ~1 to 2 nCi/g uranium. The estimate will include 1) expected costs if you were to participate in the rate setting process, and 2) expected costs if you did not. Tray will be on vacation next week so you will receive this estimate the week of the 29th.

Please let us know if you have any questions or there is any additional information we can provide.

Thanks,

Chad

Chad Hyslop
Director of Sales & Marketing
American Ecology & US Ecology subsidiaries
300 East Mallard, Suite 300
Boise, ID 83706
Direct (208) 319-1604
Cell (208) 794-3415
Fax (208) 331-7900
chyslop@americanecology.com

From: Tray Caldwell
Sent: Thursday, December 18, 2008 2:09 PM
To: Chad Hyslop
Subject: documents

Here are all the documents I can think of for sending LLRW. I checked with Mike and he didn't add any.
The first four richland waste criteria, credit app, lowlevel generator (registration), and lowlevel radioactive (a waste shipment certification for the state) are all found on our website.
The 2009 projection form would be useful if they know before the end of March so I can include it in the rate filing.
The llrwpkg (site use permit application) is from the State of Washington Department of Ecology website.
This disposal contract is just a basic contract.

Tray Caldwell
US Ecology Washington, Inc.
tcaldwell@usecology.com
(509) 946-4945
(509) 946-5495 fax

US Ecology Washington, Inc.
Affect of Additional Volume on 2009 Rates and
Possible Refund if not Included in Final Rate Calculation

Assumptions: Additional 20,000 cu. ft., 34 shipments, and 204 containers all < = 200 mR/hr.

	Rate Components					
	Site Availability Charge (SAC)	Volume	Shipments	Containers	Dose Rate	TOTAL
Estimated Final Rates Effective May 1, 2009						
Revenue requirement for 2009	700,004	1,853,695	627,675	1,261,217	832,990	5,275,581
Projections for 2009		31,916	67	294		
"Safety Margin"		80%	80%	80%	Block 1 rate	
Billing determinants for 2009 rates		25,533	54	235	calculated for	
Rates for 2009, before rounding		$ 72.60	$ 11,710.35	$ 5,362.32	<=200 mR/hr	
Rates for 2009, rounded		$ 72.60	$ 11,710.00	$ 5,360.00	$ 131.00	
Affect of additional 20,000 cu.ft., 34 shipments, and 204 containers all <= 200 mR/hr.:						
Revenue requirement for 2009	827,986	1,801,846	610,119	1,225,940	809,690	5,275,581
Projections for 2009 plus additional		51,916	101	498		
"Safety Margin"		80%	80%	80%	Block 1 rate	
Billing determinants for 2009 rates		41,533	81	398	calculated for	
Rates for 2009, before rounding		$ 43.38	$ 7,550.98	$ 3,077.16	<=200 mR/hr	
Rates for 2009, rounded		$ 43.40	$ 7,550.00	$ 3,080.00	$ 124.00	
Using these adjusted rates, the total disposal charges		20,000	34	204	204	
plus the site availability charge would be:	$ 127,982	$ 868,000	$ 256,700	$ 628,320	$ 25,296	$ 1,906,298
Adding Tax and Fees ($1.75 cu. ft. PC&M, $6.50 cu. ft. Surcharge, $9.00 cu. ft. Site Surv., 3.3% B&O tax, and 1% WUTC Fee)						426,971
Total Charges:						$ 2,333,269
Average Cost Per Cubic Foot		$ 117				
Possible refund due to built in safety margin calculated	827,986	2,253,154	762,550	1,533,840	1,011,756	6,389,286
assuming all amounts of waste are sent in as projected:	827,986	1,801,846	610,119	1,225,940	809,690	5,275,581
	(0)	451,308	152,431	307,900	202,066	1,113,705
Estimated refund share:		0.39	0.34	0.41	0.03	
		173,861	51,313	126,128	5,052	$ 356,354
Adding Tax and Fees (3.3% B&O tax, and 1% WUTC Fee)						15,323
Total Possible Refund:						$ 371,677
Total Charges Net of Possible Refund:						$ 1,961,591
Average Cost Per Cubic Foot		$ 98				
Affect if additional volume is not included in final rate calculation and possible refund						
Revenue requirement for 2009	700,004	1,853,695	627,675	1,261,217	832,990	5,275,581
Projections for 2009		31,916	67	294		
"Safety Margin"		80%	80%	80%	Block 1 rate	
Billing determinants for 2009 rates		25,533	54	235	calculated for	
Rates for 2009, before rounding		$ 72.60	$ 11,710.35	$ 5,362.32	<=200 mR/hr	
Rates for 2009, rounded		$ 72.60	$ 11,710.00	$ 5,360.00	$ 131.00	
Using the non-adjusted rates, the total disposal charges		20,000	34	204	204	
plus the site availability charge would be:	$ 127,982	$ 1,452,000	$ 398,140	$ 1,093,440	$ 26,724	$ 3,098,286
Adding Tax and Fees ($1.75 cu. ft. PC&M, $6.50 cu. ft. Surcharge, $9.00 cu. ft. Site Surv., 3.3% B&O tax, and 1% WUTC Fee)						478,226
Total Charges:						$ 3,576,512
Average Cost Per Cubic Foot		$ 179				
Possible refund calculated assuming all amounts of waste are	827,986	3,769,102	1,182,710	2,669,280	1,038,480	9,487,558
sent in as projected plus the additional waste:	700,004	1,853,695	627,675	1,261,217	832,990	5,275,581
	127,982	1,915,407	555,035	1,408,063	205,490	4,211,977
Calculated share:	0.15	0.39	0.34	0.41	0.03	
	19,782	737,887	186,843	576,797	5,288	$ 1,526,597
Adding Tax and Fees (3.3% B&O tax, and 1% WUTC Fee)						65,644
Total Possible Refund:						$ 1,592,241
Total Charges Net of Possible Refund:						$ 1,984,271
Average Cost Per Cubic Foot		$ 99				

Attachment 9
E-mail from Denison Mining Regarding Processing Sludge at their Uranium Mill

FW: Water Treatment Sludge

From: **Lou Miller** (lou.miller@live.com)
Sent: Mon 12/29/08 3:58 PM
To: lou.miller@live.com

----- Original Message -----
From: Harold Roberts
To: Bob Nelson
Sent: Tuesday, December 23, 2008 3:06 PM
Subject: Re: Water Treatment Sludge

Bob:

We have been working on the sample of water treatment sludge received last month and so far the results look favorable for processing the material at the White Mesa Mill. We will need to finish the test work and work up a reagent, equipment and labor estimate to process the material. The basis of our proposal to accept the material for processing will depend on the amount of uranium recoverable and the processing cost. The uranium content is clearly high enough to qualify as an Alternate Feed material.

If we can agree on acceptable commercial terms then I believe we would be open to entering into a multi-year agreement, with allowance for periodic evaluation of the processing costs, and assuming the characteristics and uranium content of the material remains generally the same.

In order for us to accept the material as an Alternate Feed we will have to apply to the State of Utah for a license amendment to accept the material. That process can take anywhere from 6 months to a year. The process can get delayed by challenges from environmental groups, but this material should be easily defended. As long as the material is not a RCRA listed waste and it does not contain anything not contemplated by the Mill's original EIS, there should not be any big problems.

The material should be able to be shipped under the same regulations as uranium ore. I realize the material has an initial high moisture content, but as long as the material does not contain free liquid we should not have any receiving or storage issues. Our company web site has a copy of our Ore Transportation Procedures, under the Ore Purchase page. This should answer any questions about transportation of the material.

If you have any questions from your company management or the regulators I will be happy to talk with them.

Harold Roberts
Executive Vice President, US Operations

t: (303) 389-4160 | f: (303) 389-4125

DENISON MINES (USA) CORP

APPENDIX C
GENERAL OPERATING AND EQUIPMENT CRITERIA

1.0 WATER COLLECTION SYSTEM

1.1 Western Drainage Pump Station

- Pumps and Pipelines
  - Primary (Green) Pump:

    10 hp Electrically Driven Allis Chalmers 3X1.5,
    316 stainless centrifugal
    3 inch HDPE underground pipeline to the PCP

  - Secondary (Yellow) Pump:

    10 Hp Electrically Driven Allis Chalmers 3X1.5
    316 stainless centrifugal
    3 inch HDPE underground pipeline to the PCP

  - Tertiary (Red) Pump:

    10 hp Electrically Driven Allis Chalmers 3X1.5
    316 stainless centrifugal
    4 inch surface HDPE pipeline to the PCP

  - Back-up pump #1:

    10 hp Electrically Driven Grundfos 316 stainless submersible
    4 inch surface HDPE pipeline to the PCP

  - Back-up pump #2:

    15 hp Electrically Driven 4X3 Paco
    316 stainless centrifugal
    4 inch surface HDPE pipeline to the PCP

  - Back-up pump #3:

    Ford diesel powered 6X6 Gorman Rupp trash pump
    4 inch surface HDPE pipeline to the PCP

- Power
  - 3 phase, 15 KVA pole mount transformers
  - 200 amp. 480v. 3 phase service
  - Asco series 300, 70 amp. automatic transfer switch
  - Lima Silver Eagle 35 kw diesel generator set

1.2 Restroom Pump Station

- Pumps and Pipelines
  - Two ½ hp Electrically Driven Grundfos stainless submersible pumps
  - 1¼ in. polypipe to PCP

- Power
  - 15 kva pole mount transformer
  - 50 amp. 230v. single phase service
  - 230v. transfer switch
  - Kohler Power System 8.5Res, 8.5 kw Automatic start generator

1.3 East Seep Pump Station

- Pumps and Pipelines
  - McDonald ¾ hp Electrically Driven submersible pump
  - 1 inch polypipe to Pit 3

  - Grundfos ¾ hp Electrically Driven submersible pump
  - 1 inch polypipe to Pit 3.

- Power
  - 15 kva pole mount transformer
  - 200 amp. 230v. single phase service
  - 230v. transfer switch
  - Kohler Power System 8.5Res, 8.5 kw Automatic start generator

1.4 Far East Seep Pump Station

- Pumps and Pipelines
  - McDonald ½ hp Electrically Driven submersible pump
  - 1 ¼ inch polypipe to East Seep
  - Grundfos 1½ hp Electrically Driven submersible pump
  - 2 inch polypipe to Blood Pool

  - McDonald 2 hp Electrically Driven submersible pump

    - 1 ¼ inch polypipe to Blood Pool

- Power.
    - Feeds off of Blood Pool electrical system
    - 230v. transfer switch
    - Generator Power Fed from Far East Seep

1.5 Blood Pool Pump Station

- Pumps and Pipelines
    - 1½ hp Grundfos Electrically Driven submersible pump
    - 3 inch HDPE pipe to Pit 3

    - 2 hp Grundfos Electrically Driven submersible pump
    - 3 inch HDPE pipe to Pit 3

    - 2 hp Grundfos Electrically Driven submersible pump
    - 2 inch polypipe to Pit 3

- Power
    - 15 kva pole mount transformer
    - 100 amp. 230v. single phase service
    - 230v. transfer switch
    - Kohler Power Systems 18Res, 18 kw Automatic start generator

1.6 PCP Pump Station

- Pumps and Pipelines
    - 40 hp Electrically Driven Allis Chalmers 316SS 3X2 centrifugal pump
    - 4 inch HDPE pipe.

    - 40 hp Electrically Driven Gould 316SS 3X2 centrifugal pump
    - 4 inch HDPE pipe.

    - 671 Diesel powered 6X6 Gorman Rupp centrifugal
    - 6 inch HDPE pipe.

- Power
  - Three 37.5 kva pole mount transformers
  - 200 amp. 480v. three phase service
  - 100 kw Cummins generator set

2.0 PUMPING STATION, PLANT CONVEYANCE PIPELINE, AND WATER TREATMENT PLANT INFLUENT SYSTEM

2.1 Pit 3

- Pit 3 pump
  Pump Capacity = 600 gpm

  Normal Operating Flow = 450 gpm

  3”x4”x8” Stainless Steel Centrifugal Durco 3600 Pump

  Model # DT-222341, 480 Volt, 3-Pahse

  Electrically Driven 75 hP, 3560 RPM Motor, Frame 365TS
- Pit 3 conveyance piping to plant – 6-Inch HDPE x 3,400 feet
- Pit 3 hand control valve – 4-Inch Int Grn. Sander
  FNW-461 Stainless Steel
- Pit 3 4-Inch Blancett flow meter/totalizer
  134-400 Stainless Steel

2.2 Pit 4

- Pit 4 pump
  Pump Capacity = 300 gpm

  Normal Operating Flow = 50-70 gpm

  Gorman Rupp Trash Pump

  Model 16C2-B, Cast Iron

  Diesel Driven 150 hP, Ford 15-D Motor
- Pit 4 conveyance piping to plant – 3-Inch HDPE
- Pit 4 2-Inch manual valve
  Grinnell steel, flange mount butterfly valve
- Pit 4 2-Inch pressure control valve
  Watts 208, Steel
- Pit 4 2-Inch hand control valve
  Tufline steel ball valve, J8788
- Pit 4 2-Inch hand diversion valves to chemical makeup
  Grinnell steel, flange mount butterfly valve

3.0 PRIMARY TREATMENT SYSTEM

3.1 Barium Chloride Feed System

- Tank:
  Capacity – 1,000 gallons
  Diameter – 6 feet 0 inches
  Height – 4 feet 10 inches
  Mixing – Yes
  Material – steel

- Agitator – Belt driven steel
-
- Barium Chloride Transfer Pump – Barium Chloride Tank to BaCl2 Storage Tank
  2”x1 ½ ” Galigher Vacseal Stainless Centrifugal Pump
  Electrically Driven 2 hP Dayton Motor, Model 27935K
- Barium Chloride stainless metering pump, ¼ hP Milton Roy Diaphragm Pump
  Model #R-220A-117
  5 gpm @ 925 psi
- Barium chloride mixed feed is 50 g/L fed at a rate of 170-180 mL/min

3.2 Neutralization Tank #1

- Tank:
  Capacity – 5,600 gallons
  Diameter – 9 feet 11 inches
  Height – 11 feet 10 inches
  Mixing – Yes
  Material – Polyethylene

- Agitator – Belt driven steel
  HP – 10

- Feed Source & Flow Rates Pit 3 (Direct Feed): 450 gpm
  Clarifier #1 Recirculation: 15 gpm
  Clarifier #2 Recirculation: 40 gpm

- pH of Reactor Contents Normally 8.0
  Total Effluent from Tank #1: 500-510 gpm

3.3 Neutralization Tank #2

- Tank:
  Capacity – 5,600 gallons
  Diameter – 9 feet 11 inches
  Height – 11 feet 10 inches
  Mixing – Yes

Material – Polyethylene

- Agitator – Belt driven steel
  HP – 10

- Feed Source & Flow Rates Lime Slurry – Sufficient to maintain pH
  Neutralization Tank #1 (gravity overflow): 500-510 gpm
  Clarifier #2 Recirculation: 40 gpm

- Valve Positions Lime Slurry Flow Control: Partially Open (pH dependant)
-
- pH of Reactor Contents Normally 9.9

3.4 Neutralization Tank #3

- Tank:
  Capacity – 5,600 gallons
  Diameter – 9 feet 11 inches
  Height – 11 feet 10 inches
  Mixing – Yes
  Material – Polyethylene

- Agitator – Belt driven steel
  HP – 10

- Feed Source & Flow Rates Neutralization Tank #2 (gravity overflow): 500-510 gpm
-
- pH indicator and recorder
  Omega pH TX-92
  Normal operating pH of Tank #3 = 9.85

3.5 Neutralization Surge Tank

- Tank:
  Capacity – 2,500 gallons
  Diameter – 6 feet
  Height – 12 feet
  Mixing – No
  Material – Fiberglass

- Feed Source & Flow Rates Neutralization Tank #3 (gravity overflow): 500-510 gpm
  Centrate Surge Tank: 10 gpm

- Valve Positions Clarifier Feed Pump Inlet and Discharge Valves: OPEN

Hydraulic Retention Time of neutralization circuit is at least 30 minutes

3.6 Lime Slurry System

- Lime bin (silo) – Manufactured by Tri-State Metal Fabrication – Spokane, WA

  Tank:
  - Capacity – 50 tons
  - Diameter – 12 feet
  - Height – 30.5 feet
  - Material – Steel
  - Mixing – No

- Lime bin activator
- Lime bin vent and filter
- Lime auger – US Gear Box 2 ½ hP
- Lime Slaker Tank:

  Tank:
  - Capacity – 4,800 gallons
  - Diameter – 9 feet 3 inches
  - Height – 9 feet 7 inches
  - Mixing – Yes
  - Material – Steel
  - Mixer motor – 20 hP gear Driven
    - Doris Gear Box model 207SM-15, 15:1 gear ratio

- Lime Day Tank:

  Tank:
  - Capacity – 6,800 gallons
  - Diameter – 9 feet 11 inches
  - Height – 11 feet 10 inches
  - Mixing – Yes
  - Material –Polyethylene

- Lime Slurry Agitator - Slaker Tank
- Lime Slurry Agitator – Lime Slurry Day Tank, 20-foot diameter with 6 shafts
- Lime Slurry Transfer Pump – Slaker Tank to Day Tank

  4”x3” Rubber Lined Galigher Vacseal Centrifugal Pump

  Electrically Driven 3 hP Allis Chalmers Motor, 215 Frame
- Lime Slurry Delivery Pump – From Day Tank to Neutralization tank #2

  2 ½”x2” Wilfly Cast Iron Centrifugal Pump

  Electrically Driven 5 hP Reliance Motor, 184T Frame

3.7 Flocculant Mix and Feed System

- Flocculant Mix Tank:

  Capacity – 1,450 gallons
  Diameter – 6 feet
  Height – 7 feet
  Mixing – Yes
  Material – Carbon Steel

- Flocculant Day Storage Tank:

  Capacity – 1,450 gallons
  Diameter – 6 feet
  Height – 7 feet
  Mixing – Yes
  Material – Carbon Steel

- Flocculant Agitators – Mix Tank, 14-Inch Agitator, 1 shaft, 4 blades
- Flocculant Agitators – Day Tank – NOT USED
- Flocculant Transfer Pump – Mix Tank to Day Tank, 1”x2”x6” 2 hP Stainless Peerless 571, 184 Frame
- Flocculant metering pumps, Two 1 hP Rubber Lined L-4 Moyno Rotary Pumps

  Normal operating flow = 1.5 gpm to clarifiers & 1.5 gpm to centrifuge
- Flocculant Pressure Tank – Set pressure @ 40 psi

3.8 Primary Solid Liquid Separation

- Two Clarifiers:

  Clarifier #1 Tank:
  Liquid Volume – Approximately 53,000 gal
  Diameter - 30 feet
  Height - 10 foot side wall
  Material - Steel
  Mixing - No, sludge rake

  Clarifier #2 Tank:
  Liquid Volume – Approximately 16,500 gal
  Diameter - 20 feet
  Height - 7 foot side wall
  Material - Steel
  Mixing - No, sludge rake

- Sludge Pumps:

  Clarifier #1 Sludge Pump
  2-Inch Air operated Versamatic V235 E2, Rubber lined ball and check with steel housing

  Clarifier #2 Sludge Pump –
  2-Inch Galigher Vacseal centrifugal rubber lines steel pump, Model DIS-VRA-105

- Rakes and Drives:

  One Rake and One Drive per Clarifier

- Local Hand Controls
- Sludge Steady Head Tank

  Tank:
  Capacity – 2,100 gal
  Diameter – 5 feet 11 inches
  Height – 10 feet 3 inches
  Material - Steel
  Mixing - No

3.9 Effluent Filtration System

- Two Filter Vessels:

  Tank:
  Operating Flux Rate - 2.6 gpm/ft^2 each
  Diameter - 11 feet
  Height - 10 feet
  Material - Steel

- Filter Discharge Tank (Clearwell):

  Tank:
  Capacity – 18,000 gal
  Diameter - 16 feet
  Height - 12 feet
  Material - Fiberglass
  Mixing - No

- Filter Backwash Surge Tank (Mudwell):

  Tank:
  Capacity - 9000 gal
  Diameter - 16 feet
  Height - 6 feet
  Material - Fiberglass
  Mixing - No

- Backwash Water Pump

  3-Inch Galigher Vacseal rubber lined steel centrifugal pump

  Normal Operating Flow = 600 gpm

  Electrically Driven 15 hP Motor, 284U Frame
- Backwash Air Compressor – Alup Kompressor SCK 26-115
- Backwash Air Lance
- Filter Backwash Surge Tank Transfer Pump – Surge Tank to Neutralization Tank #1

  2 ½ x 2-Inch rubber lined cast iron Galigher Vacseal centrifugal pump, Model D-15-VR-A-101

  Electrically Driven 5 hP Allis Chalmer Motor, 215 Frame
- Level Indicator - Filter Backwash Surge Tank
- Level Indicator - Filter Discharge Tank

3.10 Final pH Adjustment

- pH monitor

  Omega pH TX-92

  Normal operating pH = 8.0-8.5

- Acid metering pump – LMI, Model A761 36TS1 Stainless
- Sulfuric acid drum – 55 gallons

4.0 PLANT EFFLUENT SYSTEM

- Discharge pump

  3-Inch Galigher Vacseal centrifugal pump with ABB ASC-500 Variable Speed Drive

  Electrically Driven 20 hP Motor, Frame 286U

- Effluent pipe – 6-Inch HDPE
- Final pH meter and probe

  Omega pH TX-92 meter, PHE-4580 Probe
  Normal operating pH = 6.0-9.0

- Flow meter/totalizer - Blancett

5.0 SLUDGE HANDLING

- Two Centrifuges – Sharples 3400, 16-Inch Diameter x 4-Feet
- Centrifuge Feed Pumps – Moyno L-4, 1.5 hP rubber lined
- Discharge Conveyor – 24” x 36”
- Centrate Surge Tank

  Tank:

  Capacity – 52.6 gal
  Diameter – 30 inches
  Height - 42 inches
  Material - Steel
  Mixing - No

APPENDIX D
DAILY OPERATING LOG

Dawn Mining Company – Water Treatment Plant
24 Hour Daily Report

Date:_____
First Shift, Name:_____ Section Shift, Name:_____

	0700	0900	1100	1300	1500	1700	1900	2100	2300	0100	0300	0500
pH-Neut. Tank #1 Grab												
pH-Neut, Tank #2 Auto/Grab												
pH-Neut, Tank #3 Auto/Grab												
pH-Chevron O.F.												
pH-Clarifier O.F.												
pH-Entering Sand Filters												
Plant Feed Rate gpm												
Flow Rate of Discharge gpm												
Discharge Location												
Discharge pH Auto/Grab												
BacL/2 Tank Meas. (ins.)												
BacL/2 Flow (ml/min)												
Antiscalant (ml/min)												
Acid (ml/min)												
Floc Flow Cent #2 0.4 gpm 15 hrs												
Centrifuge Back Drive Diff #1/#2												
Dry Lime Transfer (min)												
Lime Transfer (ins)												
Floc Mixed (lbs./batch)												
Flushed Centrifuge												
Samples water												
Time Truck Moved												

Comments:	Safety Check

Date:_____

WATER TREATMENT PLANT
Supervisors Daily Report
Report Period – previous 24 hours

Pit Level:

Pit 3:_____ Pit 4:_____ Precipitation:_____

Flow Rate Data:

Pit #3 (GPM):_____ Time:_____ Totalizer Reading:_____

Plant Discharge (GPM): _____ Time:_____ Totalizer Reading:_____

Pit #4 (GPM):_____ Time:_____ Totalizer Reading:_____

Operational Data:

Hours Discharged:_____

Hours Returned to Pit #3:_____

Hours Shut Down:_____

Tons of Lime Delivered:_____

Lime Auger Operated for _____ hours

Total Floc Mixed for Period _____ lbs (dry)

Other:

1. Are film badges being worn? ☐ Yes ☐ No
2. Are personnel/vehicle surveys being completed? ☐ Yes ☐ No
3. Are sludge splatter being cleaned up in a timely manner? ☐ Yes ☐ No
5. Paint Filter Liquid Test: ☐ OK ☐ Failed Percent of Solids: _____ %

Sludge Production Gross Weight (wet):

International _____
Previous trip return inspection ☐ OK

Ford _____
Previous trip return inspection ☐ OK

Truck Load # _____
Fuel pumped: _____ gallons
Vehicle Inspection:

International	OK?	Comments
Brakes	☐	_____
Steering	☐	_____
Tires	☐	_____
Lights	☐	_____
Emergency blinkers, turn signals, brake lights		
Mirrors	☐	_____
Tailgate	☐	_____
Emergency Equip	☐	_____
Sludge Kit	☐	_____
Operating Fluids	☐	_____
Fire Extinguisher	☐	_____

Truck Load # _____
Fuel pumped: _____ gallons
Vehicle Inspection:

Ford	OK?	Comments
Brakes	☐	_____
Steering	☐	_____
Tires	☐	_____
Lights	☐	_____
Emergency blinkers, turn signals, brake lights		
Mirrors	☐	_____
Tailgate	☐	_____
Emergency Equip	☐	_____
Sludge Kit	☐	_____
Operating Fluids	☐	_____
Fire Extinguisher	☐	_____

APPENDIX E
MANUFACTURER OPERATIONS AND MAINTENANCE MANUALS

Appendix E
Manufacturer Operations and Maintenance Manuals
Index

1. Versa-Matic E2 2-inch Pumps with Rubber Elastomers
2. Asea Brown Bovari Installation and Start Up Manual for ACS 501 Adjustable Frequency AC Drives 1-75 HP, Series D
3. Wilfley Operating Handbook for Centrifugal Sand Pump Model K
4. Milton Roy Company mROY Controlled Volume Pump
5. Durion Company Installation Operation and Maintenance of Mark II Durcopumps
6. Gorman Rupp 66-B2-6031C
7. Robbins & Myers Operations – Assembly Instructions and Parts List for “L4” Drive End
8. Blancett Fluid Flow Meters BL-5100 Loop Powered 4-20 MA Transmitter
9. Galigher Company Horizontal Vacseal Pumps
10. U.S. Motors Varidrive Installation and Maintenance Manual
11. Galigher Vertical Sump Pumps
12. Kohler Power Systems 8.5/12Res Generator
13. Kohler Power Systems 18Res Generator
14. Kohler Residential/Commercial Generator Sets Operation Manual

Versa-Matic E2 2-inch Pumps with Rubber Elastomers

E2, 2" Pumps with Rubber Elastomers Assembly Drawing & Parts List

Item	Description	Qty.	Pump Model Number				
			E2A Aluminum Screen	E2A Aluminum Footed	E2C Cast Iron Footed	E2S 316 SS Footed	E2H Hastelloy Footed
1	Air Chamber/left	1	P24-101L				
2	Air Chamber/right	1	P24-101R				
3	Shaft	1	P24-103				
4	Pilot Shaft	1	P24-104				
5	Bushing, Threaded	2	P24-105				
6	Pilot Valve Spacer Ring	2	P24-106				
7	Pilot Valve O-Rings	2	P24-107				
8	Stop Nut	2	P24-108				
9	Bolt	48	P24-110				
10	Valve Assembly (Items 11-21)	1	P24-200				
11	Valve Body	1	P24-201				
12	Gasket, Valve Body	1	P24-202				
13	Sleeve, Valve Body	1	P24-203				
14	Spool, Air Supply	1	P24-204				
15	Gasket, End Cap	2	P24-206				
16							
17							
18	Cap Screw	13	P24-208				
19	Air Valve Screen	1	P24-210				
20	Air Inlet Bushing	1	V160AP				
21	End Cap Assembly	2	P24-300				
22	Center Block Assembly (Items 23-26)	1	P24-400				
23	Center Block	1	P24-401				
24	Bearing Sleeve	1	P24-402				
25	Center Block O-Ring	2	P24-403				
26	Center Block Gasket	2	P24-109				
27	O-Ring	2	V223D (use with V224 diaphragm)				
28	Inner Diaphragm Plate	2	*V221B				
			**V226B				
29	Outer Diaphragm Plate	2	*WV8221		*WV8221B	*SV8221	*HV8221
			**WV8226		**SV8226	**SV8226	**HV8226
30	Water Chamber	2	V235		WV235	SV235	HV235
31	Discharge Manifold	1	V236		WV236	SV236	HV236
32	Inlet Housing - Footed	1	N/R	V237F	WV237F	SV237F	HV237F
33	Inlet Housing - Screened	1	V237		N/R		
34	Screen (For P/N V237)	1	V238		N/R		
35	Bolt	3	V240		N/R		
36	Hook-Up Cover	1	V242		N/R		
37	Large Clamp Assembly	2	V230			SV230	
38	Small Clamp Assembly	4	V239			SV239	
39	Diaphragm	2	Versa-Rugged V224				
			Versa-Dome V225				
40	Valve Seat	4	V240				
41	Valve Ball	4	V241 BN				

(*) Indicates parts that are used with V224 diaphragms.

(**)Indicates parts that are used with V225 diaphragms.

Note: Diaphragms, valve balls and valve seats are available in nine different materials.

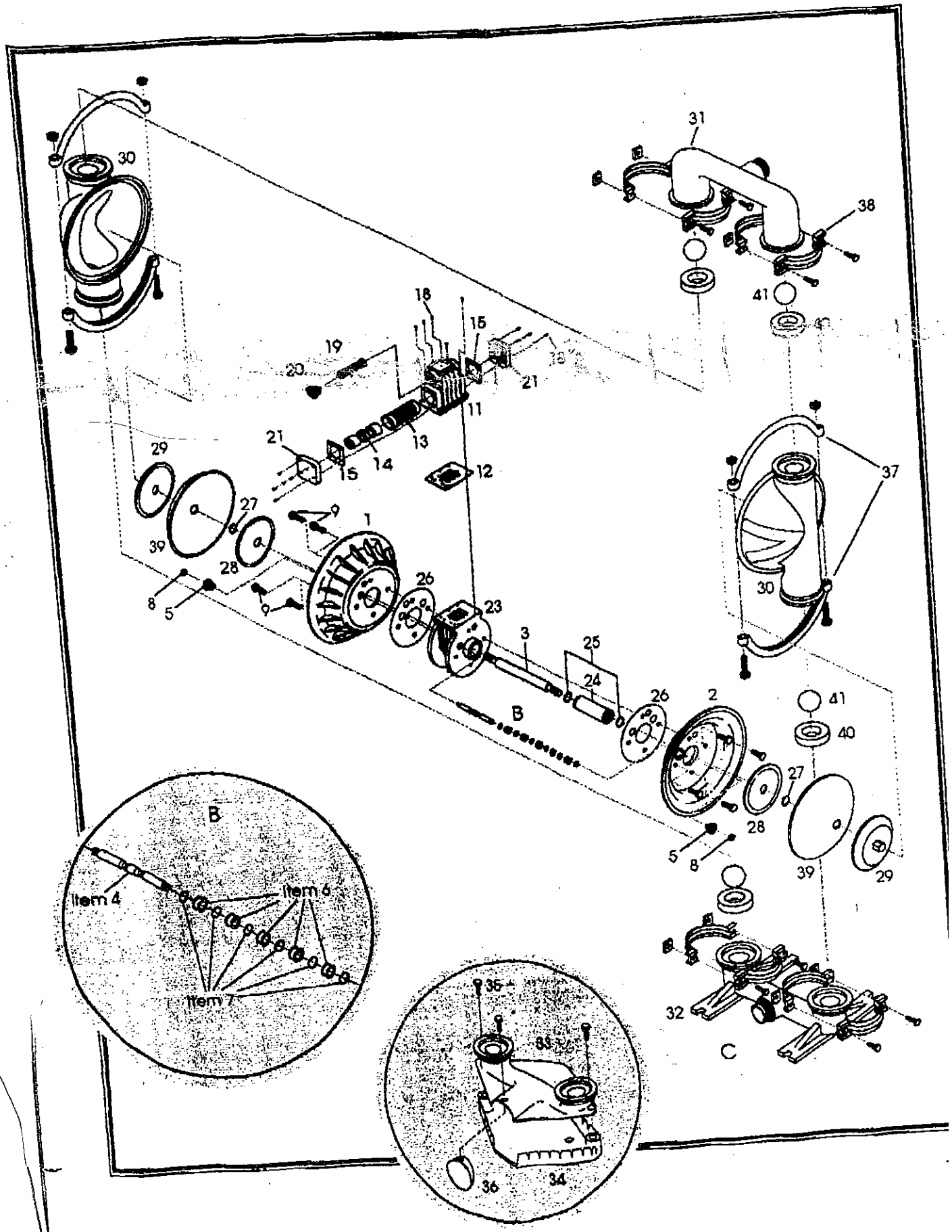
30
31
38
41
40
18
15
19
20
21
11
13
14
12
29
27
39
28
1
9
8
5
26
23
3
25
24
B
2
37
Item 4
Item 6
Item 7
35
33
36
34
32
C

Asea Brown Bovari Installation and Start Up Manual for ACS 501 Adjustable Frequency AC Drives 1-75 HP, Series D

ACS 501

Installation & Start-up Manual

ACS 501 Adjustable Frequency AC Drives 1 to 75 HP, Series B

ACS 501-04B
EFFECTIVE 5/1/93
SUPERCEDES 1/1/93

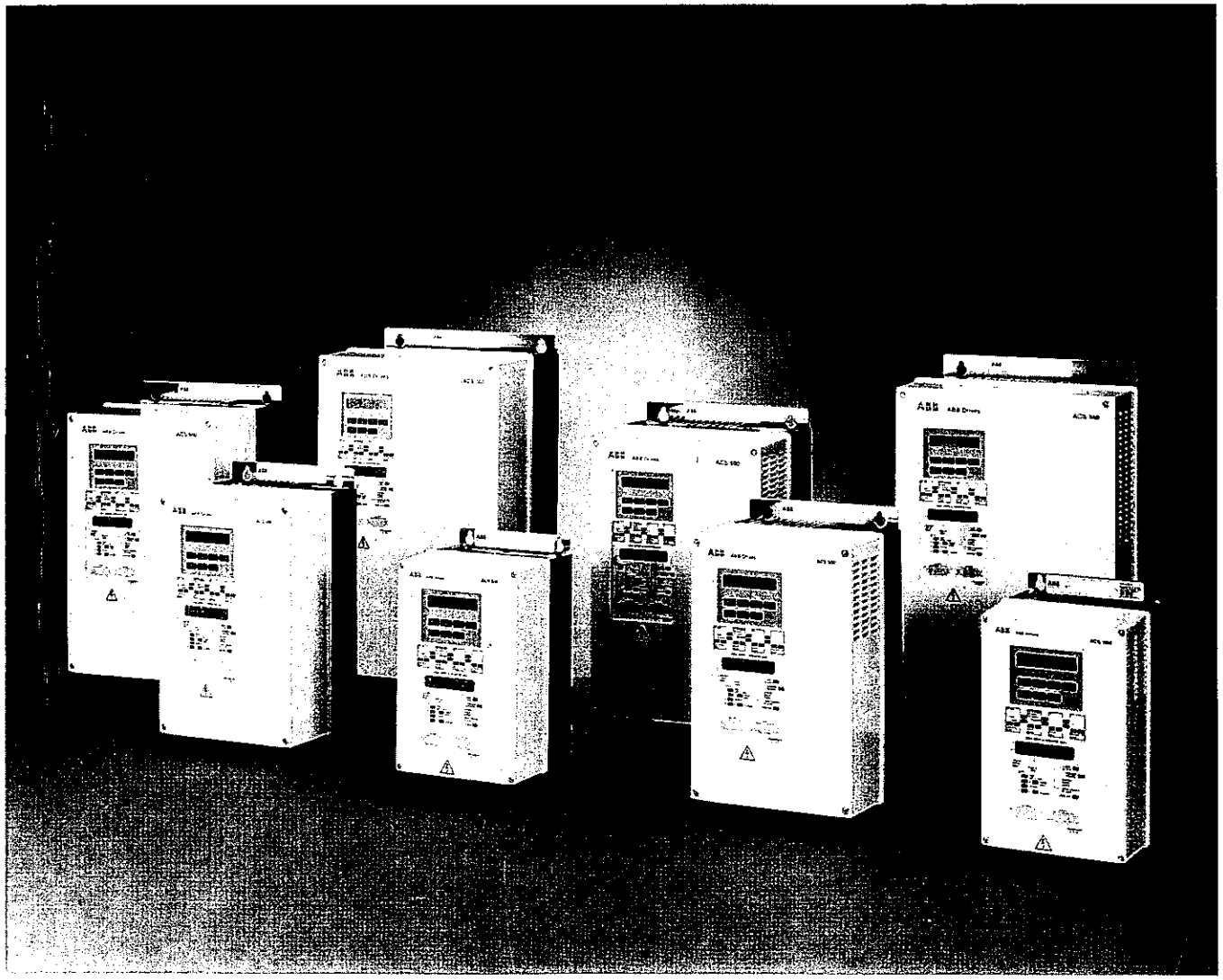

ABB Drives Inc.

ABB
ASEA BROWN BOVERI

ACS 501 Adjustable Frequency AC Drives 1 to 75 HP, Series B

Installation & Start-up Manual

ACS 501-04B

EFFECTIVE: 1993-05-01
SUPERCEDES: 1993-01-01

© 1993 ABB Drives Inc. All Rights Reserved.

Safety Instructions

General Safety Instructions

Warnings in this manual appear in either of two ways:

- *Dangerous voltage warnings*, preceded by a Dangerous Voltage symbol, indicate the presence of voltages which may cause death or serious injury. These warnings describe procedures to avoid death or serious injury.
- *General warnings*, preceded by a General Warning symbol, indicate situations or conditions which may cause death or serious injury. These warnings describe procedures to avoid death or serious injury.

CAUTIONS inform you of situations or conditions which will damage machinery or cause additional motor-operation down-time if you do not take suggested steps to correct or address such situations or conditions.

Note: Notes provide you with additional and useful information. Although less urgent than cautions and warnings, notes are important and should not be ignored.

Warning Symbols

For your own safety please pay special attention to instructions containing these symbols:

This warning symbol indicates the presence of dangerous voltage. This symbol informs you of high voltage conditions, situations, and locations that may cause death or serious injury if you do not follow precautions and proper steps.

This warning symbol indicates a general warning.

This warning symbol indicates an electrostatic discharge hazard.

Warnings, Cautions, and Notes

WARNING! Your drive contains dangerous voltages when connected to the line power. Always check that the ACS 501 is safe, after disconnecting the power, by measuring the DC bus voltage and line input voltage. Failure to check voltages could cause death or serious injury. Only a qualified electrician should carry out the electrical installation.

Note that the Motor Control Card of the ACS 501 is at DC bus voltage potential.

The DC bus capacitors contain dangerous DC voltage levels (1.35 x V_{IN}). After disconnecting the supply, wait at least five minutes after the display readout on the control panel has disappeared before taking any measurements.

Dangerous external control voltages may be present on the relay outputs of the Control Interface Card and Option Cards.

CAUTION: Electrostatic Discharge (ESD) can damage electronic circuits. Do not handle any components without following the proper ESD precautions.

Table of Contents

Chapter 1 – Introduction

How To Use This Manual 1-1
Intended Audience 1-2
Conventions Used In This Manual 1-2
Control Panel Display 1-2
Control Panel Keys 1-2
Main 1-2
Group 1-2
Parameter 1-2
Press 1-2
Terminal Block 1-3
Warranty and Liability Information 1-3
Related Publications 1-3

Chapter 2 – Overview of the ACS 501

Nameplate Identification 2-1
General Information About Your ACS 501 2-2
Features and Functions 2-2
Control Panel Operation 2-5
Control Panel Display 2-5
Control Panel Keys 2-6
Application Macros Overview 2-8

Chapter 3 – Installation Instructions

Grounding and Ground Faults 3-1
Pre-Installation Planning 3-1
Environment 3-2
Mounting Area 3-3
Installation Site Power 3-5
Conduit Size 3-5
Power Wiring 3-6
Output Power Wiring 3-7
Control Wiring 3-9
Initial Inspection Procedure 3-9
Mechanical Installation 3-10
Power Connections 3-10
Input Wiring 3-10
Output Wiring 3-10
Dynamic Breaking 3-10
Insulation Checks 3-12
Terminal Connections 3-13

Control Connections 3-14
Available Control Locations 3-14
X50 3-15
Control Interface Card SNAT-759 Connections 3-17

Chapter 4 – Start-up Procedure

Safety Precautions 4-1
Installation Inspection 4-2
Start-up Data Parameters 4-3
Keypad Control Tests 4-5
Motor Disconnected from the ACS 501 4-5
Motor Connected to the ACS 501 4-6
Default Drive Parameters 4-7
Customizing Application Macro Parameters 4-7

Chapter 5 – Fault Tracing

Fault Indications 5-1
Fault Resetting 5-1
Fault History 5-2
Fault Erasing 5-2
Fault Tracing 5-3
Warning Messages 5-3
Fault Messages 5-4

Chapter 6 – Service and Maintenance

Electrostatic Discharge Precautions 6-1
Rectifier Tests 6-1
ACS 501 – 002, 003, and 005 6-2
ACS 501 – 007 to 040 6-3
DC Bus Capacitor Tests 6-6
ACS 501 – 002, 003, and 005 6-7
ACS 501 – 007 to 040 6-9
IGBT Module Tests 6-11
ACS 501 – 002, 003, and 005 6-11
ACS 501 – 007 to 040 6-14

Appendix A – ACS 501 Technical Data

Input Power A-1
Output Power A-1
Analog Inputs A-1
Auxiliary Voltage (for Controls) A-2
Digital Inputs A-2
Analog Outputs A-2
Digital Relay Outputs A-2
Environmental Limits A-2
Enclosures A-2

Glossary G-1

Index I-1

This page intentionally left blank.

Chapter 1 – Introduction

This chapter describes the purpose and contents of this manual, describes the intended audience, explains conventions used in this manual, and lists related publications.

How To Use This Manual

The purpose of this manual is to provide you with the information necessary to install, start-up, and service an ACS 501 Adjustable Frequency AC Drive rated 1 to 75 hp. This manual also describes features and functions of the drives and requirements such as external drive control connections, wiring, and cable sizes and routing.

ACS 501 user documentation also includes the *ACS 500 Adjustable Frequency AC Drives 2 to 350 HP Programming Manual Including Application Macros* which is provided with the drive.

Chapter 1 – Introduction, the chapter you are reading now, introduces you to the *ACS 501 Adjustable Frequency AC Drives 1 to 75 HP Installation & Start-up Manual* and conventions used throughout the manual.

Chapter 2 – Overview of the ACS 501 describes drive components and provides a brief introduction to Control Panel operation, the drive parameter menu system, and drive Application macros.

Chapter 3 – Installation Instructions describes planning for drive installation, new drive inspection, and drive mounting. This chapter also includes requirements and connections for input and output wiring and external control wiring.

Chapter 4 – Start–up Procedure describes safety, installation inspection, how to check default parameters and set start-up parameters, and how to test the drive with the motor disconnected and connected.

Chapter 5 – Fault Tracing describes troubleshooting procedures through fault messages, resetting faults, accessing stored information in the fault history, and tracing faults to their origins.

Chapter 6 – Service and Maintenance describes how to test main electrical drive components such as bridge rectifiers, diodes, bus capacitors, and IGBT modules.

Appendix A – ACS 501 Technical Data lists input and output voltages, amperage, and other useful data for each drive rated 1 to 75 hp.

Glossary lists and defines terms common to all ACS 501 drives.

Index helps you locate the page numbers of topics contained in this manual.

Intended Audience

The audience for this manual has:

- Knowledge of standard electrical wiring practices, electronic components, and electrical schematic symbols.
- Minimal knowledge of ABB product names and terminology.
- No experience or training in installing, operating, or servicing the ACS 501.

The audience for this manual will install, start-up, and service the ACS 501.

Conventions Used In This Manual

Listed below are terms and language conventions used in this manual. These terms and conventions are defined here to help you understand their meanings and applications throughout this manual. For a complete listing of ACS 501 terms, refer to the *Glossary* at the end of this manual.

Control Panel Display

The Control Panel display is an LCD readout of drive functions, drive parameter selections, and other drive information. Letters or numbers appear in the display according to which Control Panel keys you press.

Control Panel Keys

Control Panel keys are flat, labeled, push-button-type devices that allow you to monitor drive functions, select drive parameters, and change drive macros and settings.

Main

A main is the first level of programming. The Mains organize the Parameters into four main functional groups. A Main in this manual is the number corresponding to Group access. All Groups in the 10s range are accessed on the Control Panel through `CONTROL CONNECTIONS/MAIN 10`. Access Groups in the 20s range through `DRIVE PARAMETERS/MAIN 20`. Access Groups in the 30s range through `PROTECTION PARAMETER/MAIN 30`, and access Groups in the 40's range through `APPLIC PARAMETERS/MAIN 40`.

Group

A Group is a sub-set of a Main. Groups are grouped within Mains according to their 10s, 20s, 30s, or 40s range. For example, Groups numbered 30.1, 30.2, 30.3, and 30.4 are found in `PROTECTION PARAMETER/MAIN 30`. Parameters are accessed through Groups.

Parameter

A parameter is a sub-set of a Group, selected through the Control Panel keys. Parameters in this manual often are expressed as a number, a decimal (.), another number, a decimal, and another number. The first number at the left represents the Main. The number between the decimals represents the Group, for example, 20.2 (Start/Stop). The number at the right represents a Parameter within that group, for example, 4 (Brake Chopper). In this manual, Parameter 4 in Group 20.2 is expressed as Parameter 20.2.4.

Press

Press a key on the Control Panel to achieve a desired result. In this manual, individual Control Panel keys are enclosed in square brackets. For example, the Setting mode key is expressed as [*]. Refer to *Chapter 2 – Overview of the ACS 501, Control Panel Operation*, for details.

Terminal Block

A terminal block is a group of wire connections on a drive. This manual expresses specific terminal blocks and connections as a letter, usually X, a number, a colon (:), and another number. The letter and number to the left of the colon represent the name of the terminal block, for example, X25. The number to the right of the colon represents the terminal connection, for example 16, on the terminal block. In this manual, a terminal connection numbered 16, located on a terminal block named X25, is expressed as X25:16.

Warranty and Liability Information

The warranty for your ABB drive covers manufacturing defects. The manufacturer carries no responsibility for damage due to transport or unpacking.

In no event and under no circumstances shall the manufacturer be liable for damages and failures due to misuse, abuse, improper installation, or abnormal conditions of temperature, dust, or corrosives, or failures due to operation above rated capacities. Nor shall the manufacturer ever be liable for consequential and incidental damages.

The period of manufacturer's warranty is 12 months, and not more than 18 months, from the date of delivery.

Extended warranty may be available with certified start-up. Contact your local distributor for details.

Your local ABB Drives company or distributor may have a different warranty period, which is specified in their sales terms, conditions, and warranty terms.

If you have any questions concerning your ABB drive, contact your local distributor or ABB Drives office.

The technical data and specifications are valid at the time of printing. ABB reserves the right to subsequent alterations.

Related Publications

For related information, refer to the ABB *ACS 500 Adjustable Frequency AC Drives 2 to 350 HP Programming Manual Including Application Macros (ACS 500-05)* and the *ACS 501 with Option Pack Users Manual (ACS 500-08).*

This page intentionally left blank.

Chapter 2 – Overview of the ACS 501

This chapter describes the features and functions of the ACS 501, and includes illustrations and block diagrams. It also describes the ACS 501 hardware components and the Control Panel displays and keys. The last part of this chapter presents an overview of the Parameters menu system and Application macros.

Nameplate Identification

Figure 2-1 explains the drive code printed on the nameplate, located at the bottom of your drive between the mounting holes.

Figure 2-1 Explanation of ACS 501 Drive Code

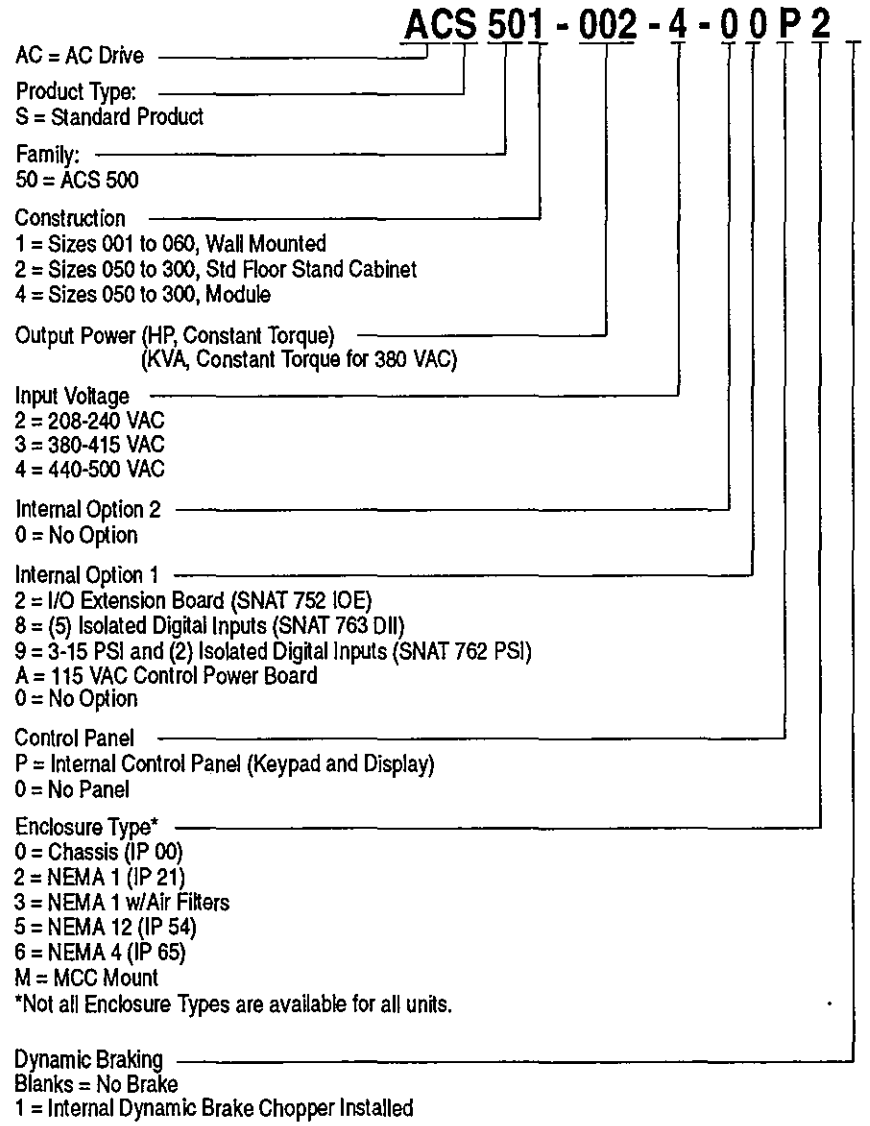

General Information About Your ACS 501

Features and Functions

Component Descriptions

A diode bridge converts line power almost entirely to active power. The displacement power factor approaches unity (>0.98) regardless of the speed or load of the connected motors.

The DC-Intermediate Circuit filters the DC-voltage ripple supplied by the Rectifier Stage. This section consists of an inductor and capacitors, as well as a charging circuit. The charging circuit limits the in-rush current when power is applied by directing the current through a resistor. Once the bus is charged, the resistor is shorted with a relay or SCR.

Note: The maximum number of chargings in one minute is four. In applications where frequent start/stop is required, electronic start/stop should be used with the unit powered continuously.

The Inverter Stage forms symmetrical three-phase AC voltage from the constant DC voltage supplied by the DC-Intermediate Circuit.

A Motor Control Card controls the Inverter Stage and monitors the operation of the ACS 501.

A Control Interface Card is the link between the operator and the ACS 501. It features a Control Panel with an alphanumeric display and keypad. A terminal block for external control connections is also located on the Control Interface Card.

The Control Interface Card is optically isolated from the line potential. The Control Interface Card common is connected to the chassis ground through a 10 megohm resistor.

Figure 2-2 shows a diagram of the hardware components and control functions of the ACS 501.

Table 2-1 Rating Table

Drive Type	Constant Torque			Variable Torque			I_N	Dimension Reference
	hp	Amps (Current Rating of Drive)		hp	Amps (Current Rating of Drive)			
		I_R	I_{IN}		I_{RSQ}	I_{INSQ}		
480 VAC								
ACS501-002-4	2.0	3.4	3.1	3.0	4.8	4.3	6.2	R2
ACS501-003-4	3.0	4.8	4.3	5.0	7.6	6.8	7.5	
ACS501-005-4	5.0	7.6	6.8	7.5	11.0	9.9	10.0	
ACS501-007-4	7.5	11.0	9.9	10.0	14.0	12.6	13.2	R3
ACS501-010-4	10.0	14.0	12.6	15.0	21.0	18.9	18.0	
ACS501-015-4	15.0	21.0	18.9	20.0	27.0	24.3	24.0	R4
ACS501-020-4	20.0	27.0	24.3	25.0	34.0	30.6	31.0	
ACS501-025-4	25.0	34.0	30.6	30.0	40.0	36.0	38.0	R5
ACS501-030-4	30.0	40.0	36.0	40.0	52.0	46.8	47.0	
ACS501-040-4	40.0	52.0	46.8	50.0	65.0	58.5	62.0	
ACS501-050-4	50.0	65.0	58.5	60.0	77.0	69.3	76.0	R5.5
ACS501-060-4	60.0	77.0	69.3	75.0	96.0	86.4	89.0	
230 VAC								
ACS501-001-2	1.0	4.0	3.6	2.0	7.5	6.8	6.2	R2
ACS501-002-2	2.0	7.5	6.8	3.0	10.6	9.6	10.0	
ACS501-003-2	3.0	10.6	9.6	5.0	16.8	15.2	13.2	R3
ACS501-005-2	5.0	16.8	15.2	7.5	24.2	21.8	18.0	
ACS501-007-2	7.5	24.2	21.8	10.0	30.9	27.8	24.0	R4
ACS501-010-2	10.0	30.9	27.8	15.0	46.2	41.6	31.0	
ACS501-015-2	15.0	46.2	41.6	20.0	59.4	53.5	47.0	R5
ACS501-020-2	20.0	59.4	53.5	25.0	74.8	67.4	62.0	

Figure 2-2 Diagram of ACS 501 Hardware Components and Control Functions

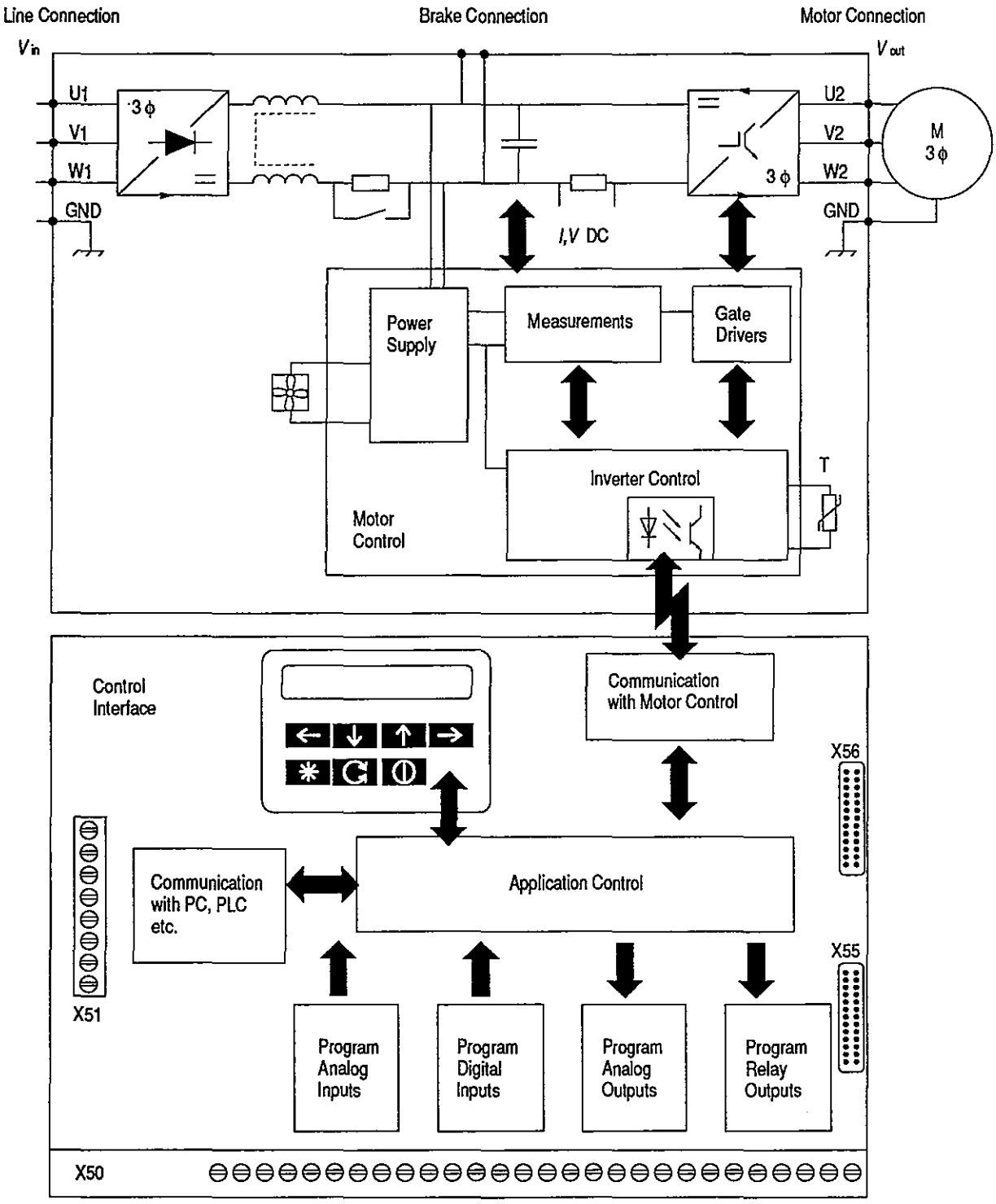

Control Panel Operation

Control Panel Display

The Control Panel, located on top of the Control Interface Card, has a 2x20 character alphanumeric LCD and a keypad.

The operation information, parameters and fault indications are displayed in nine languages: English, German, Italian, Spanish, Dutch, French, Danish, Finnish, and Swedish. The language selection is made in Start-up Data, Parameter A (Language).

Figure 2-3 shows control panel display indications.

Figure 2-3 Control Panel Displays

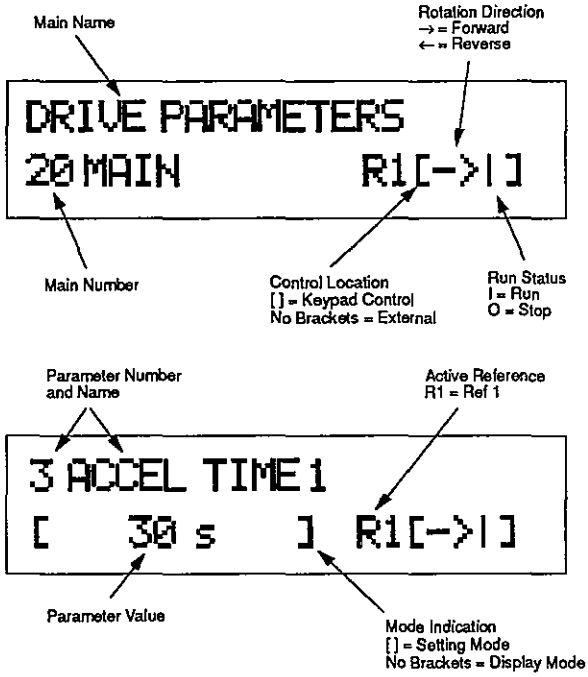

Control Panel Keys

Table 2-2 illustrates each Control Panel Key, how the keys are used in this manual's text, and describes the function of each key.

Table 2-2 Control Panel Keys

Control Panel Key	Text Reference	Function
✳	[*]	Selects the Setting mode and saves the selected parameter value.
→ ←	[Right Arrow] [Left Arrow]	**Steps between levels.** Selects between Operating Data, Main, Group, and Parameter levels. and In Setting Mode, returns to the Display mode without changing the Parameter value.
↑ ↓	[Up Arrow] [Down Arrow]	**Steps through choices within a level.** In Display mode, selects the next/previous Main, Group, or Parameter. and In Setting mode, increases/decreases parameter value.
↻	[Fwd/Rev]	Changes the rotation direction in Keypad control (refer to Parameter 10.1.3).
⏻	[Start/Stop]	Starts and stops the motor in Keypad control. Resets faults, warnings, and supervision indications.

Note: *To accelerate the change of parameter value, press and hold the [Up Arrow] or [Down Arrow] button.*

Figure 2-4 shows how to set Parameter 20.1.1 (Minimum Frequency) to 3 Hz.

Figure 2-4 Parameter Settings

```
1 OUTPUT FREQUENCY
    45.5 Hz      R1[->|]
```

Indent to Main level.

```
CONTROL CONNECTIONS
10 MAIN          R1[->|]
```

Select the required Main.

```
DRIVE PARAMETERS
20 MAIN          R1[->|]
```

Indent to Group level. Select the required Group by [Up Arrow] and [Down Arrow] keys.

```
FREQ/CURRENT LIMIT
20.1 GROUP       R1[->|]
```

Indent to Parameter level. Select the required Parameter by [Up Arrow] and [Down Arrow] key.

```
1 MINIMUM FREQUENCY
   0.00 Hz       R1[->|]
```

Change to Setting mode. Brackets indicate that the parameter value now can be changed.

```
1 MINIMUM FREQUENCY
[  0.00 Hz  ]    R1[->|]
```

Set the parameter value. If you want to cancel the change and return to Display mode, press [Right Arrow] or [Left Arrow], otherwise

```
1 MINIMUM FREQUENCY
[  3.00 Hz  ]    R1[->|]
```

Save the selected value to parameter memory. Brackets disappear indicating that the parameter value is stored in memory.

```
1 MINIMUM FREQUENCY
   3.00 Hz       R1[->|]
```

Return to Operating Data Parameter 1 (Output Frequency).

```
1 OUTPUT FREQUENCY
    45.5Hz       R1[->|]
```

Adjusting Display Contrast

The contrast of the LCD can be adjusted for optimal viewing. This can be done when the display is in the Main or Group level.

To adjust contrast, press and hold [*] and then press [Up Arrow] or [Down Arrow].

You may need to adjust the display contrast if the ACS 501 has been installed in a location with high ambient temperatures. The factory default setting is optimum for an ambient temperature between 59°F and 86°F (15°C and 30°C).

Application Macros Overview

Application macros are complete sets of default parameter settings for some typical applications. This allows all of the parameters to be set with the touch of a button.

When you select an Application macro, the parameters listed in the *ACS 500 Adjustable Frequency AC Drives 2 to 350 HP Programming Manual Including Application Macros* are set to a value suitable for a particular application. The parameters which are not included in the Application macro retain the factory settings. If you must adjust the parameter values, refer to the instructions in the *ACS 500 Adjustable Frequency AC Drives 2 to 350 HP Programming Manual Including Application Macros.*

Chapter 3 – Installation Instructions

This chapter explains how to install the ACS 501 and connect all power, motor, and control wiring. It also describes the initial inspection procedures.

Grounding and Ground Faults

The ACS 501 must always be grounded through a ground conductor connected to the ground terminal.

If the ACS 501 is connected to a system without system ground, the ground fault protection must be capable of starting at ground fault currents containing high frequency and DC components. The ACS 501 ground fault protection guards the variable frequency drive against ground faults occurring in the motor or the motor wiring.

Fault current protective switches do not necessarily operate properly with variable frequency drives. When using such switches their function should be checked at possible ground fault currents arising in a fault situation.

Pre-Installation Planning

The drives require overload protection in accordance with the National Electric Code.

The ACS 500 has been short circuit tested in accordance with UL508.

The R2-R5 drives are suitable for use on a circuit capable of delivering not more than 5,000 rms symmetrical Amperes, 480 Volts maximum; R5.5 10,000 rms symmetrical Amperes.

The drive is supplied with fast acting semiconductor fuses with the following interrupting capacities.

Table 3-1 Fuse Interrupting Capacities

Unit	Capacity
R2	20 kA
R3	50 kA
R4	100 kA
R5	100 kA
R5.5	200 kA

Environment

These drives are to be used in a heated, indoor controlled environment that is relatively free of moisture and conductive contaminates such as condensation, carbon dust, and the like.

The maximum ambient temperature allowed is 113°F (45°C) for an ACS 501 in a NEMA 1 enclosure for constant torque loads, when the load current is lower than or equal to the continuous rated constant torque current (I_R). The maximum ambient temperature allowed is 104°F (40°C) for an ACS 501 in a NEMA 12 enclosure for constant torque loads; and an ACS 501 in a NEMA 1 enclosure for variable torque loads, when the load current is lower than or equal to the continuous maximum load current (I_{RSQ}).

The cooling air must be clean and free from corrosive materials. When necessary the required cooling should be provided by using clean, dry air.

Table 3-2 Required Cooling Air Volume for ACS 501 Units

Unit	Cooling Air
R2	30 CFM (51 m^3/hr)
R3	60 CFM (102 m^3/hr)
R4	240 CFM (406 m^3/hr)
R5 & R5.5	330 CFM (560 m^3/hr)

If the cooling air contains dust, clean the cooling surfaces of the unit regularly using compressed air and a brush. If the ACS 501 is in a NEMA 1 enclosure, cover the vents to prevent the dust from entering the unit.

If the heat sink is not cleaned and it is not able to dissipate the expended heat, the ACS 501's thermal protection will operate, causing a fault indication which stops the drive. The ACS 501 can be started again when the temperature of the heat sink has fallen below the tripping level, which is 158°F (70°C).

The temperature of the heat sink can be read from the Control Panel Display, Operating Data Parameter 8 (Drive Temperature).

Mounting Area

Mounting the Control

When mounting the control take the following precautions.

- DO NOT mount in direct sunlight.
- DO NOT mount on surfaces with temperature above 104°F (40°C).
- DO NOT allow the ambient temperature around the ACS 501 to exceed the ambient temperature as stated in *Environment* above.
- Mount the ACS 501 vertically with the factory supplied conduit knockouts at the bottom.
- See Figure 3-1 for the space requirements.
- If units are to be mounted next to each other, each unit must have two inches (50 mm) of clear space, so that a total of four inches (100 mm) between two units is available for proper cooling.
- If units are mounted one above the other, at least 12 inches (300 mm) is required between the units.
- At least three (3) separate grounded conduits are required. One each for input, output, and control wiring.

Figure 3-1 shows the space requirement for adequate cooling of the ACS 501.

Figure 3-1 ACS 501 Space Requirements

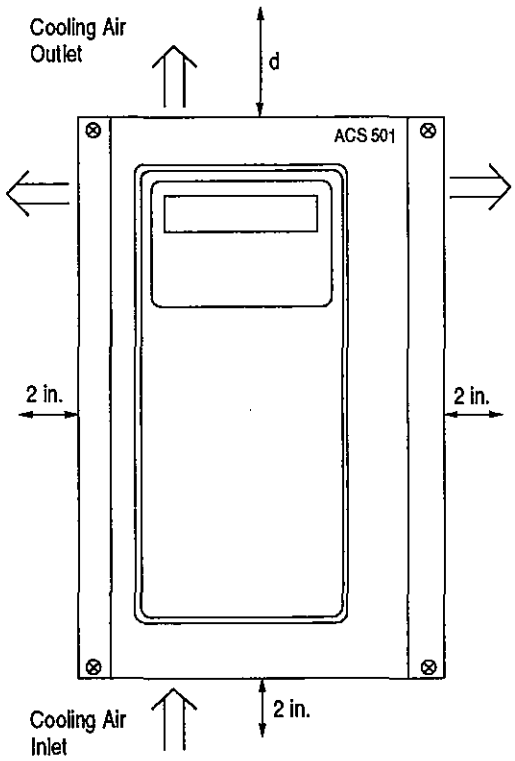

Unit	d	
	in.	mm
R2 & R3	6	150
R4, R5 & R5.5	10	250

Figure 3-2 shows the ACS 501 with dimensions coded by letters. Table 3-3 lists the actual dimensions for each ACS 501 unit. The table shows dimensions in inches and mm.

Figure 3-2 ACS 501 Dimensions

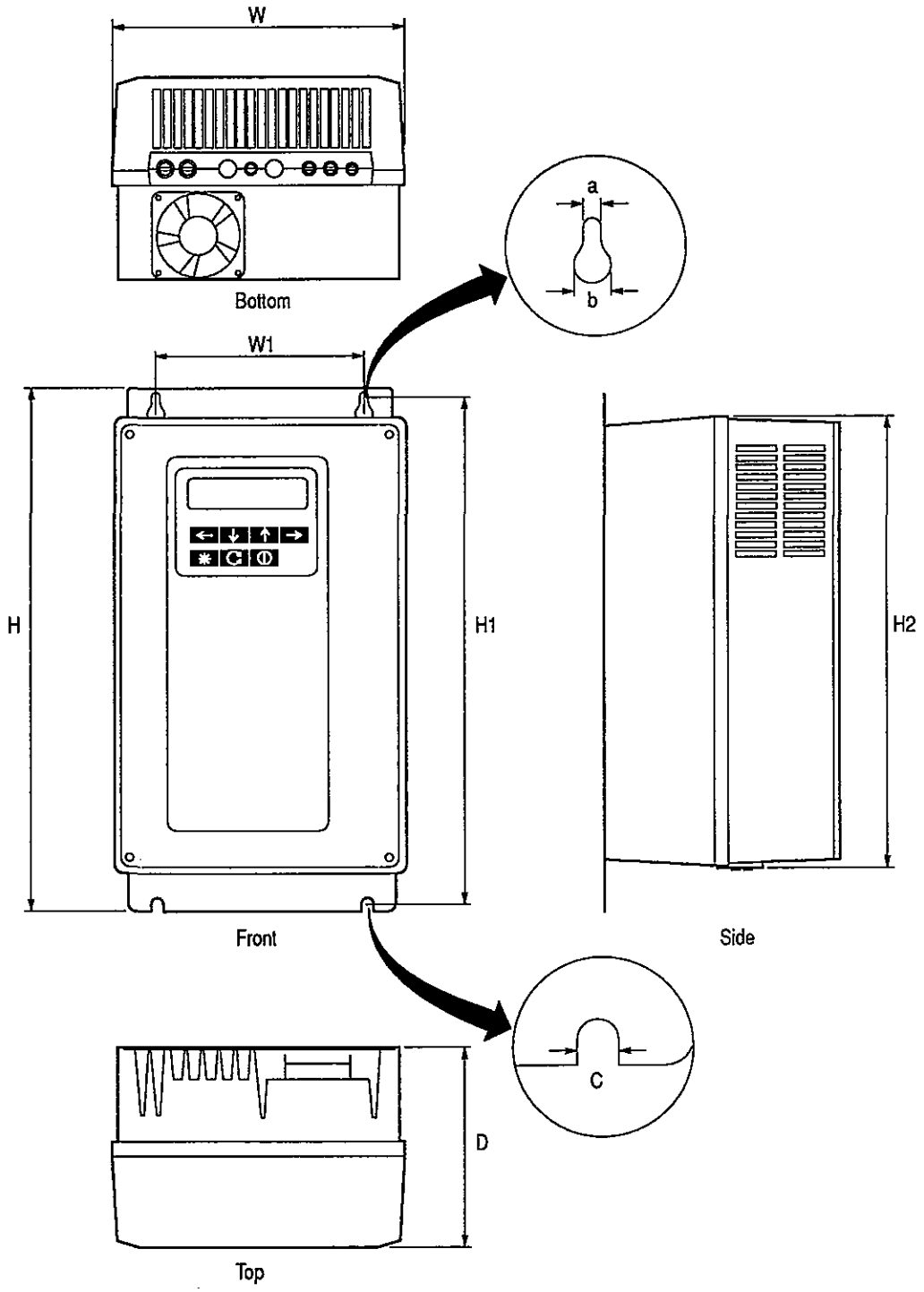

Table 3-3 Dimensions of ACS 501 Units

Dimensions	R2		R3		R4		R5		R5.5	
	inches	mm	inches	mm	inches	mm	inches	mm	inches	mm
W	7-7/8	200	9-55/64	250	11-13/16	300	13-13/16	351	13-13/16	351
W1	5-29/32	150	6-57/64	175	8-55/64	225	10-27/32	275	10-27/32	275
H	14-17/64	362	16-3/4	425	19-31/32	507	23-3/4	603	23-3/4	603
H1	13-25/32	350	15-3/4	400	18-29/32	480	22-41/64	575	22-41/64	575
H2	12-9/32	312	14-31/32	380	18-7/64	460	21-45/64	551	21-45/64	551
D	7-25/64	188	8-3/16	208	9-13/16	249	10-5/16	262	12-1/16	307
a	15/64	7	5/16	9	5/16	9	5/16	9	5/16	9
b	35/64	14	45/64	18	45/64	18	45/64	18	45/64	18
c	15/64	7	5/16	9	5/16	9	5/16	9	5/16	9
Unit Weight	17 lbs	8 kg	31 lbs	14 kg	54 lbs	25 kg	74 lbs	34 kg	88 lbs	40 kg
Shipping Weight	20 lbs	9 kg	34 lbs	15 kg	60 lbs	27 kg	80 lbs	36 kg	96 lbs	44 kg

Installation Site Power

The ACS 501 is designed for use on a three-phase system. Four wires (three phase plus a ground wire) are required for the input wiring. Input and output conductors, and branch circuit protection must be sized to local codes.

At least three (3) separate conduits are required; one each for input power, output power, and control wiring.

Conduit Size

Figure 3-3 shows a bottom view of R2 and R3 ACS 501 drives, and conduit sizes to fit wire-entry holes.

Figure 3-3 ACS 501 R2 and R3 Conduit Sizes

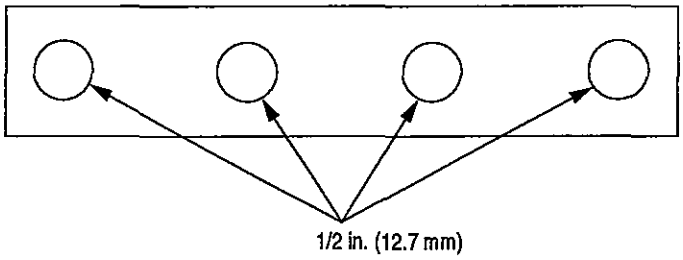

Figure 3-4 shows a bottom view of an ACS 501 R4 drive, and conduit sizes to fit wire-entry holes.

Figure 3-4 ACS 501 R4 Conduit Sizes

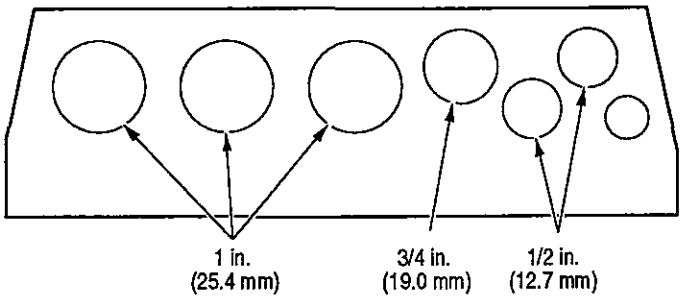

Figure 3-5 shows a bottom view of an ACS 501 R5 drive, and conduit sizes to fit wire-entry holes.

Figure 3-5 ACS 501 R5 & R5.5 Conduit Sizes

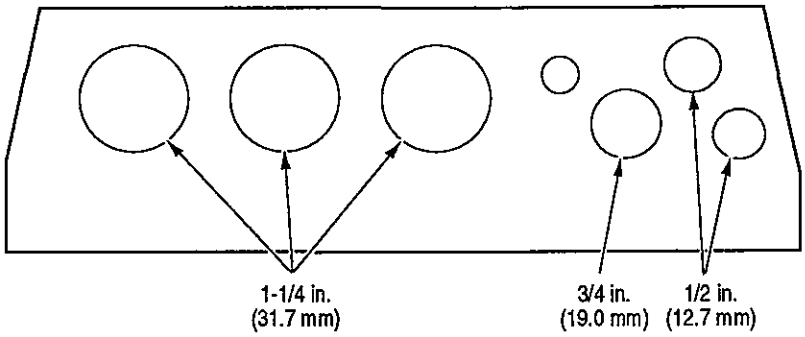

Power Wiring

All field wiring shall be rated for 140°F (60°C) and torqued to the values in Table 3-4.

Table 3-4 Wire Torque Values

Unit	in.-lbs	Nm
R2 & R3	8.8	1
R4, R5 & R5.5	17.6	2

Table 3-5 indicates the minimum and maximum wire sizes allowable for each size unit.

Table 3-5 Wire Sizes for ACS 501 Units

Drive Type	Unit	Drive Fuse Size	Wire Sizes
ACS501-002-4 – 005-4 ACS501-001-2 – 002-2	R2	16	22 AWG – 10 AWG
ACS501-007-4 – 010-4 ACS501-003-2 – 005-2	R3	30	20 AWG – 8 AWG
ACS501-015-4 ACS501-007-2	R4	50	12 AWG – 8 AWG
ACS501-020-4 ACS501-010-2	R4	50	10 AWG – 6 AWG
ACS501-025-4	R5	80	10 AWG – 6 AWG
ACS501-030-4 ACS501-015-2	R5	80	8 AWG – 0 AWG
ACS501-040-4 ACS501-020-2	R5	100	8 AWG – 0 AWG
ACS501-050-4 – 060-4	R5.5	160	8 AWG – 0 AWG

Table 3-6 lists the specifications for the factory installed, UL Recognized fuses (JFHR2).

Table 3-6 Fuse Specifications

Drive Type	Unit	Rating	Mfg.	Type
ACS501-002-4 – 005-4 ACS501-001-2 – 002-2	R2	16A/500V	Ferraz	500V FA 6.3 x 32/16
ACS501-007-4 – 010-4 ACS501-003-2 – 005-2	R3	30A/600V	Ferraz	6,600 CP URL 10.3 x 38/30
ACS501-015-4 – 020-4 ACS501-007-2 – 010-2	R4	50A/600V	Ferraz	6,600 CP URC 14 x 51/50
ACS501-025-4 – 030-4 ACS501-015-2	R5	80A/600V	Ferraz	6,600 CP URD 22 x 58/80
ACS501-040-4 ACS501-020-2	R5	100A/600V	Ferraz	6,600 CP URD 22 x 58/100
ACS501-050-4 – 060-4	R5.5	160A/600V	Bussmann	170M1369

Output Power Wiring

Install the motor wiring away from other wire routes. Avoid long parallel runs with other wires. If motor wires must run parallel to the control wires for a short length, the length must not exceed those outlined in Table 3-7. These maximum lengths also apply to control wires from other systems. Table 3-7 shows the maximum lengths for running control wires parallel to motor wires.

Table 3-7 Maximum Lengths For Parallel Wiring

Distance Between Wires		Maximum Run Length	
ft	m	ft	m
0	0	≤3.28	≤1
.328	0.1	≤32.8	≤10
3.28	1	≤328.0	≤100

The rapid rate of voltage changes causes capacitive coupling between motor wiring and the grounded metallic conduit. This capacitive coupling increases with switching frequency and motor wire length. This phenomenon can cause substantially higher measured current (by the drive) than is actually seen by the motor. This may result in:

- Nuisance overcurrent trips.
- Erroneous current display readings. The current display will read higher than measured current.
- Nuisance activation of current limits or electronic motor overload function (I^2t).

If the motor wire lengths in Table 3-8 must be exceeded, chokes should be installed in the drive output. Contact ABB for more information.

Table 3-8 Maximum Recommended Motor Wire Lengths

Switching Frequency, kHz	Maximum Cable Length	
	Feet	Meters
1	200	61
3	175	53.3
12	100	30.5

Control Wiring

Control wires for ACS 501 should be 16 – 22 AWG shielded, multi-core cables, Belden type 8761 or 8771 or equivalent, rated for 140°F (60°C).

Torque control wiring to 4 in.-lbs (0.5 Nm).

When planning control wiring from ACS 501 and external control devices consider the following:

1. All external control wiring to X50 must be done with shielded cable and must not be run in the same conduit or raceway with any high power wiring. The shield connection must be terminated at the chassis ground lug provided. The other end of the shield should be cut and taped back at the signal source.
2. X50 terminals 2 and 8 are "GND 2" (circuit common). X50 terminals 4, 6, 18, and 20 are also connected to circuit common.
3. These terminals are optically isolated from power and isolated from chassis ground by a 10 megohm resistor. They are not isolated from one another.
4. Refer to the *Control Connections* section description of X50 in this chapter for an outline of control signal requirements when selecting an Application macro.

Initial Inspection Procedure

Check that the drive does not show any signs of damage and that the delivery is complete. In the event of damage, please contact the shipping company or the supplier. If the delivery is not in compliance with the order, contact the supplier immediately.

Note: Do not destroy the packing material. The template printed on the protective cardboard can be used for mounting the ACS 501 on the wall.

If the device is stored before start-up, check that the environmental conditions in the storage room are acceptable:

- Temperature -40°F – +158°F (-40°C – +70°C),
- Relative humidity is less than 95 percent, and
- No condensation.

The warranty covers defects in manufacture. The manufacturer carries no responsibility for damage which occurs during transport or unpacking.

Your local ABB Drives company or distributor may have a different warranty period, which is specified in their sales terms and conditions and warranty terms.

If any questions arise concerning the ACS 501, please contact your Distributor or Local ABB Drives Office.

Mechanical Installation

The ACS 501 is mounted on a wall in a vertical position using four mounting notches at the top and bottom of the unit. When choosing the mounting location pay attention to the environmental needs of the ACS 501.

Note: Do not handle or lift the drive using the front cover. Use the bottom for lifting or handling.

To ensure safe installation, check that the surface of the mounting location is flat. Mark the mounting points of the ACS 501 on the wall using the template printed on the protective cardboard package as a guide. The maximum size of the mounting screws is 1/4 in. (6 mm) for 002 – 005 R2 units and 5/16 in. (8 mm) for 007 – 040 R3, R4, and R5 units.

Attach the screws to the marked positions.

Attach the unit at the mounting notches and tighten the screws.

Power Connections

Input Wiring

The ACS 501 is designed for use on a three-phase system. Four wires (three phase plus a ground wire) are required for the input wiring. When sizing wire, always conform to local regulations.

WARNING:

- Do not connect or disconnect input or output power wiring, or control wires, when power is applied.
- Never connect line voltage to drive output Terminals U_2, V_2, and W_2.
- Do not make any voltage tolerance tests (Hi Pot or Meggar) on any part of the unit. Disconnect motor wires before taking any measurements in the motor or motor wires.
- Make sure that power factor correction capacitors are not connected between the drive and the motor.

Output Wiring

Sizing is the same as for the input wiring.

Dynamic Breaking

When Dynamic Braking is required, connection is made to the DC bus terminals. Dynamic Braking can be accomplished in two ways.

1. Internal Dynamic Brake Chopper. If the ACS 501 was provided from the factory with dynamic braking, the control logic and power switch for the dynamic braking are built into the drive. The DC bus voltage is present at the DC bus terminals only when the DC bus voltage exceeds the braking threshold due to regeneration.
   To determine if the internal dynamic braking chopper has been supplied, first check the part number as described in Chapter 2. If the internal dynamic braking chopper is supplied, an external resistor load bank is connected to the DC bus terminals.

WARNING! Before connecting a resistor load bank to the DC bus terminals, measure the voltage at the terminals with power applied to the ACS 501. Use a meter rated greater than 1000 VDC. The voltage should be zero volts. If the voltage is 1.35 x V_{IN}, the internal braking chopper is not present, DO NOT CONNECT LOAD BANK RESISTORS.

Before connecting the brake resistor, make sure that the resistor value is equal to or greater than the value indicated in Table 3-9 or Table 3-10.

Table 3-9 Resistor Values For 480 V

hp	Minimum Brake Resistor Value (Ω)	Peak Power (w)
2	51.5	8892
3	42.6	10756
5	31.95	14341
7.5	24.2	18931
10	17.7	25814
15	13.35	34419
20	10.3	44458
25	8.4	54497
30	6.8	67404
40	5.5	83180
50	4.9	93219
60	3.8	120468

Table 3-10 Resistor Values For 230 V

hp	Minimum Brake Resistor Value (Ω)	Peak Power (w)
1	25.8	4446
2	16.0	7171
3	12.1	9465
5	8.9	12907
7.5	6.7	17210
10	5.2	22229
15	3.4	33702
20	2.8	41590

2. External Dynamic Braking Device. If the internal dynamic brake chopper was not supplied and dynamic braking is required for the application, an external dynamic braking chopper and resistor load bank can be connected to the DC bus terminals.

WARNING! The brake control terminals carry a dangerous DC voltage (1.35 x V_{IN}). No device other than an ABB Drives dynamic braking device may be connected to the positive and negative terminals of Terminal Block X2.

Insulation Checks

WARNING! Do an insulation check of the motor wiring and the motor before connecting the ACS 501 to line power. Before proceeding with the insulation resistance measurements, check that the ACS 501 is disconnected from incoming line power. Failure to disconnect line power could result in death or serious injury.

---

1. Check that the motor wires are disconnected from the ACS 501 output on Terminals U_2, V_2 and W_2.
2. Check that the motor wires are disconnected from the motor and remove bridging connections at the motor.
3. Measure the insulation resistances of the motor. The voltage range of the insulation resistance meter must be at least equal to the line voltage, but not exceeding 1000 V. The insulation resistance must be greater than 1 megohm.
4. Measure the insulation resistance of the motor wiring between the phases and between each phase and ground. The insulation resistance must be greater than 1 megohm.

Terminal Connections

To connect the power, motor, and control wires remove the front cover of the unit by removing the four screws at the corners.

The line input, brake, and motor power output wiring connections are shown in Figure 3-6.

Figure 3-6 Wiring Connections

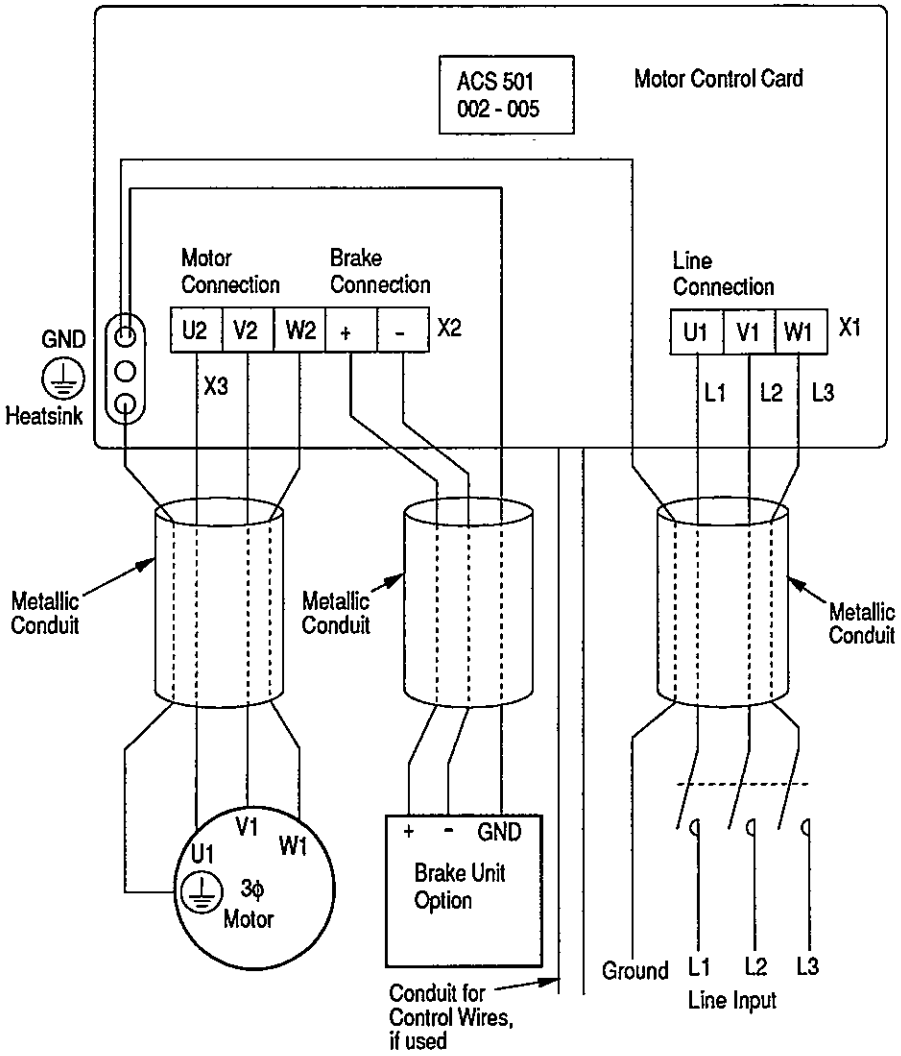

Control Connections

Available Control Locations

The available control locations for the ACS 501 are the:

- ACS Keypad located on the front of the drive.
- X50 screw terminals on the Control Interface Card SNAT-759.

Figure 3-7 shows the control interface card SNAT-759 with terminal and control locations.

Figure 3-7 Control Interface Board Connections

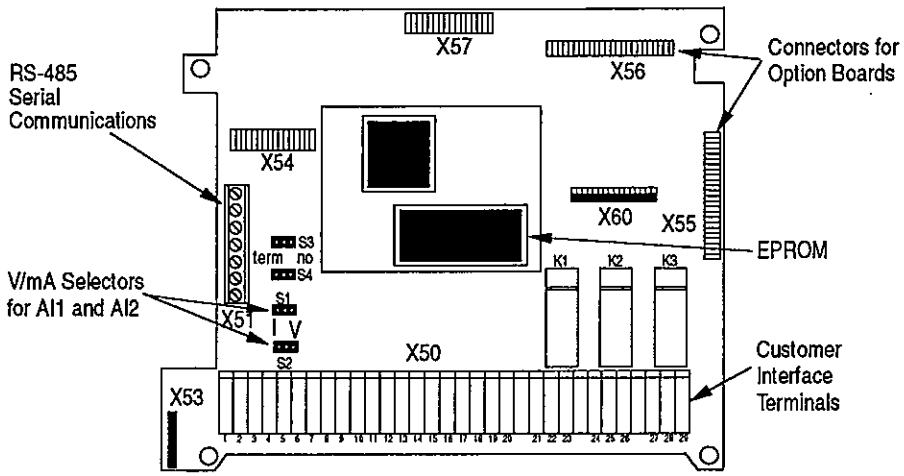

External control devices, for example a PLC or remote operator devices, are connected to Terminal Block X50 according to the connection diagram of each Application macro or according to the programming of the parameters in Main 10, Control Connections. The connection diagrams of Application macros are presented in the *ACS 500 Adjustable Frequency AC Drives 2 to 350 HP Programming Manual Including Application Macros*. The X50 connection diagram based on factory settings is presented in Figure 3-7 (Control Interface Card SNAT-759 connections). The terminal functions can be altered by means of parameter settings.

X50 Terminal Block X50 can accept wire sizes from 16 – 22 AWG. All connections to terminals X50:1 to X50:20 should be made with shielded cables.

X50:2, 4, 6, 8, 18, and 20 are circuit common. They are optically isolated from the power line potential and from chassis ground by a 10 megohm resistor. The common points are not isolated from each other.

Note: The ACS 501 is shipped with a wire from X50:8 to chassis ground, or with a jumper labeled S9 next to X50. This connects the circuit common to chassis ground. To isolate the circuit common from ground, remove this connection.

Potentiometer A manual speed potentiometer is connected to the reference at X50:1 (+ 10 VDC) and X50:2 (common) and to one of the analog inputs.

Analog Inputs There are two analog inputs. AI1 is on terminals X50:3 and X50:4. AI2 is on X50:5 and X50:6.

The analog inputs can accept a voltage signal (0 – 10 VDC) or a current signal (0 – 20 mA), as selected by jumpers S1 and S2 (S1 for AI1 and S2 for AI2).

The jumper is placed in the left position for voltage and the right position for current. Figure 3-8 shows jumper positions.

Figure 3-8 Jumper Positions

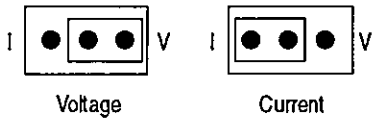

Auxiliary 24 VDC An auxiliary +24 VDC supply is available on terminals X50:7 and X50:8. This supply can drive auxiliary devices whose total current draw is less than 200 mA.

Digital Inputs There are six digital inputs, DI1 through DI6 on terminals X50:11 through X50:16 respectively. The digital inputs use 24 VDC logic from terminal X50:10 and are active high.

Analog Outputs There are two analog output signals. AO1 is on terminals X50:17 and X50:18. AO2 is on X50:19 and X50:20. These signals are 0 – 20 mA (or 4 – 20 mA) and can operate into a maximum 500 ohm load.

Digital (Relay) Outputs

There are three relay outputs which are each Form C. Relay RO1 is on terminals X50:21, X50:22, and X50:23; Relay RO2 is on terminals X50:24, X50:25, and X50:26; Relay RO3 is on terminals X50:27, X50:28, and X50:29.

The first terminal for each relay is the normally closed terminal (NC), the second is the common, and the third is the normally open (NO).

Maximum Switching Voltage: 300 VDC / 250 VAC

Maximum Switching Current/Power: 8 A @ 24 VDC, 0.4 A @ 250 VDC, or 2000 VA @ 250 VAC

Maximum Continuous Current: 2 A rms

Control Interface Card SNAT-759 Connections

Figure 3-9 shows Control Interface connections for factory-set parameter values.

Figure 3-9 SNAT-759 Connections and Parameter Values

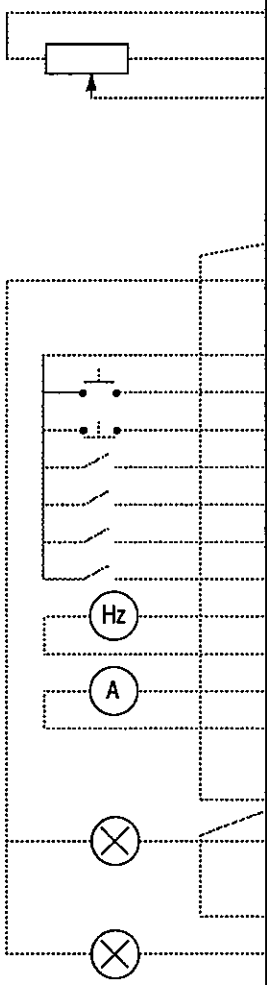

Terminal Block X50		Function
1	REF	Reference voltage 10V DC, max. 10mA
2	GND 2	potentiometer 1kΩ ≤ R ≤ 10kΩ
3	AI 1+	Reference signal, 10 Bit Resolution
4	AI 1-	0 -10 V or 0 - 20 mA, R_i = 200 kΩ, R_i = 250Ω
5	AI 2+	(Not specified in this application)
6	AI 2-	12 Bit Resolution
7	SPL	Auxiliary voltage output 24 V DC
8	GND 2	max. 200 mA
9	N.C.	Not connected
10	SPL	+24 V max. 10 mA
11	DI 1	Start
12	DI 2	Stop
13	DI 3	Reverse
14	DI 4	Acc./Dec 2
15	DI 5	Preset Speed Select
16	DI 6	Preset Speed Select
17	AO 1+	Output frequency
18	AO 1-	0 - 20 mA corresponds to 0... 60 Hz
19	AO 2+	Motor current
20	AO 2-	0 - 20 mA corresponds to 0...I_{MAX}
21	RO 11	Relay output 1
22	RO 12	Ready indication
23	RO 13	
24	RO 21	Relay output 2
25	RO 22	Run indication
26	RO 23	
27	RO 31	Relay output 3
28	RO 32	Fault (Inv) -indication
29	RO 33	

This page intentionally left blank.

Chapter 4 – Start-up Procedure

This chapter explains how to inspect the installation and how to start-up the ACS 501. Prerequisite information required for start-up was provided in *Chapter 2 – Overview of the ACS 501.*

Safety Precautions

Before start-up, observe the following:

The Motor Control Card (bottom card) is at DC bus potential (1.35 x V_{IN}) when the ACS 501 is connected to supply voltage. This voltage is extremely dangerous and can cause death or serious injury.

When the supply voltage is disconnected from the input terminal block X1, it will take about five minutes before the DC bus capacitors are discharged to a safe voltage.

To ensure that the voltage level is safe, measure the voltage between positive (+) and negative (-) on Terminal Block X2, labeled "Brake." Meter must be rated for 1000 VDC.

Note: If the internal brake option is installed, measure between the input terminal block X1 and positive (+) on Terminal Block X2. Meter must be rated for 1000 VDC.

The Control Interface Card and Option Cards are isolated from the main circuit, but dangerous voltages may be present at relay contact terminals. Always check for high voltage at Terminals X50:21 – 29 before working on the Control Interface or Option Cards.

WARNING! When the ACS 501 is connected to the line power, the Motor Terminals U_2, V_2, and W_2 are live even if the motor is not running. Do not make any connections when the ACS 501 is connected to the line. Disconnect and lock out power to the drive before servicing the drive. Failure to disconnect power may cause death or serious injury.

Figure 4-1 shows the start-up checklist.

Figure 4-1 Start-up Checklist

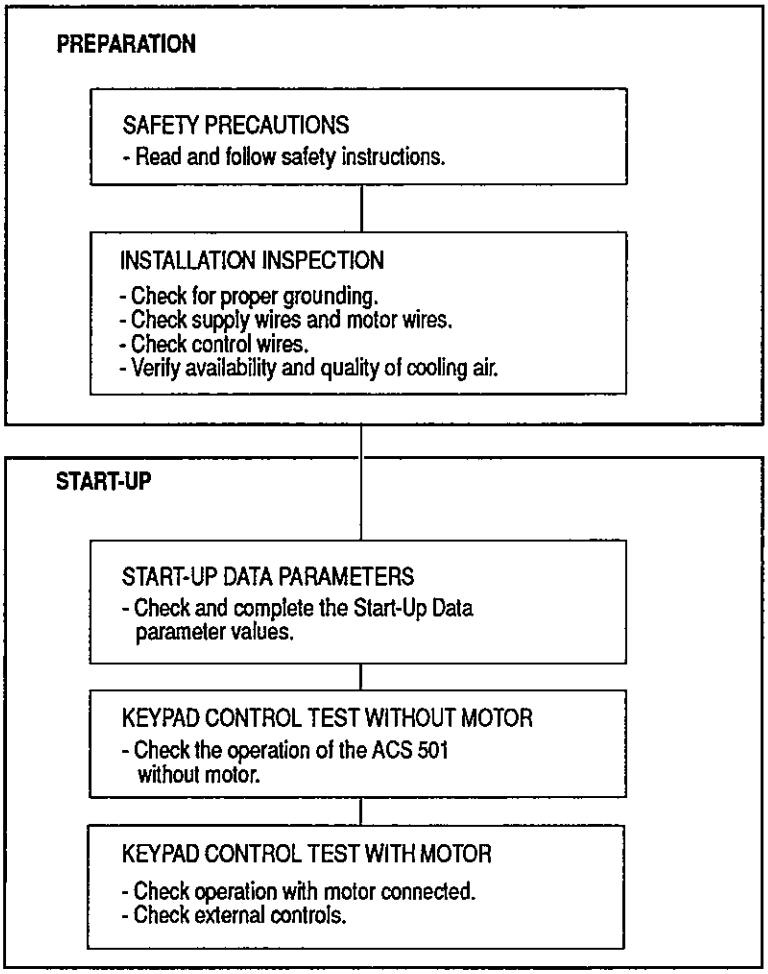

Installation Inspection

Inspect the mechanical and electrical installation of the ACS 501 for compliance with the prevailing electrical installation regulations and codes.

Note: Do not connect the motor wires before proceeding with the Keypad Control Test, Motor Disconnected. Refer to Keypad Control Tests in this chapter.

After installation, inspect the following:

- Grounding of the ACS 501 and the motor.
- Supply and motor wires (selection of the wire size, connections).
- Control cables (connections, wire shields grounding, location as far as possible from the power wires).
- Quantity and quality of cooling air for the ACS 501.
- Verify that it is safe to run the motor.
- Connect the ACS 501 to supply voltage. Check that the voltage between $L_1 - L_2$, $L_2 - L_3$, and $L_1 - L_3$ ($U_1 - V_1$, $U_1 - W_1$, and $V_1 - W_1$) is $V_N \pm 10\%$.

Start-up Data Parameters

Power up the ACS 501. The display shows Operating Data Parameter 1 (Output Frequency). Before proceeding with the start-up, check and complete the Start-up Data Parameter values. Do not change parameters at this time except as described in the following steps.

While viewing Parameter 1 (Output Frequency) press and hold [*], then press [Right Arrow]. The display shows Parameter A (Language) in Setting mode.

A LANGUAGE

Press [Up Arrow] or [Down Arrow] to select your preferred language. The ACS 501 displays all information in the language you select. Press [*] to confirm the selection and move to the next parameter. The available languages are: English, German, Italian, Spanish, Dutch, French, Danish, Finnish, and Swedish.

B APPLICATIONS

Leave this in the FACTORY setting to perform the start-up procedure. If anything other than FACTORY displays, press [Up Arrow] or [Down Arrow] to change the parameter to FACTORY. Press [*] to confirm the selection and move to the next parameter.

C APPLIC. RESTORE

This parameter restores all parameters of the current application to factory-set parameter values. Set this to YES by pressing [Up Arrow]. Press [*] to confirm the selection and move to the next parameter.

D SUPPLY VOLTAGE

This parameter offers choices of 440, 460, *480*, and 500 VAC for 480-volt units; *380*, 400, and 415 VAC for 380-volt units; or 208, 220, *230*, and 240 VAC for 230-volt units.

Press [Up Arrow] or [Down Arrow] to select the voltage value which matches the line voltage providing power to your ACS 501. Press [*] to confirm the selection and move to the next parameter.

E USER DISPLAY SCALE

This parameter is used to set the scaling factor for Operating Data Parameter 2 (Speed). When set to 0, the speed display will show RPM. When set to 100, the speed display will show %. When set to any other value from 0 – 10000, the display will show this value (minus slip unless slip compensation is ON) when the output frequency is at the frequency set by Start-up Data Parameter I (Motor Base Frequency).

Press [Up Arrow] or [Down Arrow] to set the desired value of the speed display. Press [*] to confirm the selection and move to the next parameter.

F MOTOR CURRENT -FLA

This parameter matches the ACS 501 to the rated motor current, adjustable between 0 and 1000 amps. The drive uses this parameter for motor overload protection and current (amperage) information displays.

Press [Up Arrow] or [Down Arrow] to select the current (amperage) value for your motor. Press [*] to confirm the selection and move to the next parameter.

G MOTOR POWER

This parameter matches the motor rated power, adjustable between 0.7 hp and 1340 hp. The drive uses this parameter for motor overload and kWh information displays. The left key switches the display between hp and kWh. To change the display, press and hold the left key for two seconds.

Press [Up Arrow] or [Down Arrow] to select the motor power value for your motor. Press [*] to confirm the selection and move to the next parameter.

H MOTOR POWER FACTOR

This parameter matches the motor power factor (at rated speed and load on sinusoidal power), adjustable between 0.10 and 1.0. The drive uses this parameter for motor torque and power information displays.

Press [Up Arrow] or [Down Arrow] to select the motor power factor value for your motor. Press [*] to confirm the selection and move to the next parameter.

I MOTOR BASE FREQUENCY

This parameter is used to set the designed frequency of the motor, adjustable from 30 Hz to 500 Hz in 10 Hz increments. Changing this value will automatically set the FWP to the same value.

Press [Up Arrow] or [Down Arrow] to select the base frequency value for your motor. Press [*] to confirm the selection and move to the next parameter.

J MOTOR BASE R.P.M.

This parameter is used to set the nameplate speed of the motor and is adjustable from 200 to the maximum 2 pole motor speed based on Start-up Data Parameter I (Motor Base Frequency).

Press [Up Arrow] or [Down Arrow] to set the motor nameplate speed value for your motor. Press [*] to confirm the selection and move to the next parameter.

K MOTOR NOM. VOLTAGE

The default is 460 V for 480-volt units, 380 V for 380-volt units, and 230 V for 230-volt units. Changing this parameter automatically changes the Maximum Output Voltage.

Press [Up Arrow] or [Down Arrow] to select the motor rated voltage for your motor. Press [*] to confirm the selection and return to Operating Data Parameter 1 (Output Frequency).

Note: *If the motor rated voltage is lower than the supply voltage, make sure that the motor insulation is rated for the DC bus voltage level which is* $V_{IN} \times 110\% \times 1.35 \times 1.3$ *minimum (input voltage* $\times \pm 10\%$ *tolerance* $\times$ *peak of rectified wave* $\times$ *overvoltage limit).*

Keypad Control Tests

Motor Disconnected from the ACS 501

After setting the Start-up Data parameters, test the drive as follows:

1. Disconnect and lock out power from the ACS 501, wait at least five minutes after disconnecting power. Verify that the DC Bus voltage is at a safe level by measuring the voltage between positive (+) and negative (-) on Terminal Block X2, labeled "Brake." Check for zero volts at Terminals X50:21 – 29 before continuing.

Note: If the internal brake option is installed, measure between the input terminal block X1 and positive (+) on terminal block X2. Meter must be rated for 1000 VDC.

2. Disconnect the motor from the ACS 501.
3. Power up the ACS 501.
4. Press [Start/Stop] to issue a start command. The Run Status indicator on the LCD Display displays the symbol "I".
5. Press [*] to enter setting mode. Press [Up Arrow] until frequency display shows 60 Hz, then press [*] to enter value.
6. Press [Up Arrow] or [Down Arrow] to scroll through and check the Operating Data parameters. Check that Operating Data Parameter 7 (Output Voltage) is equal to the input voltage.

If the drive operates according to these steps, disconnect and lock out power to the ACS 501 to prepare for the next test.

WARNING! Wait at least five minutes after disconnecting power from the drive before you attempt to service the drive. Bus capacitors in the intermediate DC circuit must discharge before servicing the drive. Check for zero volts at Terminals X50:21 – 29 and X2:(+) and (-), or between the input Terminal Block X1 and Terminal Block X2:(+) if an internal brake option is installed. Meter must be rated for 1000 VDC. Failure to check voltages may result in death or serious injury.

If the drive does not operate according to these steps, refer to *Chapter 5 – Fault Tracing*.

Motor Connected to the ACS 501

After successfully testing the drive with the motor disconnected, continue testing the drive as follows:

1. Disconnect and lock out power from the ACS 501. Check for zero volts at Terminals X50:21 – 29 and X2:(+) and (-) before continuing.
2. Connect the motor to the ACS 501.
3. Power up the ACS 501.
4. Set Operating Data Parameter 10 (Keypad Ref 1) to 0.5 Hz.
5. Press [Start/Stop] to issue a start command. The Run Status indicator on the LCD Display displays the symbol "I".
6. Check the monitored values of Operating Data Parameters 1 – 8 for normal drive and motor operation.
7. Return to Operating Data Parameter 1 (Output Frequency).

CAUTION: Check motor rotation direction as soon as the motor begins to move. If motor rotation direction is critical and the motor does not run in the direction indicated by the Rotation Direction indicator on the ACS 501 LCD Display, shut down the drive, disconnect and lock out power to the drive, wait five minutes, and check for zero volts at Terminals X50:21 – 29 and X2:(+) and (-). When the drive has reached zero volts, swap any two motor output wires at Terminals U_2, V_2, and W_2. Incorrect motor rotation direction may cause equipment damage.

---

8. Slowly increase the frequency value of Parameter 1. Verify that motor speed varies as frequency varies.
9. Increase the Parameter 1 frequency value to 60 Hz and return to Display mode.
10. Measure the output current in all three phases. The current should be balanced, and should not exceed the motor or drive rating.

If the drive operates according to these steps, your ACS 501 is ready to use with pre-set or modified macro adjustments.

If the drive does not operate according to these steps, refer to *Chapter 5 – Fault Tracing*. Repeat the above steps until the drive operates normally.

Default Drive Parameters

Now that you have tested and started the drive using the Factory macro settings, check the Factory macro default drive parameters. Refer to the *ACS 500 Adjustable Frequency AC Drives 2 to 350 HP Programming Manual Including Application Macros* for additional information about Factory macro default settings.

ACS 501 external control wiring schemes vary according to the macro you choose and the parameter values you change. If you plan to change the ACS 501 macros or parameter values, and if you plan to use an external control device, refer to the *ACS 500 Adjustable Frequency AC Drives 2 to 350 HP Programming Manual Including Application Macros* for information on control wiring, Application macros, and modifying macro parameters.

To complete the start-up, select the appropriate Application macro, and make any necessary parameter changes. Connect all external wiring based on the configuration selected, and test all external interfacing.

Customizing Application Macro Parameters

At some point during the installation of your ACS 501 you can select one of the pre-set application macros closely suited to your application. You select Application macros from Start-up Data Parameter B (Applications). You also may need to modify the macro to custom-fit your application. For example, if you select the Factory macro for your application, the Factory macro default for Start-up Data Parameter D (Supply Voltage) is 480 V. If your supply voltage is 460 V, you need to change this parameter in the macro accordingly.

To customize the macro for your application you must change certain parameter values. In each macro, certain parameters are more likely to be changed than other parameters, but the application determines which parameters, and in which macro, will require changing.

Note: If you plan to use an external control device for your drive, you must wire the control to the drive according to the wiring scheme of the macro you select. Refer to the ACS 500 Adjustable Frequency AC Drives 2 to 350 HP Programming Manual Including Application Macros *for more information on specific macro external control wiring schemes.*

Refer to the *ACS 500 Adjustable Frequency AC Drives 2 to 350 HP Programming Manual Including Application Macros* for more information on accessing and changing parameters.

Note: If you use RUN ENABLE *Digital Input from the screw terminals, the keypad's* START / STOP *function becomes disabled until a run enable signal is present.*

Note: The direction is fixed in FORWARD *by Parameter 10.1.3 (Loc/Ext Direction) in the factory default settings for safety purposes. If the application requires reversing, change Parameter 10.1.3 accordingly. If reversing is not required, the digital input programmed for Direction can be reprogrammed for another function.*

This page intentionally left blank.

Chapter 5 – Fault Tracing

This chapter describes the ACS 501 Warning and Fault indications and Fault history. It explains how to trace Warnings and Faults using a table of displayed messages, probable causes, and remedies. The last part of this chapter includes flowcharts for troubleshooting specific faults.

Some faults may require technical support. Contact ABB Technical Support at the following:

- (800) 243-4384
- (414) 785-8500
- Fax: (414) 785-0397

Fault Indications

The ACS 501 continuously monitors itself for faulty operation. If a fault condition should arise, the ACS 501 will display a description of the fault and wait for the operator to acknowledge the fault before resuming operation.

The ACS 501 will also display warning indications, which indicate abnormal operation, but do not cause the drive to stop. If a fault occurs when a warning display is on, the warning will be erased and the fault indication is displayed.

Figure 5-1 shows examples of warning and fault indications.

Figure 5-1 Warning and Fault Indications

```
**      WARNING      **
7 AI<MIN        R1[->I]
```

```
***     FAULT      ***
8 OVERCURR1     R1[->I]
```

Fault Resetting

A fault can be reset either by pressing the Keypad Start/Stop button, activating the digital input selected by Parameter 10.4.2 (Fault Reset Select), or via serial communication (RS 485), or if necessary, switching the input voltage off for a while. If the fault has been corrected, the ACS 501 will resume normal operation. If the fault has not been corrected, the ACS 501 will trip again. For automatic fault reset, refer to Automatic Reset Group 30.2 in *Chapter 5* of the *ACS 500 Adjustable Frequency AC Drives 2 to 350 HP Programming Manual Including Application Macros.*

***Note:** Fault resetting starts the drive, if start command is active.*

Some faults require you to cycle the power off and on once before the fault can be cleared. Proper fault reset action is given in Table 5-1.

Fault History

When a fault is detected, it is stored so that it can be reviewed at a later date. The last three faults and warnings are stored in Operating Data Parameters 17 (Last-Recd Fault), 18 (Second-Recd Fault), and 19 (First-Recd Fault).

The faults can be checked for trends that may be useful in preventing future faults. For example, if the last two out of three faults were overvoltage trips, the deceleration time should be longer.

Scrolling through the Fault History parameters does not erase the Fault History. The oldest fault or warning is automatically erased when a new fault or warning occurs.

Note: Undervoltage Fault and Supervision Limit Indications are not stored in Fault History. They remain on display until reset by pressing [Start/ Stop] or by external fault reset. The source of external fault reset can be set at Parameter 10.4.2 (Fault Reset Select).

Fault Erasing

You can erase fault messages from the ACS 501 memory. To erase fault messages:

1. Select Operating Data Parameter 17 (Last-Recd Fault).
2. Press [*] to enter Setting Mode.
3. Press [Up Arrow] or [Down Arrow] to erase the fault.
4. Press [*] to accept.
5. Repeat Steps 2 and 3 while viewing Operating Data Parameters 18 and 19.

Fault Tracing

Warning Messages

= Press once to reset warning.

Warning Message	Possible Cause	Remedy
1 OVER TEMP	The heat sink temperature is over 149°F (65°C). Restricted air flow caused by dust or improper installation location.	Refer to Figure 5-2 at the end of this chapter.
2 MOT STALL	Parameter 30.1.8 (Stall Func) is set to WARNING.	Refer to Fault 3 (Mot Stall) in the next section.
3 MOTOR TEMP	Parameter 30.1.3 (Mot Temp Flt Func) is set to WARNING.	Refer to Fault 4 (Mot Temp) in the next section.
6 UNDER LOAD	Parameter 30.1.10 (Underload Func) is set to WARNING.	Refer to Fault 7 (Under Load) in the next section.
7 AI < MIN	Parameter 30.1.2 (AI < Min Func) is set to WARNING.	Refer to Fault 11 (AI < Min) in the next section.
8 EEPROM WR	Parameter storing to the EEPROM has failed.	• Check DC bus voltage. • If voltage is OK, try to store again. • If warning occurs again, try to restore factory settings. • If the warning persists, contact ABB Technical Support.

Fault Messages

= press once to reset fault.

= remove power to reset fault.

Fault Message	Possible Cause	Remedy
1 START/STOP	The start/stop reference from Control Interface Card is different from the start/stop state of the Motor Control Card.	• Check the connection between Control Interface and Motor Control Cards. • If the fault persists, contact ABB Technical Support.
2 OVER TEMP	The heat sink temperature is greater than 158°F (70°C). Restricted air flow caused by dust or improper installation.	Refer to Figure 5-2 at the end of this chapter.
3 MOT STALL	The ACS 501 has determined that the motor is operating in the stall region. Refer to Parameter 30.1.10 (Stall Time/ Freq). The motor is not turning because of increased load torque. Motor may be too small for the application.	• Remove the mechanical problem causing increased load torque. • If the motor shaft is rotating and the motor is not overheating, increase stall limit parameters. • Check drive sizing, use larger ACS 501 and motor if necessary.
4 MOTOR TEMP	The ACS 501 determined that the motor is overheated. Because the temperature rise is calculated from the motor current and not measured directly, the motor may be within temperature rise specification, especially with long motor cables where capacitive currents will increase the current from the drive.	• Check the motor temperature. If it is within temperature rise specification, increase Parameter 30.1.5 (Motor Load Curve) and/or Parameter 30.1.4 (Motor Therm Time) and restart. • If the motor temperature is above rated temperature, improve motor cooling or resize the motor.
7 UNDER LOAD	The motor load has dropped below the Supervision Limit set by Parameters 30.1.12 and 30.1.13.	• Fix mechanical problem causing underload. • Check motor load cycle and increase Parameter 30.1.12 (Underload Time) or Parameter 30.1.13 (Underload Curve).

Fault Message	Possible Cause	Remedy
8 OVER CURR1	The output current has exceeded 265% I_N. This can be caused by a short circuit or ground fault in the motor, motor cable, or in the ACS 501. Too short acceleration time may also cause an overcurrent trip.	• The number after the notice tells what overcurrent protection circuit has tripped. Refer to Figure 5-3 at the end of this chapter.
9 OVER VOLT	DC bus voltage has exceeded 135% nominal voltage. Overvoltage is generally caused when the motor runs as a generator in drives where the load inertia is extremely high and the deceleration time is set low.	• Use longer deceleration time or • Use coasting stop function if it is compatible with the application. • If short deceleration time is needed, use Dynamic Braking Device.
10 UNDER V 1	DC bus voltage has gone below 65% of V_N. Most common reason for low voltage trip is failure in the supply voltage, loss of phase, or "brown out" condition.	• Check supply voltage. • If supply voltage was adequate, an internal failure has occurred. Contact ABB Technical Support.
11 AI < MIN	Analog input is less than the minimum as set by Parameters 10.5.1 and 10.5.5.	Input reference has failed or control wire is broken. Check the reference circuit.
16 PWR RNGE	Power range programming does not match after replacing the Control Interface or Motor Control Cards.	• Check the power range programming on Motor Control Card. • Remove power, wait one minute, then restore power. If the fault persists, contact ABB Technical Support.
19 IN COMMS	Failure in serial communication within the Control Interface and/or Motor Control Cards.	• Check the cabling between Control Interface and Motor Control Cards. • If the fault persists, contact ABB Technical support.
20 CON INT	This fault is related to components in the Control Interface Card.	• Remove power, wait one minute, then restore power. • If the problem persists, call ABB Technical Support. Record the specific fault code, you may be asked for it.

Fault Message	Possible Cause	Remedy
21 MOT CONT	This fault is related to components in the Motor Control Card.	• Remove power, wait one minute, then restore power. • If the problem persists, call ABB Technical Support. Record the specific fault code, you may be asked for it.
22 PAR REST	Parameter restoring error. Parameter checksum does not match.	• Reset fault display (the display is reset allowing the scrolling of parameters, but the fault is not reset). • Check all parameter settings or restore the factor settings. • Remove power, wait one minute, then restore power to check that the fault has disappeared.
23 UNDER V 2	DC bus voltage does not rise over 93% of V_N during five seconds after connecting the input power.	• Check supply voltage. • Call ABB Technical Support.
24 GND FAULT	Ground Fault has been detected in the motor or motor wiring.	• Check the motor and motor wiring for grounds faults.

Figure 5-2 ACS 501 Temperature Warning/Fault Flowchart

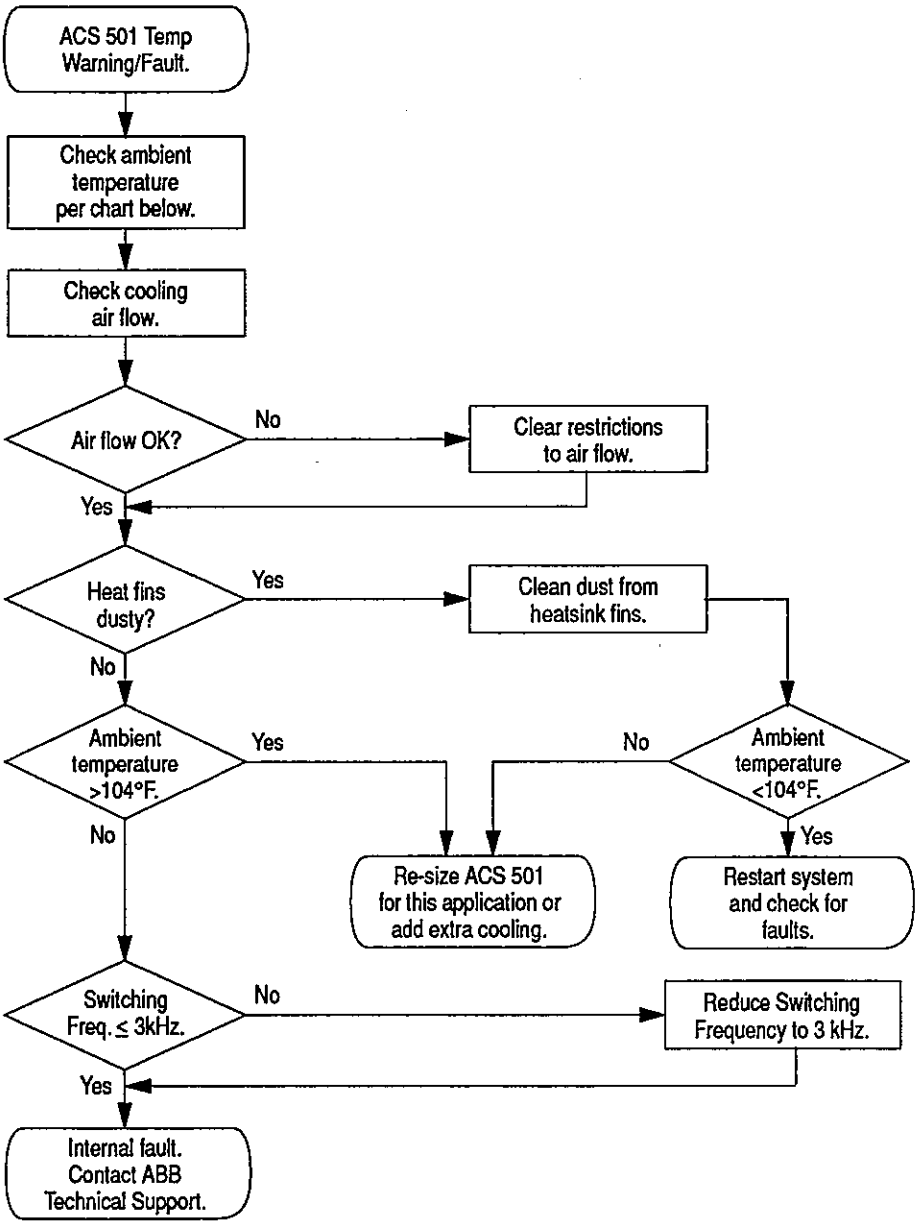

Table 5-1 Fault Message Table

Application Rating	Enclosure Type	
	NEMA 1	NEMA 12
Constant Torque	113°F (45°C)	104°F (40°C)
Variable Torque	104°F (40°C)	

Figure 5-3 Overcurrent Fault Flowchart

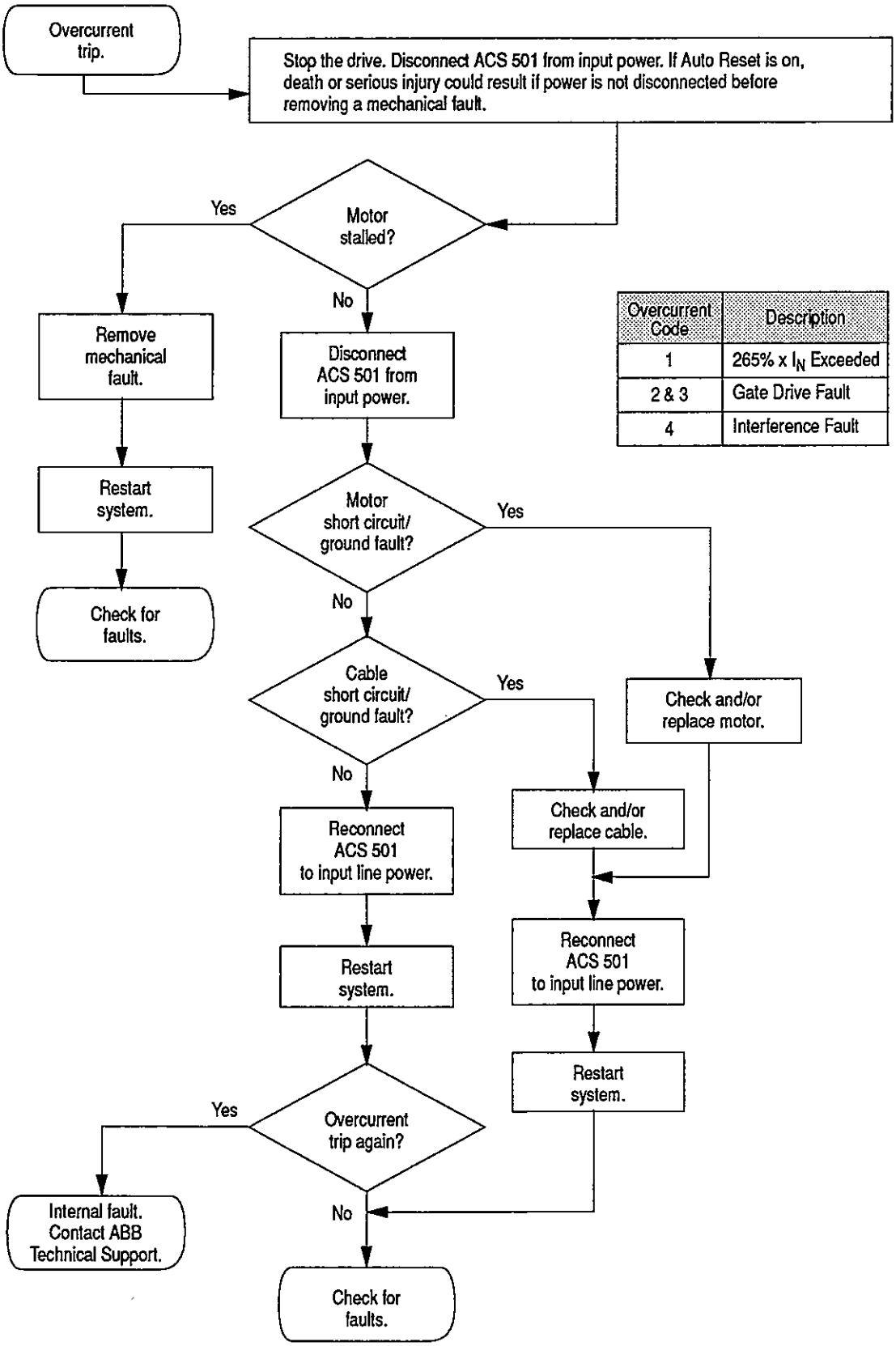

Overcurrent Code	Description
1	265% x I_N Exceeded
2 & 3	Gate Drive Fault
4	Interference Fault

Chapter 6 – Service and Maintenance

This chapter explains procedures for servicing ACS 501 components. It also includes spare parts information and general technical data.

CAUTION: Electrostatic Discharge (ESD) can damage electronic circuits. Do not handle any components without following the proper ESD precautions.

Electrostatic Discharge Precautions

Electrostatic Discharge generated by static electricity can damage the complimentary metallic oxide semiconductor devices on various drive boards. It is recommended that you perform these procedures to guard against this type of damage when circuit boards are removed or installed:

- Wear a wrist type grounding strap that is grounded to the chassis.
- Attach the wrist strap before removing the new circuit board or IGBT from the conductive packet.
- Remove components from the drive and immediately insert them into their conductive packets.

Rectifier Tests

The Rectifier Tests are divided into groups according to drive ratings. These tests tell you if the rectifier is the cause of drive malfunction. Use a multimeter to test your rectifier in one of two ways:

- With the diode function, if your meter has one, or
- With a resistance function.

Follow the steps in the Diode Test sections only if your multimeter has a diode test function. If your multimeter does not test diodes, refer to the Resistance Test sections.

ACS 501 – 002, 003, and 005

Diode Test

1. Disconnect and lock out power from the ACS 501.

WARNING! Wait at least five minutes after disconnecting power from the drive before you attempt to service the drive. Bus capacitors in the intermediate circuit must discharge before servicing the drive. Check for zero volts at Terminals X50:21 – 29 and X2:(+) and (-) or between the input terminal block X1 and Terminal Block X2:(+) if an internal brake option is installed. Failure to check voltage may result in death or serious injury.

---

2. Check for zero volts at Terminals X50:21 – 29 and X2:(+) and (-) or between the input terminal block X1 and Terminal Block X2:(+) if an internal brake option is installed.

CAUTION: Electrostatic Discharge (ESD) can damage electronic circuits. Do not handle any components without following the proper ESD precautions.

Note: When disconnecting wires from components and terminals, mark the wires to correspond to their component and terminal connections.

3. Remove all control wiring from the Control Interface Card.

Note: Terminal Block X50 disconnects from the Control Interface Card in three whole sections. To do this, lift the interlocking tabs along the top edge of the three X50 sections and carefully pry the sections straight outward from the Control Interface Card. Mark the sections to correspond with their order of assembly on the Control Interface Card.

4. Remove the screws fastening the left side of the Control Interface Card to the ACS 501 chassis, disconnect the cable from X4 on the Motor Control Card, and swing the Control Interface Card open to access the Motor Control Card.
5. Remove the choke wires from Terminals X6, X7, X8, and X9.
6. Set your multimeter to test diodes. If your multimeter does not have a diode test function, refer to the Resistance Test following this Diode Test.
7. Connect the multimeter negative test probe to Terminal X6 and measure all phase poles U_2, V_2, W_2, of Terminal X1. Meter readings should be approximately 0.5.
8. Change the multimeter test probe polarity. The meter should register infinity.

9. Measure between X6 and X8. The meter should register approximately 0.8 and infinity, accordingly.
10. If your readings differ from the values in Steps 7 – 9, replace the Rectifier Module.

Resistance Test

1. Follow Diode Test Steps 1 – 5, above.
2. Set your multimeter to test resistance. If your multimeter has a diode test function, disregard the Resistance Test and continue with Diode Test Steps 6 – 10 above.
3. Measure the rectifier as in Diode Test Steps 7 – 9 above. The meter should register a range from 100 to 10,000 ohms and infinity, accordingly.
4. Connect the multimeter positive test probe to Terminal X8 and measure each X1 phase pole with the multimeter negative test probe. The meter should register a range from 100 to 10,000 ohms and infinity, accordingly.
5. If your readings differ from these resistance values, replace the Rectifier Module.

ACS 501 – 007 to 040

Diode Test

1. Disconnect and lock out power from the ACS 501.

WARNING! Wait at least five minutes after disconnecting power from the drive before you attempt to service the drive. Bus capacitors in the intermediate circuit must discharge before servicing the drive. Check for zero volts at Terminals X50:21 – 29 and X2:(+) and (-) or between the input terminal block X1 and Terminal Block X2:(+) if an internal brake option is installed. Failure to check voltage may result in death or serious injury.

---

2. Check for zero volts at Terminals X50:21 – 29 and X2:(+) and (-) or between the input terminal block X1 and Terminal Block X2:(+) if an internal brake option is installed.

CAUTION: Electrostatic Discharge (ESD) can damage electronic circuits. Do not handle any components without following the proper ESD precautions.

Note: When disconnecting wires from components and terminals, mark the wires to correspond to their component and terminal connections.

3. Remove all control wiring from the Control Interface Card.

Note: Terminal Block X50 disconnects from the Control Interface Card in three whole sections. To do this, lift the interlocking tabs along the top edge of the three X50 sections and carefully pry the sections straight outward from the Control Interface Card. Mark the sections to correspond with their order of assembly on the Control Interface Card.

4. Remove the screws fastening the left side of the Control Interface Card to the ACS 501 chassis, disconnect the cable from X4 on the Motor Control Card, and swing the Control Interface Card open to access the Motor Control Card.
5. Remove all wires from the rectifier terminals.
6. Set your multimeter to test diodes. If your multimeter does not have a diode test function, refer to the Resistance Test following this Diode Test.
7. Connect the multimeter negative test probe to the rectifier positive terminal and measure each rectifier phase pole with the multimeter positive test probe. Meter readings should be approximately 0.5.

Figure 6-1 Positive Rectifier Test

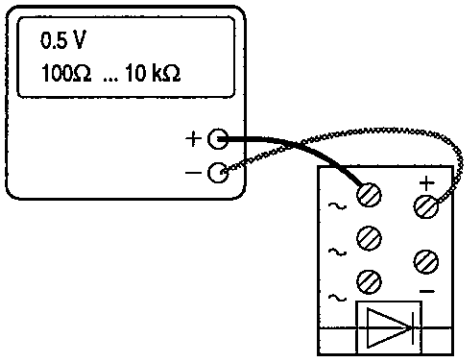

8. Connect the multimeter positive test probe to the rectifier positive terminal and measure each rectifier phase pole with the multimeter negative test probe. The meter should register infinity at each rectifier phase.

Figure 6-2 Negative Rectifier Test

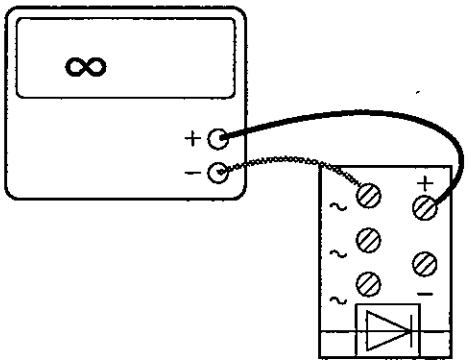

9. Measure between the positive and negative rectifier terminals. The meter should register infinity with the test probes positioned one way, and approximately 0.8 when the test probe positions are switched.
10. If your readings differ from the values in Steps 7 – 9, replace the Rectifier Module.

Resistance Test

1. Follow Diode Test Steps 1 – 5, above.
2. Set your multimeter to test resistance. If your multimeter has a diode test function, disregard the Resistance Test and continue with Diode Test Steps 6 – 10 above.
3. Measure the rectifier as in Diode Test Steps 7 – 10 above. The meter should register a range from 100 to 10,000 ohms and infinity, accordingly.
4. Connect the multimeter positive test probe to the rectifier negative terminal and measure each rectifier phase pole with the multimeter negative test probe. The meter should register a range from 100 to 10,000 ohms and infinity, accordingly.

Figure 6-3 Resistance Test

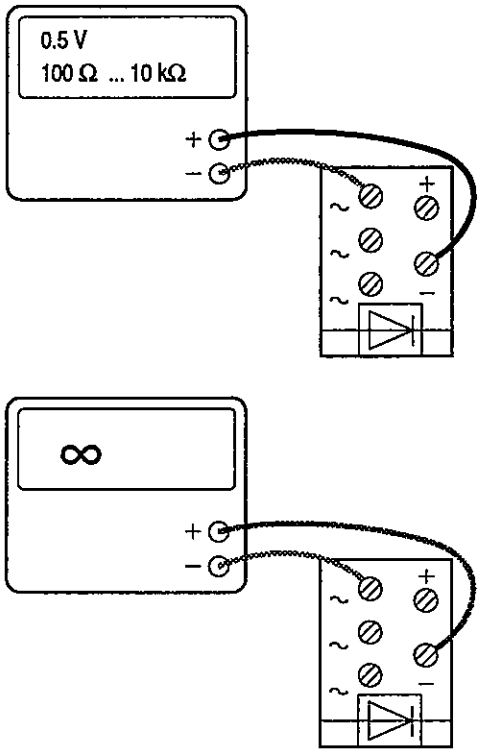

5. If your readings differ from these resistance values, replace the Rectifier Module.

DC Bus Capacitor Tests

The DC Bus Capacitor Tests are divided into groups according to drive ratings. Each drive rating group requires two separate tests, one for capacitor resistance, and one for capacitor DC insulation. These tests tells you if your DC bus capacitors need replacement.

Damaged electrolytic capacitors may withstand 300 V while not operating at normal power levels. A resistance test, together with a Meggar test for DC insulation, reveals enough information to determine the condition of electrolytic capacitors.

When testing DC bus capacitors, always do the Resistance Test and the Insulation Test.

ACS 501 – 002, 003, and 005

Resistance Test

The DC Bus Capacitors are on the back side of the Motor Control Card, opposite the resistors.

1. Disconnect and lock out power from the ACS 501.

WARNING! Wait at least five minutes after disconnecting power from the drive before you attempt to service the drive. Bus capacitors in the intermediate circuit must discharge before servicing the drive. Check for zero volts at Terminals X50:21 – 29 and X2:(+) and (-) or between the input terminal block X1 and Terminal Block X2:(+) if an internal brake option is installed. Failure to check voltage may result in death or serious injury.

---

2. Check for zero volts at Terminals X50:21 – 29 and X2:(+) and (-) or between the input terminal block X1 and Terminal Block X2:(+) if an internal brake option is installed.

CAUTION: Electrostatic Discharge (ESD) can damage electronic circuits. Do not handle any components without following the proper ESD precautions.

Note: When disconnecting wires from components and terminals, mark the wires to correspond to their component and terminal connections.

3. Remove all control wiring from the Control Interface Card.

Note: Terminal Block X50 disconnects from the Control Interface Card in three whole sections. To do this, lift the interlocking tabs along the top edge of the three X50 sections and carefully pry the sections straight outward from the Control Interface Card. Mark the sections to correspond with their order of assembly on the Control Interface Card.

4. Remove the screws fastening the left side of the Control Interface Card to the ACS 501 chassis, disconnect the cable from X4 on the Motor Control Card, and swing the Control Interface Card open to access the Motor Control Card.
5. Set your multimeter to measure resistance.

Figure 6-4 illustrates the ACS 501- 002, 003, and 005 Motor Control Card.

Figure 6-4 Motor Control Card

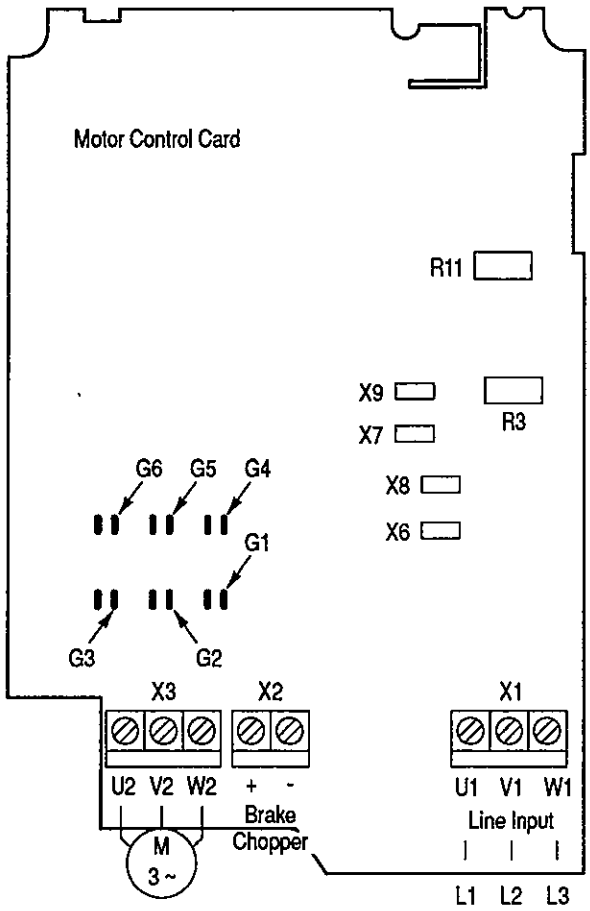

6. Measure Motor Control Card resistors R3 and R11. Refer to Table 6-1 for meter readings. Readings within ten percent tolerance of listed values are acceptable.

Table 6-1 Resistance Values

ACS 501 Rating	R3 Value, Ohms	R11 Value, Ohms
002	220k	220k
003	100k	100k
005	100k	100k

7. If your readings differ from the values in the table above, contact ABB Technical Support.

Insulation Test

1. Follow Resistance Test Steps 1 – 4, above.
2. Set the insulation tester to the 500 V DC range and test Capacitors C6 and C8 according to Table 6-2.

Table 6-2 Insulation Test Positions and Values

Drive	Capacitor	Meggar (+) Test Probe	Meggar (-) Test Probe	Reading, V DC
002	C6	Terminal X7	Card edge side of R3	500
	C8	Card edge side of R3	Terminal X2:(-)	500
003	C6	Terminal X7	Card edge side of R3	500
	C8	Card edge side of R3	Terminal X2:(-)	500
005	C6	Terminal X7	Card edge side of R3	500
	C8	Card edge side of R3	Terminal X2:(-)	500

3. Continue with each measurement until the reading stabilizes or until the reading suddenly falls.
4. If the reading suddenly falls, replace the capacitors. Contact your ABB Technical Support.

ACS 501 – 007 to 040

Resistance Test

1. Disconnect and lock out power from the ACS 501.

WARNING! Wait at least five minutes after disconnecting power from the drive before you attempt to service the drive. Bus capacitors in the intermediate circuit must discharge before servicing the drive. Check for zero volts at Terminals X50:21 – 29 and X2:(+) and (-) or between the input terminal block X1 and Terminal Block X2:(+) if an internal brake option is installed. Failure to check voltage may result in death or serious injury.

2. Check for zero volts at Terminals X50:21 – 29 and X2:(+) and (-) or between the input terminal block X1 and Terminal Block X2:(+) if an internal brake option is installed.

CAUTION: Electrostatic Discharge (ESD) can damage electronic circuits. Do not handle any components without following the proper ESD precautions.

Note: When disconnecting wires from components and terminals, mark the wires to correspond to their component and terminal connections.

3. Remove all control wiring from the Control Interface Card.

Note: Terminal Block X50 disconnects from the Control Interface Card in three whole sections. To do this, lift the interlocking tabs along the top edge of the three X50 sections and carefully pry the sections straight outward from the Control Interface Card. Mark the sections to correspond with their order of assembly on the Control Interface Card.

4. Remove the screws fastening the left side of the Control Interface Card to the ACS 501 chassis, disconnect the cable from X4 on the Motor Control Card, and swing the Control Interface Card open to access the Motor Control Card.
5. Remove all wires from the DC bus capacitors.
6. Set your multimeter to measure resistance.

Figure 6-5 illustrates the ACS 501-007 to 040 Motor Control Card.

Figure 6-5 Motor Control Card

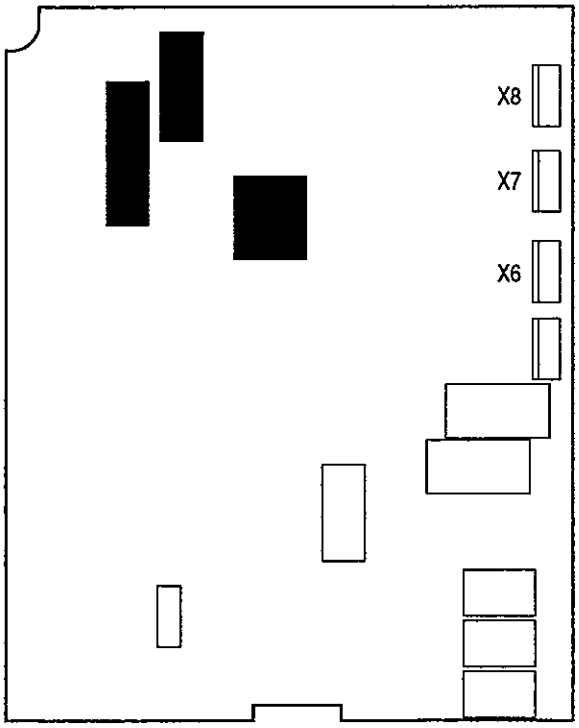

7. Connect the multimeter positive test probe to the DC bus capacitor positive terminal, and the negative test probe to the capacitor negative terminal.
8. The meter should register a small resistance and rise toward infinite resistance.
9. Repeat Steps 7 and 8 for each DC bus capacitor. If the reading remains below 100,000 ohms, replace the capacitor.

10. Continue with the following Insulation Test regardless of your Resistance Test results.

Insulation Test

1. Follow Resistance Test Steps 1 – 5, above.
2. Connect the insulation tester positive test probe to the capacitor positive terminal, and the negative test probe to the negative capacitor terminal.
3. Set the insulation tester to the 500 V DC range.
4. The meter should register a small resistance rising toward infinite resistance.
5. Continue measuring until the meter reading stabilizes or until the reading suddenly falls.
6. Repeat Steps 2 – 5 for each capacitor.
7. If a capacitor reading suddenly falls, replace the capacitor. Contact your ABB service representative.

IGBT Module Tests

The DC Bus Capacitor Tests are divided into groups according to drive ratings.

ACS 501 – 002, 003, and 005

1. Disconnect and lock out power from the ACS 501.

WARNING! Wait at least five minutes after disconnecting power from the drive before you attempt to service the drive. Bus capacitors in the intermediate circuit must discharge before servicing the drive. Check for zero volts at Terminals X50:21 – 29 and X2:(+) and (-) before servicing the drive. Failure to check voltage may result in death or serious injury.

---

2. Check for zero volts at Terminals X50:21 – 29 and X2:(+) and (-) before continuing.

CAUTION: Electrostatic Discharge (ESD) can damage electronic circuits. Do not handle any components without following the proper ESD precautions.

Note: When disconnecting wires from components and terminals, mark the wires to correspond to their component and terminal connections.

3. Remove all control wiring from the Control Interface Card.

Note: Terminal Block X50 disconnects from the Control Interface Card in three whole sections. To do this, lift the interlocking tabs along the top edge of the three X50 sections and carefully pry the sections straight outward from the Control Interface Card. Mark the sections to correspond with their order of assembly on the Control Interface Card.

4. Remove the screws fastening the left side of the Control Interface Card to the ACS 501 chassis, disconnect the cable from X4 on the Motor Control Card, and swing the Control Interface Card open to access the Motor Control Card.
5. Set your multimeter to test diodes.
6. Measure according to Table 6-3 and Table 6-4. Table 6-3 represents meter connections to Terminal Blocks X2 and X3.

Table 6-3 Meter Connections to Terminal Blocks X2 and X3

Meter (+) Test Probe	Meter (-) Test Probe	Reading
X3:U2	X2:(+)	0.4
X3:U2	X2:(-)	Over
X3:V2	X2:(+)	0.4
X3:V2	X2:(-)	Over
X3:W2	X2:(+)	0.4
X3:w2	X2:(-)	Over
X2:(+)	X3:U2	0.4
X2:(-)	X3:U2	Over
X2:(+)	X3:V2	0.4
X2:(-)	X3:V2	Over
X2:(+)	X3:W2	0.4
X2:(-)	X3:W2	Over

Table 6-4 represents meter connections to IGBTs on the Motor Control Card. For IGBT locations, refer to Figure 6-6.

Table 6-4 Meter Connections

Meter (+) Test Probe	Meter (-) Test Probe	Reading
G1	X3:W2	1.5
G1	X2:(+)	1.5
G2	X3:V2	1.5
G2	X2:(+)	1.5
G3	X3:U2	1.5
G3	X2:(+)	1.5
G4	X3:W2	1.2
G4	X2:(-)	1.2
G5	X3:V2	1.2
G5	X2:(-)	1.2
G6	X3:U2	1.2
G6	X2:(-)	1.2

Figure 6-6 Motor Control Card

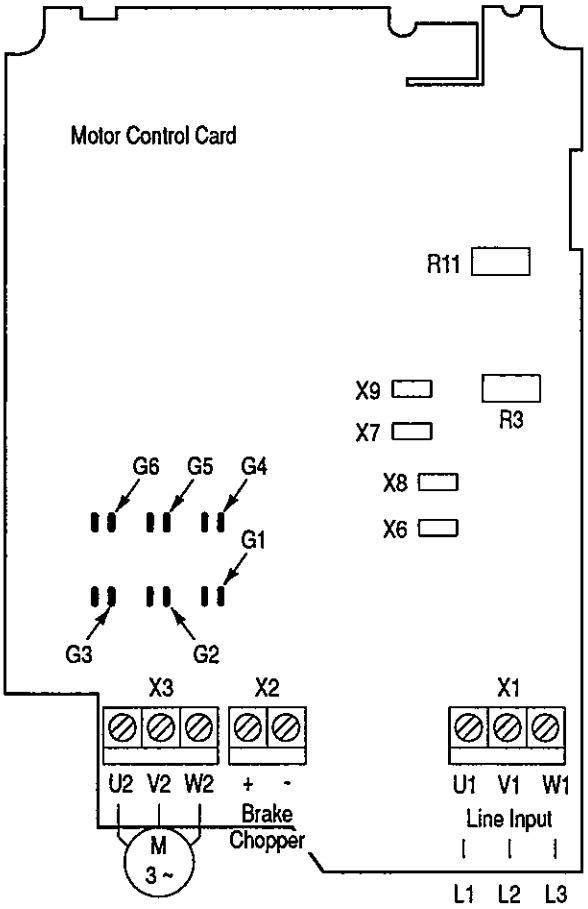

7. If your readings differ from the values in the table, contact your ABB Technical Support.

ACS 501 – 007 to 040

1. Disconnect and lock out power from the ACS 501.

WARNING! Wait at least five minutes after disconnecting power from the drive before you attempt to service the drive. Bus capacitors in the intermediate circuit must discharge before servicing the drive. Check for zero volts at Terminals X50:21 – 29 and X2:(+) and (-) before servicing the drive. Failure to check voltage may result in death or serious injury.

---

2. Check for zero volts at Terminals X50:21 – 29 and X2:(+) and (-) before continuing.

CAUTION: Electrostatic Discharge (ESD) can damage electronic circuits. Do not handle any components without following the proper ESD precautions.

Note: When disconnecting wires from components and terminals, mark the wires to correspond to their component and terminal connections.

3. Remove all control wiring from the Control Interface Card.

Note: Terminal Block X50 disconnects from the Control Interface Card in three whole sections. To do this, lift the interlocking tabs along the top edge of the three X50 sections and carefully pry the sections straight outward from the Control Interface Card. Mark the sections to correspond with their order of assembly on the Control Interface Card.

4. Remove the screws fastening the left side of the Control Interface Card to the ACS 501 chassis, disconnect the cable from X4 on the Motor Control Card, and swing the Control Interface Card open to access the Motor Control Card.
5. Remove the connections from Motor Control Card Terminals X6, X7, and X8.
6. Remove the control wiring from the Motor Control Card.
7. Remove the Motor Control Card from the chassis to access the IGBTs.

Figure 6-7 illustrates the IGBT schematic diagram and terminals.

Figure 6-7 IGBT Schematic Diagram and Terminals

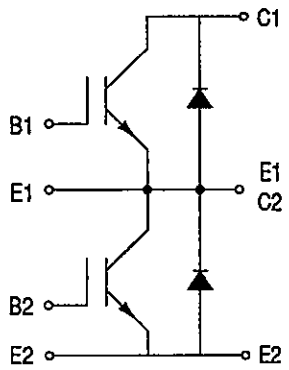

8. Set your multimeter to test diodes.
9. Test the IGBTs according to Table 6-5.

Table 6-5 IGBT Test Connections and Readings

Meter (+) Test Probe to IGBT Terminal:	Meter (-) Test Probe to IGBT Terminal:	Reading
C	E	Over
E	C	0.35
B	C	Over
B	E	Over

10. Repeat the tests in Step 9 for each IGBT. If your readings differ from the values in Table 6-5, replace the IGBT.

This page intentionally left blank.

Appendix A – ACS 501 Technical Data

Input Power

Voltage: 440/460/480/500 VAC ± 10% for 480 VAC units
380/400/415 VAC ± 10% for 380 VAC units
208/220/230/240 VAC ± 10% for 230 VAC units

Frequency: 48 – 63 Hz

Displacement Power Factor: > 0.98

Line Imbalance: ± 3% of V_R

Output Power

Voltage: 0 – V_N, three-phase (full voltage at field weakening point)

Frequency: ACS 501, 0 – 500 Hz
ACS 502, 0 – 120 Hz

Frequency Resolution: 0.01 Hz

Continuous Current (constant torque): 1.0 x I_R

Continuous Current (variable torque): 1.0 x I_{RSQ}

Maximum Current (1 min/every 10 min): 1.5 x I_N

Short Time Overload (2 sec/every 1 min): 2.0 x I_N

Overcurrent Trip: 3.75 x I_N instantaneous, 2.65 x I_N (RMS)

Field Weakening Point: ACS 501, 30 – 500 Hz

Field Weakening Point: ACS 502, 30 – 180 Hz

Continuous Loadability of Motor: 100% at rated speed (for F class motor)

Modulation Frequency: ACS 501, 1 – 12 kHz
ACS 502, 3 kHz

Analog Inputs

Two programmable analog inputs.

Current Reference: 0 – 20 mA, R_I = 250 ohms

- Minimum: 0 mA / 4 mA / 0 – 20 mA
- Maximum: 0 – 20 mA

Voltage Reference: 0 - 10 V, R_I = 200K ohms

- Minimum: 0 V / 2 V / 0 – 10 V
- Maximum: 0 – 10 V

Potentiometer: 1K – 10K ohms

Potentiometer Reference Voltage: 10 V, 10 mA

Resolution: AI1 = 10 Bit; AI2 = 12 Bit

Accuracy:

- Analog Control: ± 0.5%
- Digital Control: ± 0.01%

Reference Signal Update: < 20 mSec

Auxiliary Voltage (for Controls)

24 VDC ± 10%, 200 mA

Digital Inputs

Six programmable digital inputs.

< 4.0 V is logical 0

> 18 V is logical 1

Updating of Start/Stop Signal: < 5 mSec

Updating of Other Signals: < 20 mSec

Analog Outputs

Two programmable analog outputs.
0 – 20 mA or 4 - 20 mA, R_L less than or equal to 500 ohms, floating.

Digital Relay Outputs

Three programmable relay outputs, Form C contacts.

Maximum Switching Voltage: 300 VDC / 250 VAC

Maximum Switching Current/Power: 8 A @ 24 VDC, 0.4 A @ 250 VDC, or 2000 VA @ 250 VAC

Maximum Continuous Current: 2 A rms

Environmental Limits

Ambient Operating Temperature:

- Constant Torque 32° to 113°F (0° to 45°C) NEMA 1, f_s = 3 kHz
- Constant Torque 32° to 104°F (0° to 40°C) NEMA 12, f_s = 3 kHz
- Variable Torque 32° to 104°F (0° to 40°C) NEMA 1, f_s = 3 kHz

Storage Temperature: - 40°F to + 158°F (-40°C to +70°C)

Relative Humidity: less than 95%, non-condensing

Continuous Vibration Level: less than 0.5 G

Altitude: 3300 ft (1000 m) above sea level, derate 1% for every 330 ft (100 m) above 3300 ft (1000 m)

Enclosures

NEMA 1, NEMA 12, CHASSIS

Glossary

Analog Input (AI)

An Analog Input is an input to the ACS 501 for a user-supplied DC signal. The signal may be a speed reference or a process feedback. This signal can be from:

- Manual speed pot
- DC voltage (0 to 10 VDC)
- DC current (0 to 20 mADC)

Analog inputs on the ACS 501 Keypad Display are abbreviated AI.

Converter

The ACS 501 series adjustable frequency drive (AFD) uses a three-phase diode bridge to convert the applied AC line voltage to rectified DC.

DC Bus

The DC Bus is comprised of the:

- DC potential source (internal rectifier bridge or external source),
- DC link inductor (connecting the DC bus capacitors to the DC potential source), and
- DC bus capacitors that, together with the DC link inductor, provide filtration of the DC source potential and provide some buffering between the DC source and the power inverter section.

The DC Bus voltage is 1.35 x Supply Voltage (V_{IN}).

Default

A default is a pre-programmed value for a parameter. When you first install and start your ACS 501 drive, all application macro parameter values appearing on the Keypad Display are default settings. You may change these default settings in the process of customizing your drive for your particular drive application.

Digital Input (DI)

The Digital Inputs (DI) receive bistable (two-state On-Off) control signals from the outside world. An example of such would be a two-position Start-Stop selector switch. Digital inputs on the ACS 501 Keypad Display are abbreviated DI.

EEPROM

EEPROM is an acronym for Electrically Erasable Programmable Read Only Memory. The EEPROM is the non-volatile memory that stores all parameters, even when power is removed.

ESD

ESD is an acronym for Electrostatic Discharge. ESD cautions indicate situations in which static electricity can damage circuit boards on the ACS 501 drive. Follow the precautions listed in the *Safety* section at the beginning of this manual when installing or removing circuit boards.

Field Weakening Point

This is the point at which the output voltage no longer increases as the output frequency is increased. Operation above this point results in reduced motor torque capability while the output kVA remains constant. Refer to Parameter 20.4.4 (Field Weak Point).

Group

A Group is the second of three display levels in ACS 501 programming. Groups group parameters by their functionality, and provide access to them in the same way that Mains provide access to Groups. Groups appear within their respective Mains. For example, if you need to access Group 20.4 or Group 20.3, you must first select Main 20 using specific Keypad procedures. Refer to *Chapter 2 – Overview of the ACS 501.*

IGBT

An IGBT is a fast switching power transistor. ACS 501 drives use these in the inverter section as part of the process of changing DC voltage to AC voltage.

I_R

This notation abbreviates the constant torque rated output current, in amperes, of an ACS 501.

I_{RSQ}

This notation abbreviates the rated variable drive output current, in amperes, of an ACS 501.

I_N

This notation abbreviates the current which the drive trips and on which settings are based.

Inverter

The inverter changes DC power to AC power for application to the motor windings. Control of the inverter affords variable frequency and voltage to be applied to the motor for control of motor speed and direction.

IR Compensation

IR Compensation is a parameter that provides the motor with extra torque at motor speeds between 0.1 Hz and the set Field Weakening Point. Refer to Parameter 20.4.4 (Field Weak Point) and *Field Weakening Point* in this glossary.

Joystick Control

Joystick control allows you to use a joystick for external speed and direction drive control through analog input AI1. Refer to Parameter 10.2.2 (External Ref1 Sel).

Line Voltage

Line voltage in this manual means the input voltage that provides power to the ACS 501. Line voltage is connected to the ACS 501 Terminals L_1, L_2, and L_3. Refer to Start-up Data Parameter D (Supply Voltage). Refer to *Supply Voltage* in this glossary.

Living Zero

The Living Zero function allows the ACS 501 to detect a loss of reference signal. Set Parameter 10.5.1 (Minimum AI1) to a value greater than 0.3 V/0.6 mA for a Living Zero function. You can then supervise the presence of a control signal by setting Parameter 30.1.2 (AI < Min Function) to `WARNING` or `FAULT`. A Warning or Fault message will then display if the analog input falls below the set minimum.

Macro

A macro is a pre-programmed set of defaults for all of the parameters, which are typical for the specified application. When you select a macro from Start-up Data Parameter B (Applications), you select the macro that most closely defines the drive functions necessary for your particular application. After selecting the macro, you can modify or customize the macro to specifically conform to your application.

Refer to the *ACS 500 Adjustable Frequency AC Drives 2 to 350 HP Programming Manual Including Application Macros* for information on macro applications, functions, and parameter values.

Main

A Main is the first of four display levels in the ACS 501 programming. Mains provide access to Groups in the same way that Groups provide access to Parameters. For example, to access Main 10 while viewing any of the 28 Operating Data Parameters, press [Right Arrow] on the Control Panel Keypad. From the Main 10 display, press [Up Arrow] to access Main 20, Main 30, and Main 40. Refer to *Chapter 2 – Overview of the ACS 501.*

Meggar Test

A Meggar Test measures an insulation system's resistance. This test passes a low current, high voltage through a capacitor and measures the resistance of the insulation system. Meggar test results are usually expressed in megohms.

CAUTION: The ACS 501 must not be subjected to testing of this type as damage could result. Any wires connected to the ACS 501 MUST be disconnected from the ACS 501 before being subjected to this type of test.

Memory

The ACS 501 memory provides computer storage for program data and instructions.

Multimeter

A multimeter measures electric component functions and values such as voltage (volts), resistance (ohms), and current (amperes). Some multimeters also test the condition of diodes.

Operating Data

Operating Data defines ACS 501 Parameters 1 (Output Frequency) through 28 (Act Value 2 (PFC)) located at the first of four display levels.

Many Operating Data parameters simply display information such as drive temperature and motor speed, and some parameter values can be changed according to drive application needs.

Parameter

A Parameter is the last of four display levels in the ACS 501 programming. In most cases, Groups provide access to Parameters, and Parameters allow you to modify macros, change start-up settings, and monitor drive and motor functions. Refer to *Chapter 2 – Overview of the ACS 501.*

P_R

This notation abbreviates the rated constant torque output power rating of an ACS 501.

P_{RSQ}

This notation abbreviates the rated variable torque output power rating of an ACS 501.

Rectifier

A rectifier is a device that permits current flow in one direction and blocks the flow of current in the other direction. In today's technology, rectifiers are of the silicon diode type. The ACS 501 uses six rectifiers, configured into a three-phase bridge configuration, as the power converter section of the drive.

Slip Compensation

Slip compensation is a feature in the ACS 501 that allows the drive to compensate for motor slip caused by increased load.

Start-up Data

Start-up Data parameters allow you to set certain parameter values prior to starting the ACS 501. You set these parameters according to the language you want the drive to display (such as German, Spanish, or English), the supply voltage providing power to the drive, and so on. In most cases, these parameters are one-time settings made only during the drive installation process.

Start-up Data parameters are not accessed through the same display levels as Operating Data parameters, Main level, or Group level. Instead, you must first view Operating Data Parameter 1 (Output Frequency), press and hold [*] on the Control Panel Keypad, then press [Right Arrow]. Only this procedure accesses Start-up Data parameters on the ACS 501.

Supply Voltage

Supply voltage in this manual means the input voltage that provides power to the ACS 501. Supply voltage is connected to ACS 501 Terminals L_1, L_2, and L_3. Refer to Start-up Data Parameter D (Supply Voltage). Refer to *Line Voltage* and V_{IN} in this glossary.

T_R

This notation abbreviates the rated output torque of the motor.

V_{IN}

This notation abbreviates the input voltage of the drive. Refer to *Supply Voltage* in this glossary.

V_N

This notation abbreviates the voltage for which the drive is programmed.

V_R

This notation abbreviates the rated input voltage setting, in volts, of an ACS 501.

Index

A

ACS 501 drive
- inspection prior to installation 3-9
- storage before installation 3-9

Ambient temperature 3-2
Analog inputs 3-15
Analog outputs 3-15
APPLIC. RESTORE 4-3
Application macros
- customizing 4-7
- default settings 2-8
- overview 2-8

APPLICATIONS 4-3
Audience, intended 1-2

C

Conduit sizes 3-6
Control connections
- SNAT-759 3-17
- X50 3-14

Control function, illustration 2-4
Control interface card
- component description 2-2
- ESD warning iv

Control panel
- display 1-2, 2-5
- keys 1-2, 2-6
- LCD display illustration 2-5
- operation 2-5
- table of keypad functions 2-6
- using the keys 1-2

Control wiring
- and application macros 3-9
- restrictions 3-9
- sizes 3-9
- terminals 3-9

Conventions used in this manual 1-2
Cooling requirements 3-2

D

Digital inputs 3-15
Digital outputs 3-16
Dimensions 3-4
Display contrast, adjusting 2-8
Display indications 2-5
Drive code, nameplate identification 2-1

E

Environment 3-2
ESD warning iv

F

Fault
- erasing 5-2
- history 5-2
- indications 5-1
- resetting 5-1
- warning messages 5-3

Functions, descriptions 2-2
Fuse sizes 3-7

G

General information, component descriptions 2-2
Group, defined 1-2

H

Hardware components, illustration 2-4

I

Input power
- terminal connections to ACS 501 3-13
- wire sizes 3-7

K

Keypad functions 2-6
Keys, control panel 1-2

L

LANGUAGE 4-3
Liability information 1-3

M

Macros,overview 2-8
Main, defined 1-2
Mechanical installation 3-10
Motor
- insulation check 3-12
- output wiring connections from ACS 501 3-14

MOTOR BASE FREQUENCY 4-4
MOTOR BASE R.P.M. 4-4

Motor control card
- description 2-2
- ESD warning iv

MOTOR CURRENT -FLA 4-3
MOTOR NOM. VOLTAGE 4-4
MOTOR POWER 4-4
MOTOR POWER FACTOR 4-4

N

Nameplate, identification 2-1

O

Output power
- maximum wire lengths 3-8
- terminal connections from ACS 501 3-14
- terminals illustrated 3-14

P

Parameter
- defined 1-2
- value changing example 2-7

Potentiometer 3-15
Pre-installation planning
- conduit sizes 3-6
- drive dimensions illustrated 3-4
- environment 3-2
- mounting 3-3
- mounting area requirements 3-3
- output wire length restrictions 3-8
- power connections 3-10
- power wiring table 3-6

Programming example 2-7
Publications related to this manual 1-3

R

Relay outputs 3-16

S

Safety instructions
- general iii
- grounding 3-1
- warning symbols iii

Service
- DC Bus capacitor tests 6-6
- IGBT module tests 6-11
- precautions 6-1
- rectifier tests 6-1

Specifications A-1
Start-up
- default parameters 4-7
- inspection 4-2
- keypad control 4-5
- parameters 4-3
- safety precautions 4-1

Start-up data parameters 4-3
SUPPLY VOLTAGE 4-3

T

Technical data A-1
Terminal block, defined 1-3
Tests
- hi pot 3-10
- Meggar 3-10

Troubleshooting 5-1

U

USER DISPLAY SCALE 4-3

V

Voltage tolerance tests
- hi pot warning 3-10
- Meggar warning 3-10

W

Warranty information 1-3, 3-9
Wire sizes
- control 3-9
- power 3-6

X

X50 3-15, 3-17

ASEA BROWN BOVERI

ACS 501-04B
EFFECTIVE 5/1/93

ABB Drives Inc.
Standard Drives Division
16250 West Glendale Drive
New Berlin, WI 53151
Telephone: (414) 785-3416
Fax: (414) 785-0397

Printed in USA

Wilfley Operating Handbook for Centrifugal Sand Pump Model K

Wilfley

Centrifugal Sand Pump

Operating Handbook

Model K

WILFLEY

Model K Operating Handbook

Table of Contents

Safety Precautions	2
Description of Pump Features and Components	3
General Description Installation and Start-up Instructions	4
Recommended Sump Sizes for Maximum Capacities General Service and Maintenance General Instructions for Ordering Parts	5
Model K Assembly Procedures	6
Metal Pumping Parts	8
Guards, Fixtures and Couplings	9
Check Valve Assembly Crane Assembly	10
Model K Parts List and Sectional View	11
Expeller Deflector Ring Intake Spool and Blind Flange	12
Discharge Keeper Assemblies	13
Bearing Unit Assembly	14
KBA Pump Assembly	15
KH Pump Assembly	18
Corrosion/Abrasion Resistant Pump Assembly	19
Trouble Shooting Guide	20
Service Record	23

For additional information about Wilfley pumps, call or write our office in Denver, or the representative in your area.

Please do not hesitate to contact us concerning any aspect of our pumps.

WILFLEY

A.R. Wilfley & Sons, Inc.
P.O. Box 2330
Denver, Colorado 80201
1-303-779-1777

Special Service
Your Wilfley K pumps may be returned to the factory, at any time, for complete overhaul and repair. Each pump is completely disassembled and worn or inoperable parts are replaced. All rebuilt pumps are subjected to the same testing procedures as newly constructed units.

For more information on rebuilding, contact A. R. Wilfley and Sons 1-303-779-1777

Like all machinery, *centrifugal pumps can be dangerous if used improperly.* Any of the following list of misuses may result in a pump which does not function properly. A pump which does not function properly may be a hazard and could cause damage or injury.

For maximum safety and reliability use only factory supplied parts and closely follow all maintenance and operating recommendations and instructions.

It is not possible to list all the conceivable misuses of a centrifugal pump. Therefore, the following list is not meant to be complete and is provided only as a guide and as example of the types of misuse which can damage a pump and cause injury. The list will also give a good idea of the kinds of misuses which will void any and all warranties, if any.

1. Do not run a pump with the discharge valve closed.

2. Do not run a pump in the reverse direction.

3. Do not start a pump which is "windmilling" in the reverse direction due to fluid flowing back down the discharge pipe and into the suction pipe.

4. Do not continue to operate a pump where there are indications that something is rubbing, binding or knocking.

5. Do not continue to run a pump which gives an indication of overheating.

6. Do not operate a pump with the belt or coupling guard removed. Make sure the guard fits snugly around the belts or coupling so there are no openings.

7. Do not operate a pump if the governor weights are of different sizes.

8. Do not operate a pump that is vibrating, surging or making abnormal noise.

9. Do not work on a pump unless the drive system is locked out and the pump is disconnected from the drive system.

10. Do not connect the pump to the drive system without first checking to see that the drive system is running in the correct direction.

11. Do not rely on the factory's alignment of pump and the drive system.

12. Do not change the pumping conditions or installation of a Wilfley pump without consulting A. R. Wilfley & Sons, Inc. first to ascertain if the pump is capable of handling the new conditions and/or fluid.

13. Do not put a cold liquid in a hot pump or a hot liquid in a cold pump.

14. Do not hit a pump with any object.

15. Do not use worn or faulty parts.

16. Do not stick hands, arms, legs or any other objects into the discharge or intake or any other opening of a pump.

17. Do not weld attachments to the pump.

18. Do not apply external heat to the pump.

19. Do not lift the pump by its case.

20. Do not examine a pump without using proper eye and face protection.

21. Some materials deteriorate with time. If your pump has been out of service for more than 3 months, please contact A. R. Wilfley & Sons, Inc. for information concerning its suitability for service.

Description of Pump Features and Components

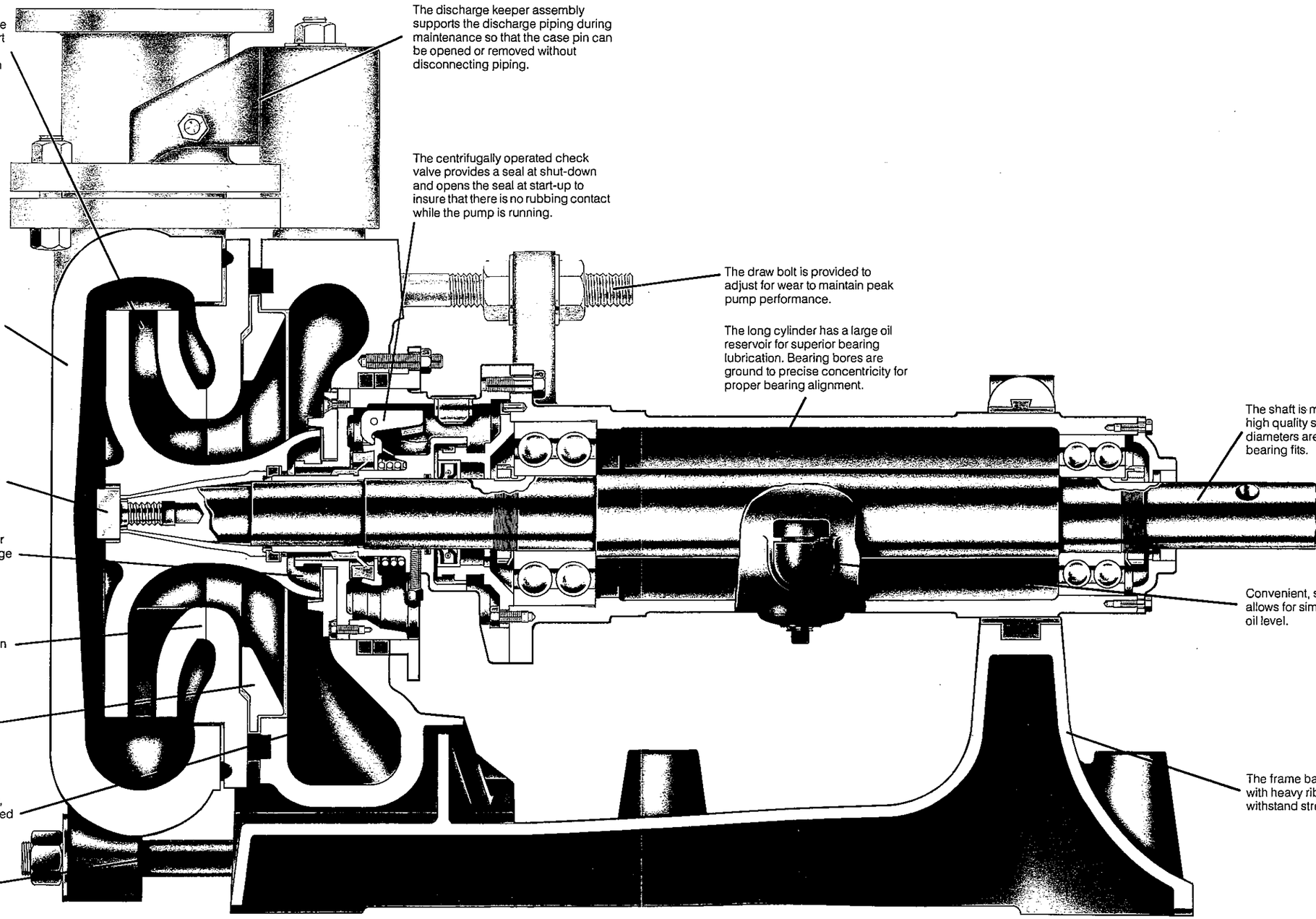

GENERAL DESCRIPTION AND THEORY OF OPERATION

1. **Features:**
   a. The Wilfley Model K is a horizontal, base mounted, seal-less (no packing, water glands, or mechanical seals), single stage, rear intake centrifugal pump designed to handle corrosive and abrasive slurries.
   b. Incorporated as an integral part of the Runner is an Expeller that creates a hydraulic seal which prevents leakage out along the Shaft while the pump is operating, eliminating the need for packing or mechanical seals. A simple governor mechanism (Check Valve) opens centrifugally and closes under coil spring pressure to prevent leakage at shutdown and eliminate rubbing contact while pump is operating.
   c. Wetted parts are available in many materials of construction including Alloyed, White Iron, Ni-Hard #1, Ni-Hard #4, Maxalloy 2, Rubber, Neoprene and other synthetic elastomers, and Stainless Steels.
   d. Quick change of wear parts is possible without disturbing intake or discharge piping because of the rear intake, the Discharge Keeper Assembly, and the Crane Arm Assembly.
   e. An external Draw Bolt is used to maintain proper clearances and pump efficiency.
   f. The Model K and its companion Model KL are available in sizes from 1" to 16" discharge and are supplied in three types of drives: overhead V-belt, direct driven and horizontal V-belt driven.
2. **Advantages:**
   a. Specifically due to the packingless feature:
      (1) The pump has non-suction characteristics that provide for:
         (a) suction throttling and capacity control (that reduces vari-speed requirements).
         (b) a lower probability for air trapping.
         (c) a greater surge capacity.
         (d) ability to handle frothy slurries.
      (2) there is no dilution of product.
      (3) there is no rubbing contact to cause seal wear.
      (4) the pump can be operated completely dry.
   b. Because of the rear in-take feature:
      (1) the pump can be fitted with a back flush or dump system.
      (2) the wear parts that can be changed quickly without disturbing either intake or discharge piping.
      (3) intake piping can be bolted to either intake flange without loss of efficiency.
3. **Benefits to you:**
   Wilfley's unique design with heavy-duty construction, packingless characteristic and quick-change features can save operating dollars. You will realize less down-time for maintenance, no product loss or dilution, and true trouble-free operation all of which can maximize profits by lowering the cost of labor and operation.

   In addition, Wilfley provides a life-time engineering service for your pump. Anytime you have operating or maintenance problems or need to change the pump application in anyway, Wilfley is ready to help you free of charge.

INSTALLATION AND START-UP INSTRUCTIONS

1. Use a Wilfley pump only for the specific application for which it was sold and in the manner prescribed by A. R. Wilfley and Sons, Inc. Wilfley pumps operate with the fluid pumped open to (in contact with) the atmosphere. Use added precautions (and appropriate safeguards) when handling volatile, inflammable or toxic fluids to pre vent venting of fumes without adequate ventilation.
2. The Wilfley slurry pump has no suction and, therefore, must be set below the supply so that the material to be pumped will flow into it by gravity. A hopper bottom, intake sump or tank should be provided. Intake pipe from sump should slope and be as short as possible. Do not pump from one pump directly into a second pump, but provide an intake sump for each pump.
3. The pump should be securely bolted down on a solid, vibration-free, non-flexible foundation and the shaft should be level. Bolting down ordinarily will not distort the bearing alignment. Allow ample room for changing of pump parts because these parts are sometimes very heavy. Support the piping independently and be sure to consider thermal expansion and loading.
4. All flanges are 125# American Standard. The discharge line should have sufficient spring to allow the discharge keeper to be raised about one half inch.
5. Intake pipe may be connected to either or both sides of the pump and need not be disturbed to change the pumping parts or the bearing unit.
6. Provide valves close to the pump in both intake and discharge lines when intake of pump is connected directly to a high tank and in all cement or clay slurry installations.
7. Direction of rotation is counterclockwise when looking at the case end of the pump as indicated by arrow on the case. **CHECK ROTATION OF THE DRIVE SYSTEM WITH THE COUPLING OR BELT DRIVE DISCONNECTED FROM THE PUMP. STARTING THE PUMP BACKWARDS WILL CAUSE DAMAGE TO THE INTERNAL PARTS.**
8. Rotate pump by hand. There should be some drag due to the Check Valve being engaged. If unable to rotate the pump, check wear adjustment per instruction number 2, page 5.
9. Check oil level by removing Oil Filler Cap. Oil should be one quarter inch above bottom of filler elbow. If below this, fill to this point with SAE 20 non-detergent oil. Do not overfill because oil will leak out along shaft if level is too high.
10. On direct driven pumps check the alignment between the pump and the drive system.
11. Use proper eye and face protection when examining, adjusting, maintaining or in any other way working with a pump. Operate the pump with the guard firmly attached. Read all instruction tags on the pump. Stand at a safe distance during startup.

12. Outside corrosion may damage the pump. Protect pump from corrosive materials.
13. Use only factory supplied spare parts. Pumps need periodic maintenance. Replace worn or faulty parts and keep moving parts appropriately clean and oiled or greased. Use the appropriate tool for any given operation.
14. The Wilfley pump must be correctly speeded for the proper functioning of the centrifugal seal and check valve. Ask the engineering department at A. R. Wilfley and Sons, Inc. if you have any questions or problems concerning operation, maintenance, application or anything else concerning your Wilfley pump. A good reference book to have is published by the Hydraulic Institute and is titled "Hydraulic Institute Standards," 122 E. 42d St., N.Y., N.Y. 10017.

RECOMMENDED SUMP SIZES FOR MAXIMUM CAPACITIES

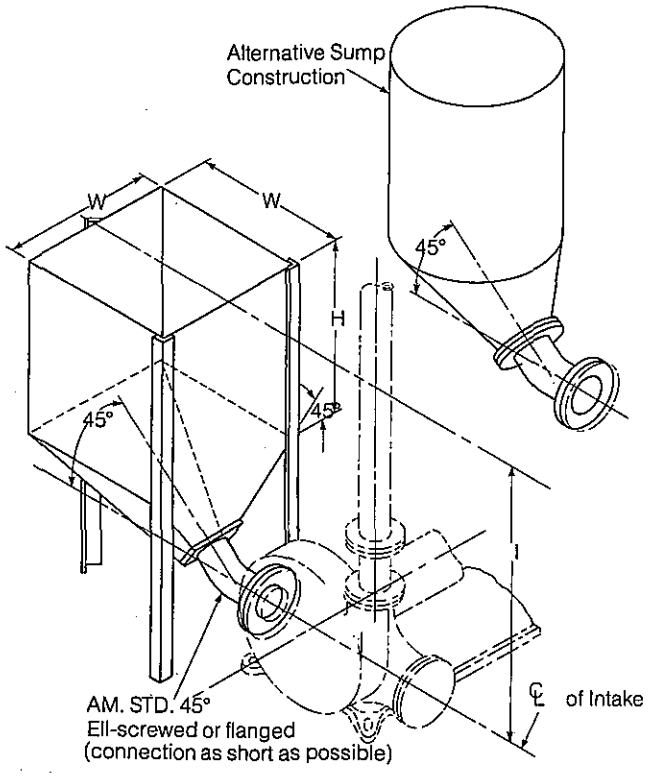

SUMP DIMENSIONS											
Pump Size	1" & 1½"	2" & 2½"	3"	4"	5"	6"	8"	10"	12"	14"	16"
W—Inches	18	24	30	36	48 42 Min.	60 48 Min.	72 60 Min.	84 75 Min.	132 120 Min.	150	190
H—Inches	30	36	42	48	54	66	72	84 75 Min.	84 75 Min.	96	108
I—Inches	46	57	68	79	96 90 Min.	118 106 Min.	135 123 Min.	166 150 Min.	166 150 Min.	192	210

NOTE: For partial capacity sizes may be reduced proportionately.

GENERAL SERVICE AND MAINTENANCE

1. Lubrication:

A. Use 300 second viscosity turbine oil or SAE 20.

B. Keep oil level ⅛" to ¼" above bottom of inside of Filler Elbow. DO NOT OVERFILL.

C. After running the pump for one week, drain and fill with new oil.

D. Change oil every three months unless oil becomes contaminated sooner. Should oil appear contaminated flush with clean oil, SAE 10, and refill with 300 second viscosity oil or SAE 20.

2. Wear Adjustment:

A. This adjustment controls the clearance between the Runner and the Follower Plate and takes care of any drop in efficiency or capacity caused by wear.

B. To make this adjustment: loosen Pedestal Cap; loosen outer Draw Bolt Nut; move the bearing unit and runner as a unit to rear of pump by turning inner Draw Bolt Nut until the Runner touches the Follower Plate; back off ¼ turn and lock in position by tightening Outer Draw Bolt Nut.

C. Rubber parts should be adjusted during installation. Readjustment is seldom needed. Caution: Never adjust the clearance of rubber parts while pump is running. After parts have touched, back off ⅓ to ½ turn of the Inner Draw Bolt Nut.

D. Excessive wear to metal parts will result from adjustments made too often. As a general rule adjust clearance not more than four times during the life of the follower plate.

E. All adjustments should be made while turning pump over by hand. Caution should be taken not to rotate in wrong direction.

3. Every time pump is re-assembled, the Follower Plate Gasket (K3A) should be replaced.

GENERAL INSTRUCTIONS FOR ORDERING PARTS

Give serial number of pump or bearing unit.

Give size and model of pump.

Give part numbers.

Give the diameter of Runners whether special or standard.

Special Runners and other parts should be clearly specified.

MODEL K ASSEMBLY PROCEDURES

1. To Assemble Intake Chamber On Frame Base (K6SB).

a. Position Intake Chamber on Frame Base mounting pads in alignment with mounting holes.

b. Install Intake Chamber Capscrews (K6E) in tapped holes in Frame Base.

c. Install Case Stud Bolts (K39) in tapped holes in front face of Intake Chamber.

2. To Assemble Intake Chamber (K6SA).

a. Install two Follower Plate Pins (K3E) in front face of Intake Chamber.

b. Install Frame Packing Ring (K42) in groove on front face of Intake Chamber.

c. Install Blind Intake Flange (K36) on Intake Chamber

d. Install Intake Spool (K34) on Intake Chamber (Do this only on 1″ thru 2½″ discharge pumps only).

e. Install Gland Stud Bolts (K40) in tapped holes in rear face of Intake Chamber.

f. Install Draw Bolt (K11), inner Draw Bolt Nut (K11A) and Draw Bolt Washer (K11B) on Intake Chamber.

3. To Assemble Bearing Unit (K13).

a. Heat Thrust Bearing (K14) and Radial Bearing (K32) to temperature of 175° - 200°F using bearing induction heater.

b. Install Thrust Bearing on Shaft (K15) against front bearing shoulder.

c. Install Thrust Bearing Lockwasher (K15C) on Shaft.

d. Install Thrust Bearing Locknut (K15A) on Shaft.

e. Install Radial Bearing, Radial Bearing Lockwasher (K15D) and Radial Bearing Locknut (K15B) on rear of Shaft in the same manner as Thrust Bearing.

f. Carefully insert Shaft and Bearings into Long Cylinder (K16). This can most easily be done by standing Long Cylinder on end.

g. Install Front Bearing Cap Oil Seal (K55B) in Front Bearing Cap (K55).

h. Install Front Bearing Cap on Long Cylinder using Front Bearing Cap Machine Screws (K55A).

i. Install End Cap Oil Seal (K23A) in End Cap (K23).

j. Install End Cap on Long Cylinder using End Cap Capscrews (K23B).

k. Install Short Cylinder (K22) on Long Cylinder using Long Cylinder Capscrews (K16D).

4. To Assemble Check Valve Assembly (K27).

a. Install Check Valve Spring (K27D) in pocket of Check Valve Spider (K27A).

b. Install Check Valve Packing Diaphragm Plate (K27P) against Check Valve Spring and compress until Packing Diaphragm Plate is seated on Check Valve Spider (K27A).

c. Install Check Valve Weight (K27B) in slot and secure with Check Valve Cotter Pin (K27E) and Check Valve Cotter Pin Washer (K27T). Do the same with the other weight.

d. Install Check Valve Setscrew (K27H) in Check Valve Sleeve (K27J) and Check Valve Sleeve O-Ring (K27S) in groove of Check Valve Sleeve.

e. Attach Check Valve Spider Assembly to Check Valve Sleeve (K27J) using Check Valve Spider Machine Screws (K27K).

f. Slide Check Valve Packing Diaphragm (K27F) on barrel of Check Valve Sleeve and seat in pocket of Check Valve Packing Diaphragm Plate.

g. Slide Check Valve Assembly on Shaft until seated on Shaft shoulder.

h. Align and tighten Check Valve Setscrew in notch on Shaft.

i. Install Short Cylinder Head (K21) using Short Cylinder Head Machine Screws (K21A). Check Valve Spring should be compressed.

5. To Assemble Bearing Unit into Intake Chamber.

a. Push Gland Ring (K7) over Short Cylinder with large flange facing toward Long Cylinder.

b. Install Bearing Unit in rear bore of Intake Chamber. Align Draw Bolt (K11) with draw bolt lug on Long Cylinder. Front face of Short Cylinder Head should be flush with the inside face of the Intake Chamber.

c. Install Pedestal Cap (K28) on Frame Base with Pedestal Cap Capscrews (K28E). Tighten only finger tight at this time.

d. Install outer Draw Bolt Washer (K11B) and outer Draw Bolt Nut (K11A). Tighten only finger tight at this time.

e. Install 2 layers of Gland Packing Ring (K41) in rear bore of Intake Chamber. Displace joints in rings 90° from each other to avoid leaking.

f. Bolt Gland Ring onto Gland Stud Bolts (K40) using Gland Stud Bolt Nuts (K40A). Nuts should only be hand tight at this time.

g. Install Short Cylinder Cover. (K22C).

6. To Assemble Wetted Parts.

a. Install Die Ring (K26) over hub of Short Cylinder Head using Die Ring Machine Screws (K26A).

b. Install Frame Protecting Ring (K6X) in front bore of Intake Chamber.

Note: Install expeller for two-piece runner only.

c. Install Follower Plate (K3) on two Follower Plate Pins (K3E). Insure that Follower Plate Gasket (K3A) is cemented in groove.

d. Install Runner (K25) on Shaft. Insure that Runner Gasket (K25A) is seated in groove at expeller end on Runner bore.

e. Install Runner Bolt (K29) on Shaft. Pull Runner forward to engage Runner Bolt in slot. Tighten down Runner. Runner should turn freely with no metallic scraping.

f. Install Case (K1) on Intake Chamber over Case Stud Bolts (K39) using Case Stud Bolt Washers (K39B) and Case Stud Bolt Nuts (K39A).

g. To set Runner clearance loosen outer Draw Bolt Nut and turn inner Draw Bolt Nut clockwise until Runner drags on Follower Plate. Loosen inner Draw Bolt Nut ¼ turn and tighten outer Draw Bolt Nut.

h. Tighten Gland Stud Bolt Nuts.

i. Tighten Pedestal Cap Capscrews.

7. To Assemble Crane Assembly (K37). (3K Thru 8K Pumps Only)

a. Install Crane Pin (K37A) in the hole in top left side of Intake Chamber.

b. Slide Primary Crane Arm (K37B) over Crane Pin.

c. Insert Crane Hinge Pin Ball (K37E) in pocket in lower half of yoke in Primary Crane Arm.

d. Insert large end of Secondary Crane Arm (K37F) in yoke end of Primary Crane Arm.

e. Insert Crane Hinge Pin (K37D) into aligned bore.

f. Install Secondary Crane Arm Pin (K37G).

g. Install Crane Hook (K37H) through crane hook hole in Case.

h. Insert Crane Hook in hole of Secondary Crane Arm.

i. Install Crane Hook Washer (K37K) and 2 Nuts (K37J) on Crane Hook.

8. To Assemble Discharge Keeper Assembly (for 1K through 8K Pumps).

a. Install Yoke Setscrew (K33R) in Keeper Yoke (K33A).

b. Install Yoke Setscrew Jam Nut (K33S) on setscrew. Align 2 sides of square head parallel to axis of Keeper Yoke bore.

c. Thread Keeper Bolt (K33B) into Keeper Pin (K33Q) 1/16″ below surface of Pin.

d. Install assembled Keeper Pin and Bolt in Keeper Yoke.

(1) Lubricate Keeper Pin.

(2) Align keyway in Keeper Pin with square head on Keeper Yoke Setscrew.

(3) Slide Keeper Pin into bore of Keeper Yoke.

(4) Install Keeper Bolt Washer (K33L) and Keeper Bolt Nut (K33K) on Keeper Bolt. Draw nut up snuggly.

(5) Install Keeper Bolt Nut Pin (K33M).

e. Install Discharge Keeper Sleeve (K33C) (1K thru 5K) or Discharge Keeper Sleeve Slip Joint Assembly (K33CA) (6K and 8K).

f. Install Discharge Keeper Sleeve Bolt (K33D) and Nut (K33E).

g. On 3K and above, bolt Keeper Sleeve to discharge flange on Case. 1K thru 2½K tighten down Keeper Sleeve by tightening Keeper Bolt.

h. Note: For 6K and 8K Draw Bolt Type Discharge Keeper (K33CA) is also available but does not use Yoke.

i. Note: Do not over tighten Case Discharge Flange Bolts (K1B). The Case Gasket (K1A) Seal will be destroyed.

QUICK CHANGE FEATURES

The four wear parts—Case, Runner, Die Ring, and Follower Plate—can be changed within a few minutes without disturbing the intake or discharge piping. This quick change is made possible by the rear intake, the Discharge Keeper, and the manner in which the Runner is attached to the Shaft.

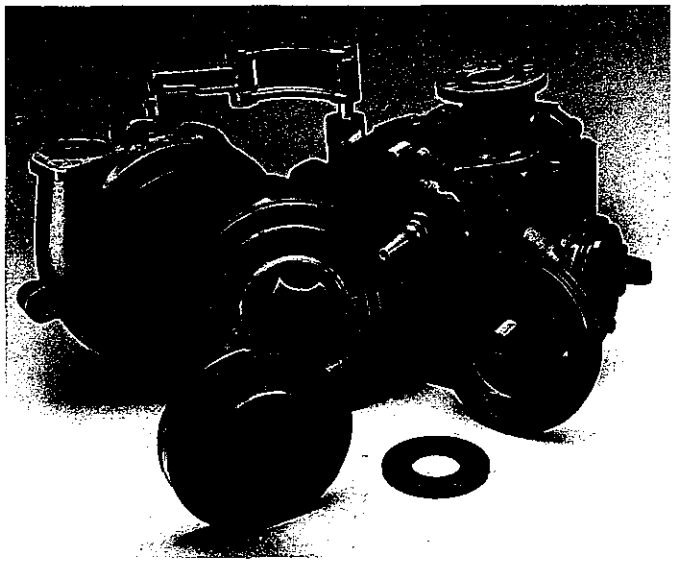

WETTED-END PUMPING PARTS

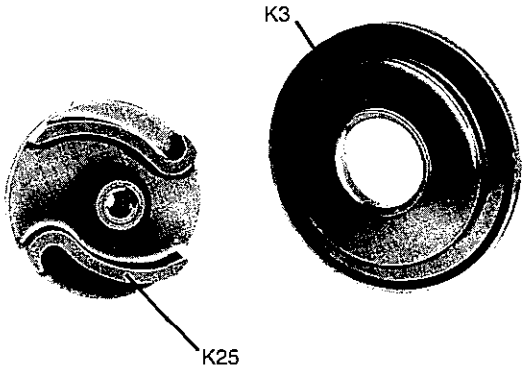

MODEL K. TRASH PUMP.

PART #	PART NAME
K3	Follower Plate
K25	Runner

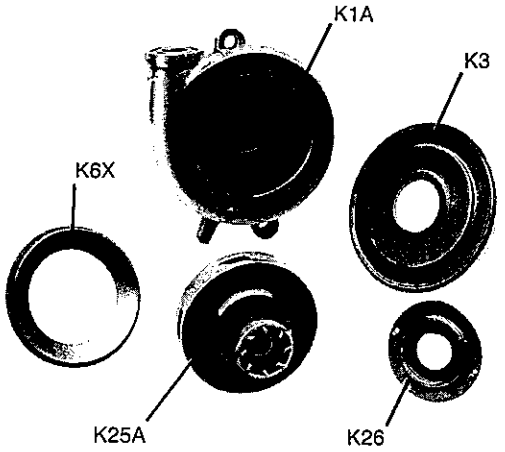

METAL PUMPING PARTS — ONE PIECE RUNNER

PART #	PART NAME
K1	Case
K1A	Case Gasket
K3	Follower Plate
K6X	Frame Protecting Ring
K25	Runner
K25A	Runner Gasket
K26	Die Ring

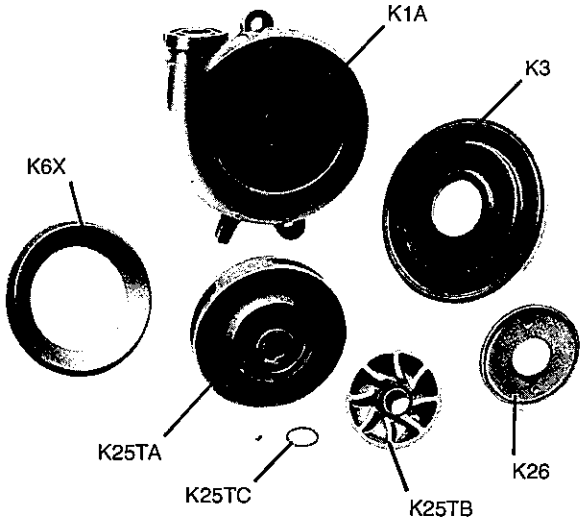

METAL PUMPING PARTS — 2 PIECE RUNNER

PART #	PART NAME
K1	Case
K1A	Case Gasket
K3	Follower Plate
K6X	Frame Protecting Ring
K25TA	Runner, Bayonet Type
K25TB	Expeller
K25TC	Runner, Expeller O-Ring
K26	Die Ring

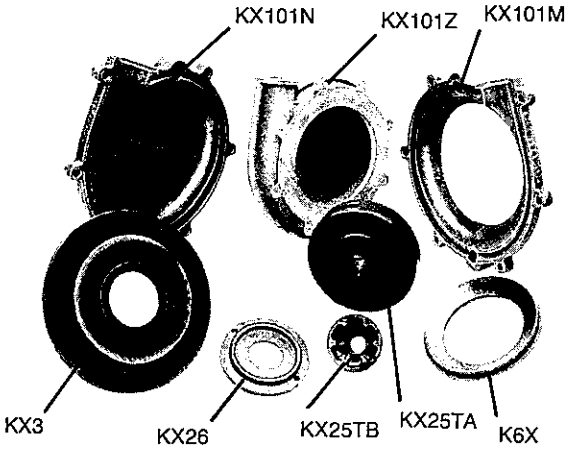

RUBBER LINED CASE, REPLACEABLE LINER TYPE.

PART #	PART NAME
KX3	Follower Plate
K6X	Frame Protecting Ring
KX25TA	Runner
KX25TB	Expeller, Bayonet Type
KX26	Die Ring
KX101N	Case Shell, Closed Half
KX101M	Case Shell, Open Half
KX101Z	One Piece Liner

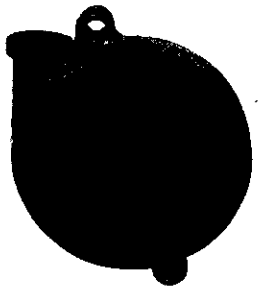

MANUALLY RUBBER LINED CASE

PART #	PART NAME
KX1	Manually Rubber Lined Case (No case gasket required)

GUARDS, FIXTURES AND COUPLINGS

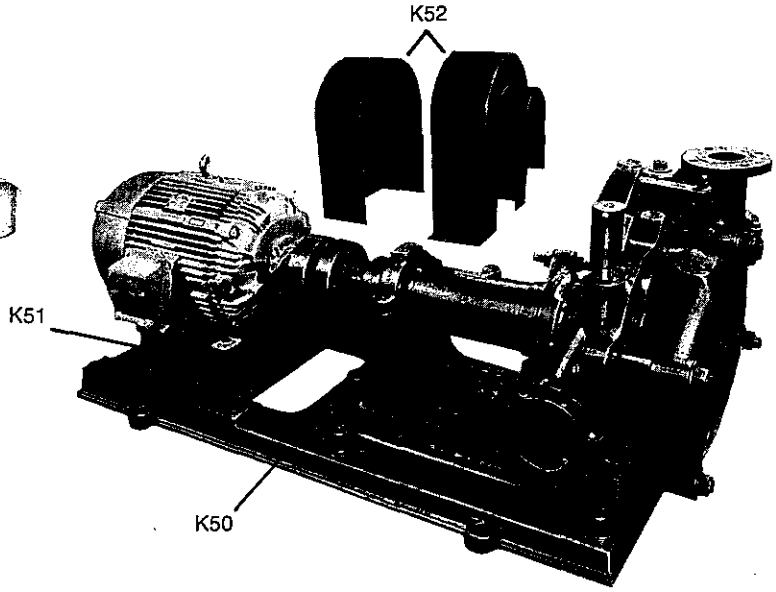

DIRECT DRIVEN PUMP COUPLING GUARD

PART #	PART NAME
K50	Subbase
K51	Motor Pedestal
K52	Coupling Guard
K52A	Coupling Guard Capscrew

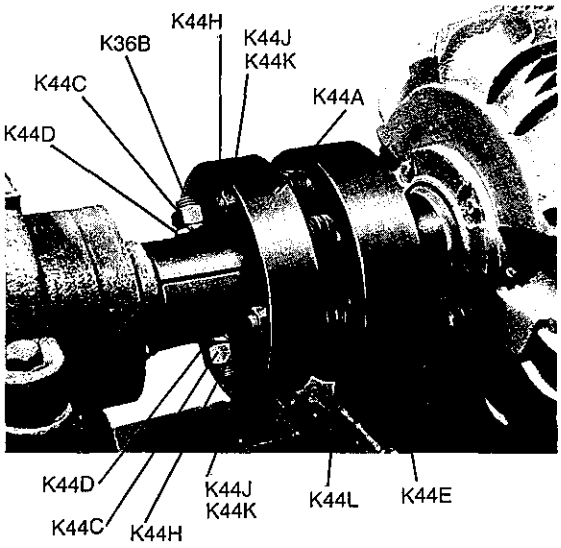

DIRECT DRIVEN PUMP COUPLING (K44).

PART #	PART NAME
K44A	Flexible Coupling Pump Half
K44B	Flexible Coupling Bolt
K44C	Flexible Coupling Bolt Nut
K44D	Flexible Coupling Bolt Lockwasher
K44E	Flexible Coupling Motor Half
K44H	Flexible Coupling Pin
K44J	Flexible Coupling Pin Nut
K44K	Flexible Coupling Pin Lockwasher
K44L	Flexible Coupling Link

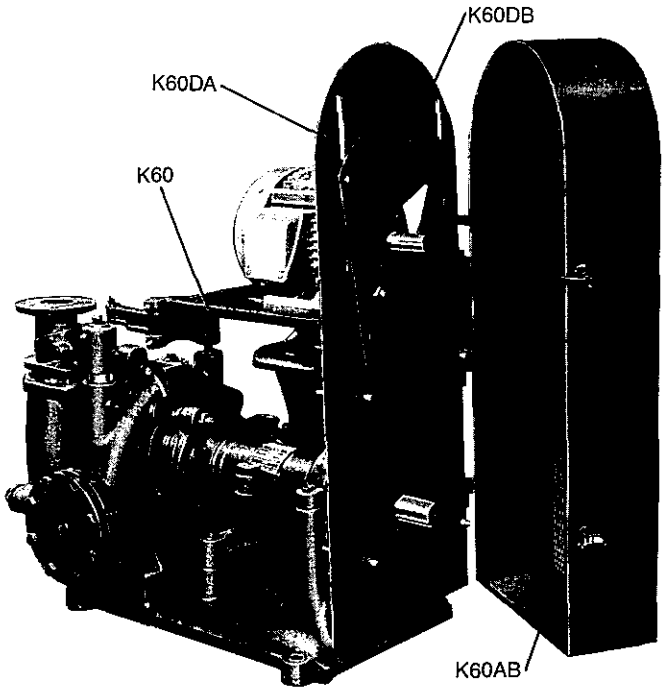

OVERHEAD FIXTURE ASSEMBLY K60 AND DRIVE GUARD ASSEMBLY K60AA

PART #	PART NAME
K60	OVERHEAD FIXTURE ASSEMBLY
K60A	O.H. Fixture Frame (Not Illustrated)
K60B	O.H. Fixture Motor Platform (Not Illustrated)
K60C	O.H. Fixture Fulcrum Bar (Not Illustrated)
K60F	O.H. Fixture Eyebolt Pin (Not Illustrated)
K60H	O.H. Fixture Eyebolt (Not Illustrated)
K60AA	OVERHEAD V-BELT GUARD ASSEMBLY
K60AB	Overhead V-Belt Guard Front Cover
K60DA	Overhead V-Belt Guard Rear Plate
K60DB	Overhead V-Belt Cover Plate

CHECK VALVE ASSEMBLY (K27)

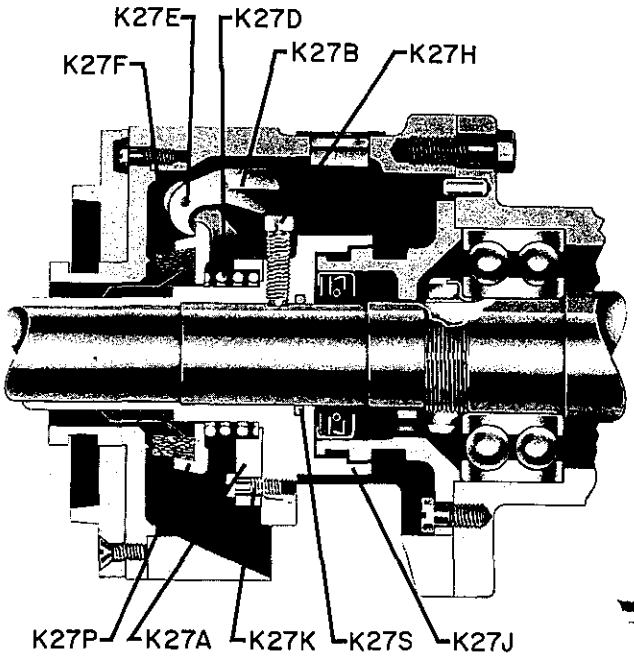

PART #	PART NAME
K27	Check Valve Assembly
K27A	Check Valve Spider
K27B	Check Valve Weight
K27D	Check Valve Spring
K27E	Check Valve Cotter Pin
K27F	Check Valve Packing Diaphragm
K27H	Check Valve Sleeve Setscrew
K27J	Check Valve Sleeve
K27K	Check Valve Spider Machine Screw
K27P	Check Valve Packing Diaphragm Plate
K27S	Check Valve Sleeve O-Ring
K27T	Check Valve Cotter Pin Washer (Not Illustrated)

VARIATION OF CHECK VALVE FOR 1"-2½" PUMPS

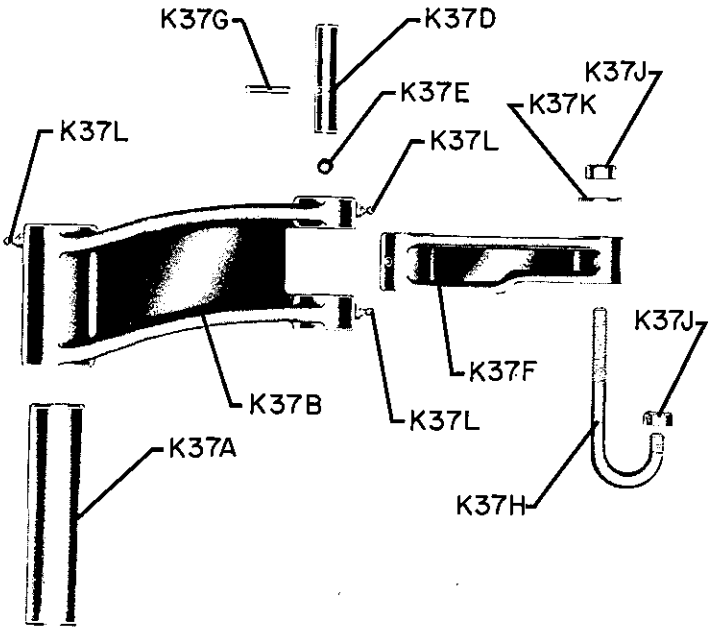

CRANE ASSEMBLY (K37) USED ON 3K THRU 8K ONLY.

PART #	PART NAME
K37A	Crane Pin
K37B	Primary Crane Arm
K37C	Primary Crane Arm Rivet (Not Illustrated)
K37D	Crane Hinge Pin
K37E	Crane Hinge Pin, Ball
K37F	Secondary Crane Arm
K37G	Secondary Crane Arm Pin
K37H	Crane Hook
K37J	Crane Hook Nut
K37K	Crane Hook Washer
K37L	Crane Grease Fitting

Model K Parts List and Sectional View

ew
Plate

Not

THRU

strated)

Part No.	Part Name
K1	Case
K1A	Case Gasket
K1B	Case Discharge Flange Bold
K3	Follower Plate
K3A	Follower Plate Gasket Assembly
K6E	Intake Chamber Capscrew (Not Illustrated)
K6SA	Intake Chamber
K6SB	Frame Base
K6X	Frame Protecting Ring
K7	Gland Ring
K11	Draw Bolt
k11A	Draw Bolt Nut
K11B	Draw Bolt Washer
K14	Thrust Bearing
K15	Shaft
K15A	Shaft Thrust Bearing Locknut
K15B	Shaft Radial Bearing Locknut
K15C	Shaft Thrust Bearing Lockwasher
K15D	Shaft Radial Bearing Lockwasher
K16	Long Cylinder
K16A	Long Cylinder Oil Drain Plug
K16D	Long cylinder Capscrew
K16G	Long Cylinder oil Filler Elbow Assembly
K21	Short Cylinder Head
K21A	Short Cylinder Head Machine Screw
K22	Short Cylinder
K22C	Short Cylinder Cover
K23	End Cap
K23A	End Cap Oil Seal
K23B	End Capscrew
K25	Runner
K25A	Runner Gasket
K25	Die Ring
K25A	Die Ring Machine Screw
K27	Check Valve Assembly
K28	Pedestal Cap
K28E	Pedestal Cap Capscrew (Not Illustrated)
K29	Runner Bolt
K32	Radial Bearing
K33	Discharge Keeper Assembly
K37	Crane Assembly (Not Illustrated)
K39	Case Stud Bolt
K39A	Case Stud Bolt Nut
K39B	Case Stud Bolt Washer
K40	Gland Stud Bolt
K40A	Gland Stud Bolt Nut
K41	Gland Packing Ring
K42	Frame Packing Ring
K55	Front Bearing Cap
K55A	Front Bearing Cap Machine Screw
K55B	Front Bearing Cap Oil Seal
K55C	Front Bearing Cap Indexing Pin

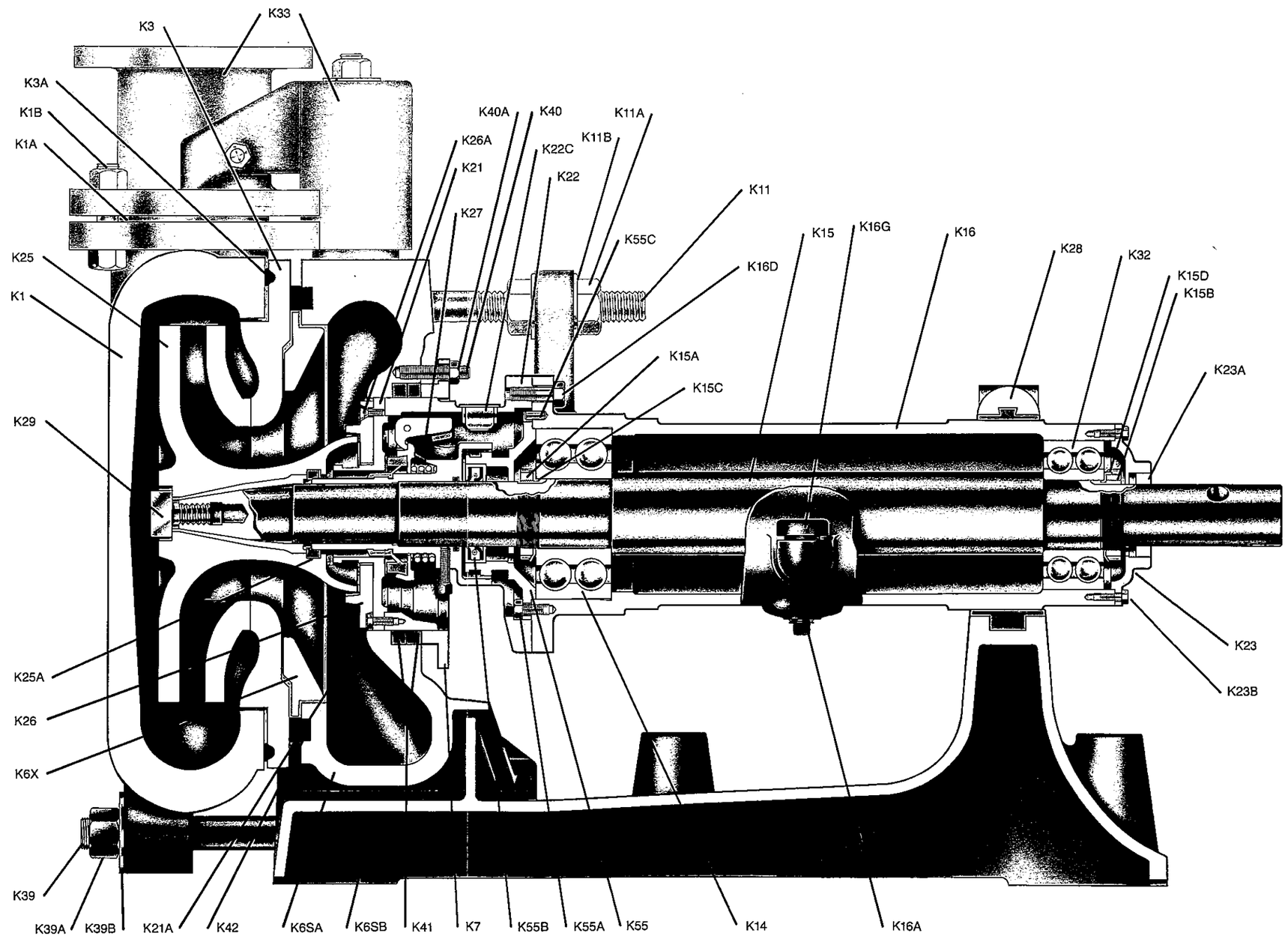

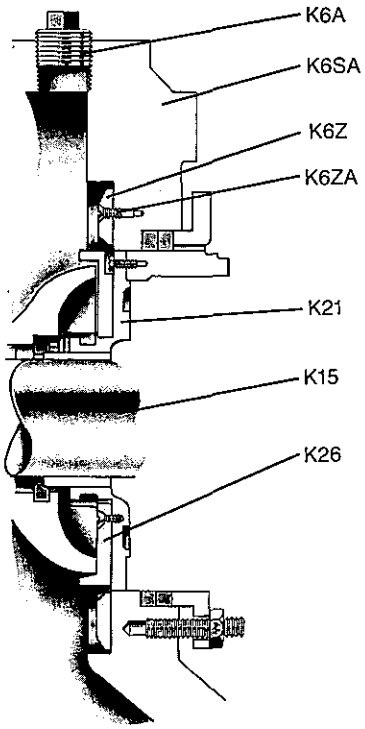

8K ONLY. EXPELLER DEFLECTOR RING. (K 62)

PART #	PART NAME
K6A	Intake Chamber Vent Plug
K6SA	Intake Chamber
K6Z	Expeller Deflector Ring
K6ZA	Expeller Deflector Ring Screws
K15	Shaft
K21	Short Cylinder Head
K26	Die Ring

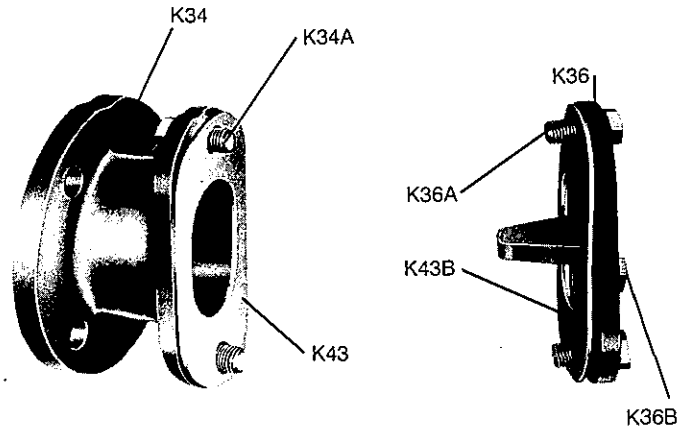

INTAKE SPOOL
(1″ THRU 2½″ PUMPS ONLY)
BLIND FLANGE ON ALL SIZES

PART #	PART NAME
K34	Intake Spool
K34A	Intake Spool Capscrew
K36	Blind Intake Flange
K36A	Blind Intake Flange Capscrew
K36B	Blind Intake Flange Pipe Plug
K43	Intake Spool Gasket
K43B	Blind Intake Flange Gasket

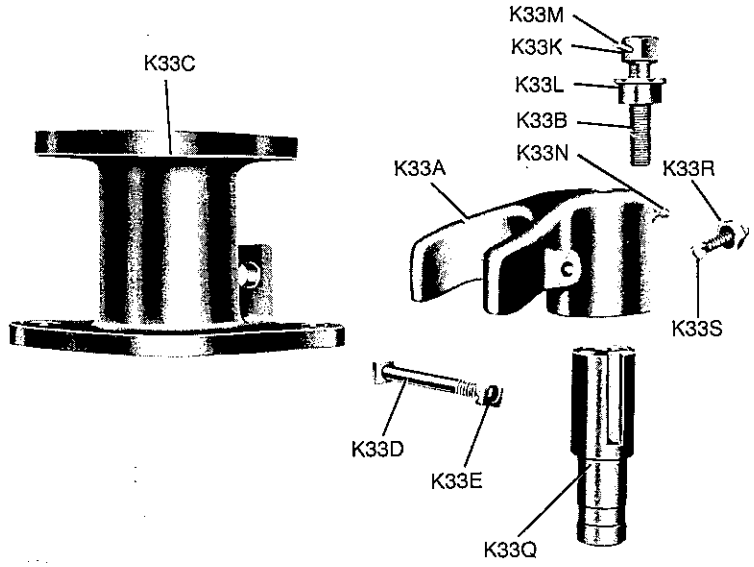

DISCHARGE KEEPER ASSEMBLY (K33) FOR 1K THROUGH 5K ONLY.

PART #	PART NAME
K33A	Discharge Keeper Yoke
K33B	Discharge Keeper Bolt
K33C	Discharge Keeper Sleeve (1K thru 5K)
K33D	Discharge Keeper Sleeve Bolt
K33E	Discharge Keeper Sleeve Bolt Nut
K33K	Discharge Keeper Bolt Nut
K33L	Discharge Keeper Bolt Washer
K33M	Discharge Keeper Bolt Nut Pin
K33N	Discharge Keeper Grease Fitting
K33Q	Discharge Keeper Pin
K33R	Discharge Keeper Yoke Setscrew
K33S	Discharge Keeper Yoke Setscrew Jam Nut
K33T	Discharge Keeper Pin Setscrew (Not Illustrated)
K33U	Discharge Keeper Pin Setscrew Jam Nut (Not Illustrated)

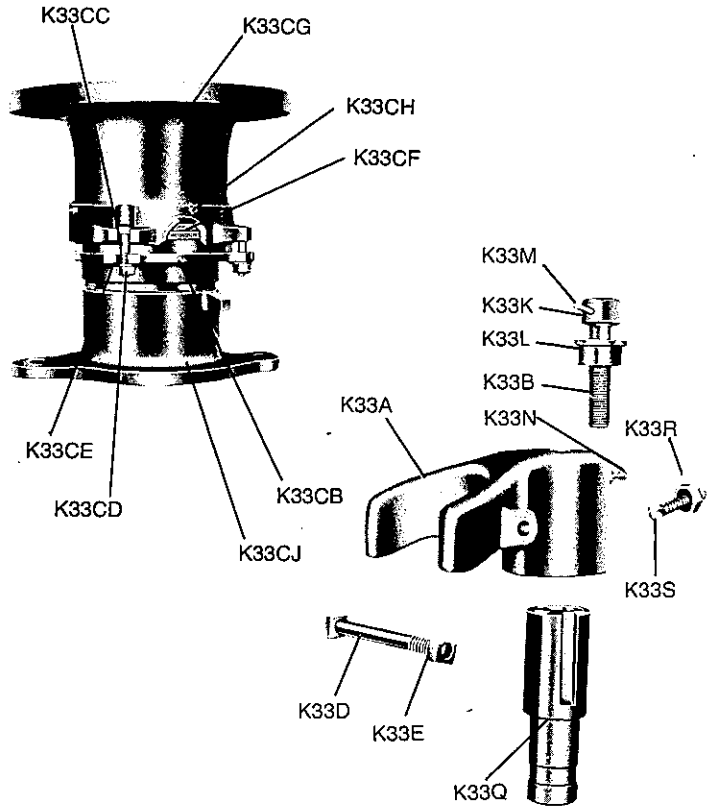

DISCHARGE KEEPER SLIP JOINT ASSEMBLY (K33CA) (YOKE TYPE) 6K and 8K ONLY.

PART #	PART NAME
K33A	Discharge Keeper Yoke
K33B	Discharge Keeper Bolt
K33D	Discharge Keeper Sleeve Bolt
K33E	Discharge Keeper Sleeve Bolt Nut
K33K	Discharge Keeper Bolt Nut
K33L	Discharge Keeper Bolt Washer
K33M	Discharge Keeper Bolt Nut Pin
K33N	Discharge Keeper Grease Fitting
K33Q	Discharge Keeper Pin
K33R	Discharge Keeper Yoke Setscrew
K33S	Discharge Keeper Yoke Setscrew Jam Nut
K33CA	Discharge Keeper Sleeve Slip Joint Assembly (6K Thru 8K).
K33CB	Slip Joint Gland Ring
K33CC	Gland Ring Bolt
K33CD	Gland Ring Bolt Nut
K33CE	Gland Ring Bolt Washer
K33CF	Slip Joint Gland Packing Ring
K33CG	Packing Sleeve
K33CH	Packing Sleeve Grease Fitting
K33CJ	Discharge Sleeve

(Yoke and Discharge Keeper Slip Joint Assembly may be ordered separately)

DISCHARGE KEEPER SLIP JOINT ASSEMBLY (DRAWBOLT TYPE) 6K AND 8K ONLY.

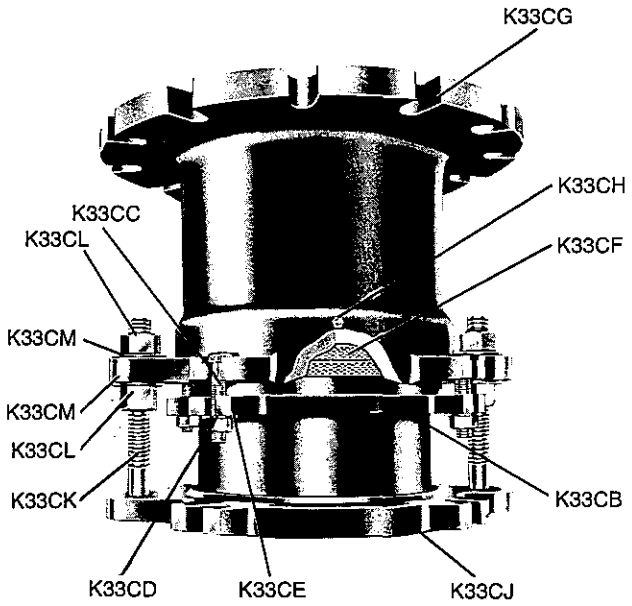

PART #	PART NAME
K33CB	Slip Joint Gland Ring
K33CC	Gland Ring Bolt
K33CD	Gland Ring Bolt Nut
K33CE	Gland Ring Bolt Washer
K33CF	Slip Joint Gland Packing Ring
K33CG	Packing Sleeve
K33CH	Packing Sleeve Grease Fitting
K33CJ	Discharge Sleeve
K33CK	Slip Joint Draw Bolt
K33CL	Slip Joint Draw Bolt Nut
K33CM	Slip Joint Draw Bolt Washer

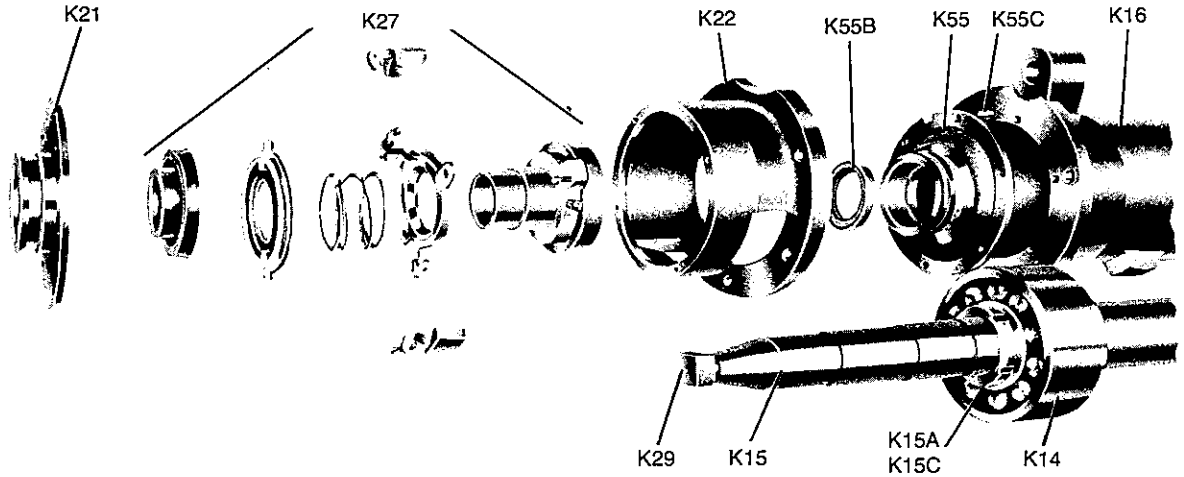

BEARING UNIT ASSEMBLY (K13)

PART #	PART NAME
K14	Thrust Bearing
K15	Shaft
K15A	Shaft Thrust Bearing Nut
K15C	Shaft Thrust Bearing Lockwasher
K16	Long Cylinder
K21	Short Cylinder Head
K22	Short Cylinder
K27	Check Valve Assembly (see assembly)
K29	Runner Bolt
K55	Front Bearing Cap
K55B	Front Bearing Cap Oil Seal
K55C	Front Bearing Cap Indexing Pin
K15B	Radial Bearing Lock Nut (Not Illustrated)
K15D	Radial Bearing Lock Washer (Not Illustrated)
K16A	Long Cylinder Oil Drain Plug (Not Illustrated)
K16D	Long Cylinder Capscrew (Not Illustrated)
K16G	Long Cylinder Oil Filler Assembly (Not Illustrated)
K21A	Short Cylinder Head Bolt (Not Illustrated)
K22C	Short Cylinder Cover (Not Illustrated)
K23	End Cap (Not Illustrated)
K23A	End Cap Oil Seal (Not Illustrated)
K23B	End Cap Capscrew (Not Illustrated)
K32	Radial Bearing (Not Illustrated)
K55A	Front Bearing Cap Bolt (Not Illustrated)

MODEL KBA PUMP (SPECIAL EXPELLER PACKAGE) (KBA 64)

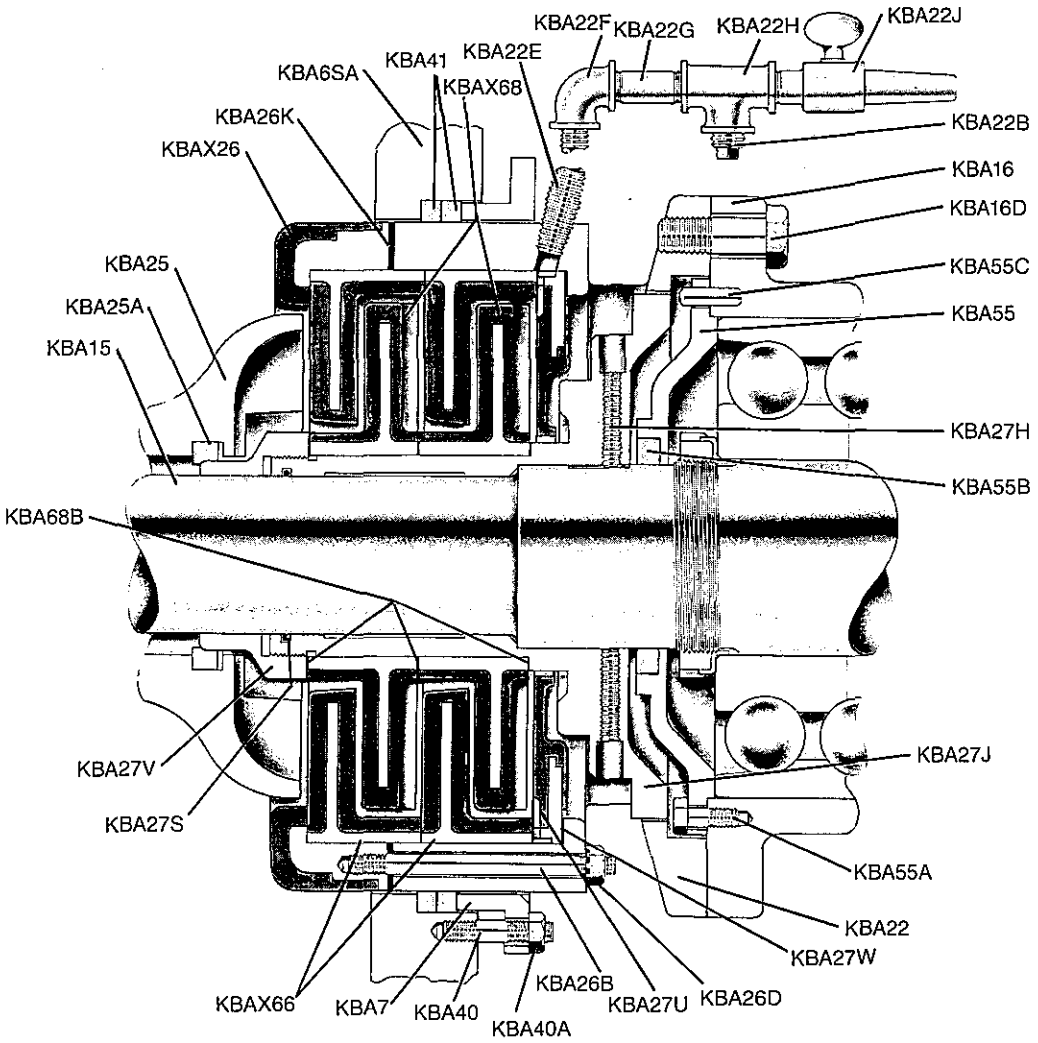

MODEL KBA

PART #	PART NAME
KBA6SA	Intake Chamber
KBA7	Gland Ring
KBA15	Shaft
KBA22	Short Cylinder
KBA22B	Short Cylinder Flushing Plug
KBA22E	Short Cylinder Flushing Close Nipple
KBA22F	Short Cylinder Flushing 90° Elbow
KBA22G	Short Cylinder Flushing Nipple
KBA22H	Short Cylinder Flushing Tee
KBA22J	Short Cylinder Flushing Petcock
KBAX26	Die Ring—Rubber Covered
KBA26B	Die Ring Stud
KBA26D	Die Ring Stud Slotted Angle Hex Nut
KBA26K	Die Ring Gasket
KBA27H	Check Valve Sleeve Socket Setscrew
KBA27J	Check Valve Sleeve
KBA27S	Check Valve Sleeve O-Ring
KBA27U	Check Valve Diaphragm
KBA27U	Check Valve Diaphragm
KBA27V	Check Valve Sleeve Nut
KBA27W	Check Valve Gasket
KBA40	Gland Stud Bolt
KBA40A	Gland Stud Bolt Nut
KBA41	Gland Packing Ring
KBA55	Front Bearing Cap
KBA55B	Front Bearing Cap Oil Seal
KBAX66	Expeller Ring Spacer—Rubber Covered
KBAX68	Expeller Plate—Rubber Covered
KBA68B	Expeller Plate Gasket
	STANDARD ON "K" MODEL
KBA16	Long Cylinder
KBA16D	Long Cylinder Capscrew
KBA25	Runner
KBA25A	Runner Gasket
KBA55A	Front Bearing Cap Machine Screw
KBA55C	Front Bearing Cap Indexing Pin

KBA PUMP ASSEMBLY PROCEDURE

Note: Before assembly, coat all mating surfaces with an anti-rust, anti-galling compound.

A. Expeller Unit Assembly

1. Install assembly of Front Bearing Cap (KBA55) and Front Bearing Cap Oil Seal (KBA55B) on Long Cylinder (KBA16) (with Shaft and Bearings in place) over Front Bearing Cap Indexing Pin (KBA55C) and secure with the Front Bearing Cap Machine Screws (KBA55A). Note: The mating surfaces between the Front Bearing Cap and Long Cylinder should be coated with a gasket sealer before assembly.)
2. Install Check Valve Sleeve O-ring (KBA27S) in Check Valve Sleeve (KBA27J).
3. Slide Check Valve Sleeve (KBA27J) along Shaft (KBA15) until Sleeve is shouldered on corresponding shaft shoulder and align one Check Valve Sleeve Socket Setscrew with notch on Shaft. Tighten (2) Check Valve Sleeve Socket Setscrews (KBA27H) with standard hex socket key.
4. Position Short Cylinder (KBA22) on Long Cylinder (KBA16) and secure with (5) Long Cylinder Capscrews (KBA16D).
5. Place Check Valve Gasket (KBA27W) inside Short Cylinder (KBA22) against the shoulder.
6. Slide Check Valve Diaphragm (KBA27U) into Short Cylinder (KBA22) against Check Valve Gasket (KBA27W) with flat side of Check Valve Diaphragm (KBA27U) away from Check Valve Gasket (KBA27W).
7. Slide Expeller Plate Gasket (KBA68B) No. 1 onto Check Valve Sleeve (KBA27J) against Sleeve shoulder.
8. Push first Expeller Plate (KBAX68) onto Check Valve Sleeve (KBA27J) against Expeller Plate Gasket (KBA68B) No. 1 with pumping blades adjacent to Check Valve Diaphragm (KBA27U).
9. Install first Expeller Ring Spacer (KBAX66) into Short Cylinder (KBA2) against Check Valve Diaphragm (KBA27U) and covering Expeller Plate (KBAX68). The hub of the Expeller Plate should extend slightly beyond the exposed face of the Expeller Ring Spacer.
10. Slide Expeller Plate Gasket (KBA68B) No. 2 onto Check Valve Sleeve (KBA27J) and against exposed hub face of first Expeller Plate (KBAX68).
11. Install second Expeller Plate (KBAX68) and second Expeller Ring Spacer (KBAX66) in position with same orientation as first parts.
12. Place Expeller Plate Gasket (KBA68B) No. 3 on Check Valve Sleeve (KBA27J) against exposed hub face of second Expeller Plate (KBAX68).
13. With threads of Check Valve Sleeve (KBA27J) and Check Valve Sleeve Nut (KBA27V) amply coated with anti-galling compound, install Check Valve Sleeve Nut (KBA27V) onto Check Valve Sleeve (KBA27J) and tighten snuggly against Expeller Plate Gasket (KBA68B) No. 3 with strap wrench.
14. With (4) Die Ring Studs (KBA26B) installed in Die Ring (KBAX26), with threads bottomed in Die Ring, coat (4) Die Ring Studs with grease and place Die Ring Gasket (KBA26K) on each stud and metal face of Die Ring.
15. Push Die Ring Stud assembly into (4) holes in Short Cylinder (KBA22) and over second Expeller Ring Spacer (KBAX66). Mount Die Ring Stud Nuts (KBA26D) on Die Ring Stud ends protruding into respective Short Cylinder openings. Tightening the Die Ring Stud Nuts firmly on the Die Ring Studs clamps all internal parts into position.

    All parts should now be in their proper positions and relationships and the Shaft should turn easily by hand with no observable dragging of parts within the assembly.

B. Pump Assembly

1. Bolt the Intake Chamber (KBA6SA) firmly to the pump base. Install standard Case Stud Bolts (KBA39), Discharge Keeper Assembly (KBA33) and Discharge Keeper Pin Setscrew (KBA33T).
2. Install the Gland Ring Packing (KBA41) in the groove of the Intake Chamber and slide the Gland Ring (KBA7) over the studs. Finger tighten nuts to retain in position.
3. Slide the modified KBA bearing unit to the Intake Chamber and position as with a standard pump. Attach Pedestal Cap (KBA28) in normal manner.
4. Install Runner (KBA25), Follower Plate (KBA3) and Case (KBA1) in normal manner, and adjust seals for proper operation. Snug up Gland Ring Nuts for leak-proof operation.

C. Disassembly

Disassembly is accomplished primarily by reversal of procedure described in Section A. It must be emphasized that disassembly after unit has been in operation is accomplished more easily if ample coating of parts with anti-galling compound is done at original and subsequent assembly of unit.

Recommended Spare Parts List (KBA Components)

Item	Description	Quantity
KBA26K	Die Ring Gasket	1
KBAX26	Die Ring—Rubber Covered	1
KBA27S	Check Valve Sleeve O-Ring	1
KBA27U	Check Valve Diaphragm	1
KBA27W	Check Valve Gasket	1
KBAX66	Expeller Ring Spacer—Rubber Covered	2
KBAX68	Expeller Plate—Rubber Covered	2
KBA68B	Expeller Plate Gasket	3

KBA EXPELLER AND CHECK VALVE UNITS

FUNCTION AND OPERATION

This unit is, in general, similar in function to the previous KB unit in that it is capable of holding more intake head than the conventional K pump system which has only the single stage bell expeller.

Beyond the above similarities, the KBA units have different design concepts and capabilities as follows:

1. Parts exposed to slurry are covered with rubber to a depth of approximately twice that of a previous unit.
2. There is no key alignment requirement.
3. The Check Valve Sleeve incorporates a slinger area, at its outside diameter, which throws off any slurry which may be present and prevents bearing contamination.
4. The Check Valve System is based on a molded Diaphragm which operates with slurry pressure at shut down. When pump is running, the Diaphragm is at rest with atmospheric pressure on both sides and has no running contact with any pump part. At shut down, intake and, or, discharge head pressure pushes the Diaphragm against the seal area of the Check Valve Sleeve and a seal is accomplished.
5. Flushing capability is provided to the rear Expeller stage. This allows periodic flushing by applying plant water pressure to ¼" plumbing, which is provided with each unit. Passages for flushing water are provided through a hole in the Short Cylinder and through slots and grooves in the Check Valve Diaphragm Assembly.
6. Note: The flushing system is also used to purge air from the remote Expeller areas at start up. When slurry is first introduced to the pump it is necessary to open the flushing pumping petcock until slurry emerges following the blowing off of air from the pump and Expeller cavities.

   The purging of air from the unit is necessary in that air which is trapped will mix with slurry and reduce the actual specific gravity of the slurry in the Expeller cavities and thus reduces the system's head holding capacity, causing it to leak while running.

   It is highly recommended that, prior to reassembling the KBA unit, all mating surfaces be coated with an effective anti-rust or anti-galling compound to insure ease of disassembly at some future date.

   After removal from Long Cylinder, total disassembly of the KBA unit is accomplished by backing off of the two Check Valve Sleeve Setscrews, removal of the Die Ring Stud Nuts (KBA26D) and the removal of the Check Valve Sleeve Nut (right hand thread).

INSTALLATION PROCEDURE FOR KBA PACKAGE EXPELLER UNIT

1. Slide unit on Shaft until Short Cylinder face engages Long Cylinder face and install Long Cylinder Capscrew (KBA16D).
2. Push Expeller and Check Valve Sleeve Assembly toward Long Cylinder in order to position Check Valve Sleeve shoulder against pump Shaft shoulder. This establishes correct clearance relationships.
3. With operation 2 in effect, tighten the Check Valve Sleeve Socket Setscrews (KBA27H) in Check Valve Sleeve (slinger portion) finger tight with standard socket key. One setscrew must be located at flat on pump Shaft.
4. Proceed to tighten setscrews alternately in 2 or 3 steps, this will prevent the possibility of forcing the slinger out of concentricity with the Short Cylinder.
5. Install remaining pump parts as usual.
6. Check unit for freedom of rotation.
7. Reverse procedure (1-4) for disassembly.

***THESE PARTS CAN BE PURCHASED AS AN ASSEMBLED PACKAGE UNIT**

*KBA22	KBA27H	KBA27V
KBAX26	KBA27J	KBA27W
KBA26B	KBA27S	KBAX66
KBA26D	KBA27U	KBAX68
KBA26K		KBAX68B

MODEL KH PUMP (WETTED-END)

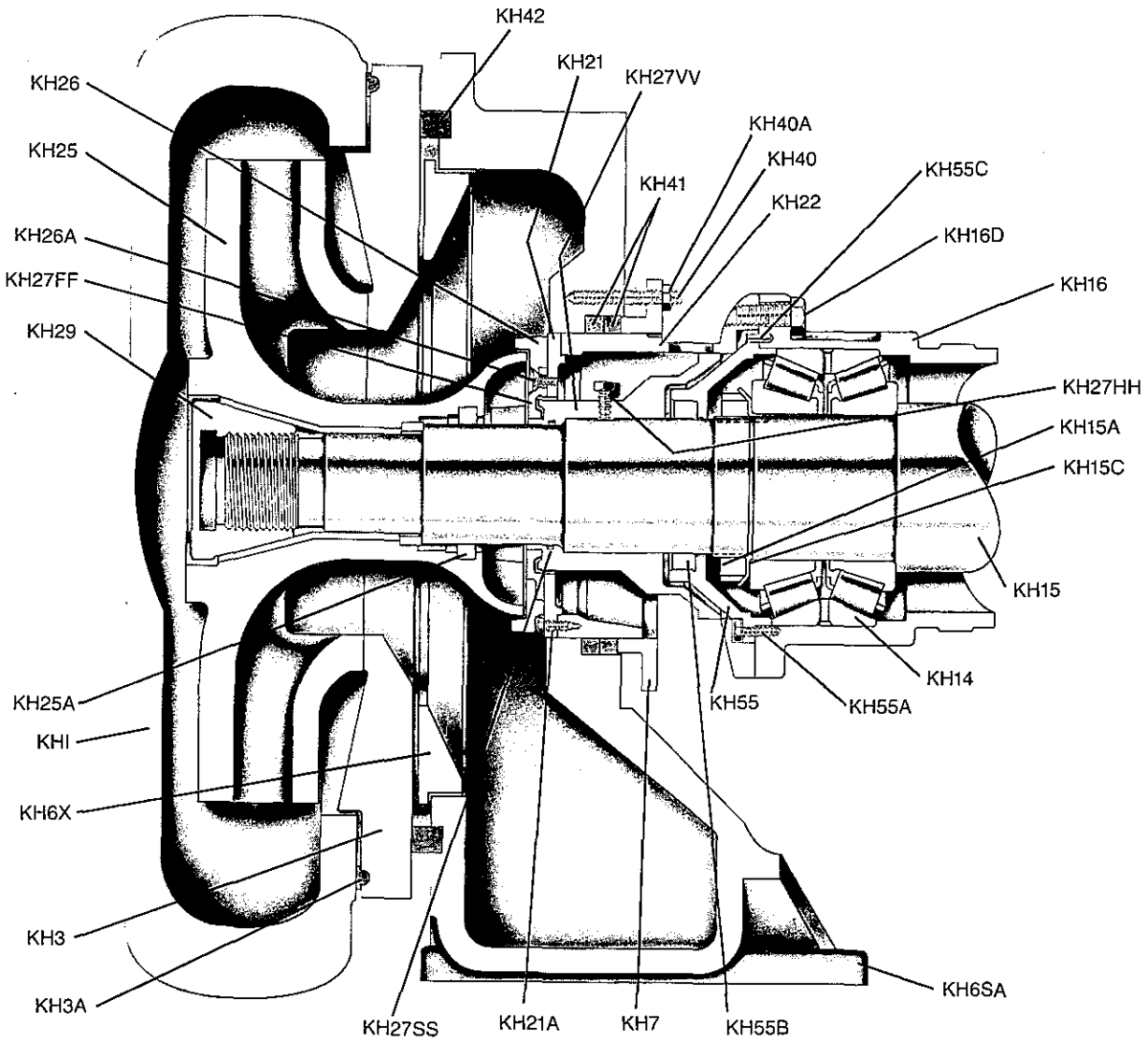

PART #	PART NAME
KH1	Case
KH3	Follower Plate
KH3A	Follower Plate Gasket Assembly
KH6SA	Intake Chamber
KH6SB	Frame Base (Not Illustrated)
KH6X	Frame Protecting Ring
KH7	Gland Ring
KH14	Thrust Bearing
KH15	Shaft
KH15A	Shaft Thrust Bearing Nut
KH15C	Shaft Thrust Bearing Lockwasher
KH16	Long Cylinder
KH16D	Long Cylinder Capscrew
KH21	Short Cylinder Head
KH21A	Short Cylinder Head Machine Screw
KH22	Short Cylinder
KH25	Runner
KH25A	Runner Gasket
KH26	Die Ring
KH26A	Die Ring Machine Screw
KH27FF	Check Valve Diaphragm
KH27HH	Check Valve Hub Setscrew
KH27SS	Check Valve Hub O Ring
KH27VV	Check Valve Hub
KH29	Runner Bolt
KH40	Gland Stud Bolt
KH40A	Gland Stud Bolt Nut
KH41	Gland Packing Ring
KH42	Frame Packing Ring
KH55	Front Bearing Cap
KH55A	Front Bearing Cap Machine Screw
KH55B	Front Bearing Cap Oil Seal
KH55C	Front Bearing Cap Indexing Pin

MODEL K CORROSION AND ABRASION RESISTANT PUMP (WETTED-END)

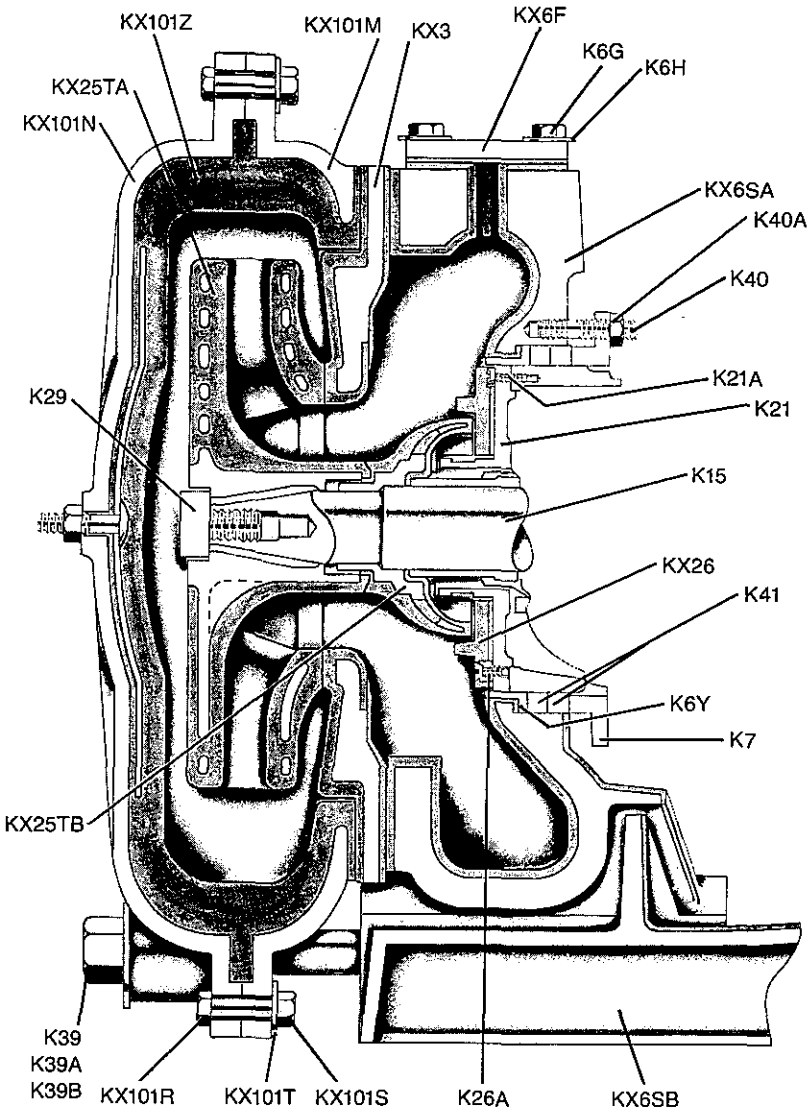

PART #	PART NAME
KX3	Rubber Covered Follower Plate
KX6F	Rubber Covered Intake Chamber Vent Cover
K6G	Intake Chamber Vent Cover Capscrew
K6H	Intake Chamber Vent Cover Washer
KX6SA	Rubber Lined Intake Chamber
KX6SB	Rubber Covered Frame Base
K6Y	Short Cylinder Protecting Ring
K7	Gland Ring
K15	Shaft
K21	Short Cylinder Head
K21A	Short Cylinder Head Machine Screw
KX25TA	Rubber Runner
KX25TB	Rubber Expeller
KX26	Rubber Covered Die Ring
K26A	Die Ring Machine Screw
K29	Runner Bolt
K39	Case Stud Bolt
K39A	Case Stud Bolt Nut
K39B	Case Stud Bolt Washer
K40	Gland Stud Bolt
K40A	Gland Stud Bolt Nut
K41	Gland Packing Ring
KX101M	Case Shell-Open Half
KX101N	Case Shell-Closed Half
KX101R	Case Shell Bolt
KX101S	Case Shell Bolt Nut
KX101T	Case Shell Bolt Washer
KX101Z	One Piece-Rubber Lined Case

TROUBLE SHOOTING GUIDE

PROBLEM	POSSIBLE CAUSE	SOLUTION
A. Low Capacity	1. Pump Intake not flooded.	1. Pump must have positive intake head. Does not have suction characteristics.
	2. Runner/Follower Plate slippage seal clearance is too great, which causes recirculation resulting in loss of discharge head and capacity. Incorrect slippage seal clearance is indicated when horsepower does not reduce at lower capacities.	1. Adjust slippage seal clearance. Metal wetted parts can be adjusted while pump is running. For rubber wetted parts, pump must be stopped. See Instruction Number 2, page 5.
	3. Wetted parts worn excessively.	1. Check pump Runner and Follower Plate Seals for excessive wear. Replace parts if 1/16″ to 1/8″ slippage seal clearance cannot be achieved or hole is worn through runner shrouds or body of Follower Plate.
	4. Pump speed too low.	1. Check V-Belts for slippage due to improper belt tension. Adjust to proper tension.
	5. Improper pump Runner diameter.	1. Check pump Runner specification to insure Runner is proper size as recommended by Wilfley for the pumping conditions.
	6. Clogged intake or discharge piping.	1. Flush piping.
	7. Increase in viscosity of slurry resulting in increased friction loss in pump and piping.	1. Reduce viscosity to original pumping conditions. 2. Contact Wilfley Engineering Department to re-evaluate pump for change in viscosity.
	8. Nature of pumped solution to froth or foam.	1. Add defoamers. 2. Contact Wilfley Engineering Department for recommendations of larger pump size to handle froth/foam conditions.
B. Pump leaks while running.	1. Intake head on pump is too great for expeller (pump) speed.	1. Throttle intake to pump to originally designed intake head conditions. 2. Contact Wilfley Engineering Department to recheck pump speed. With speed increase, Runner diameter may have to be changed to smaller diameter to maintain original pump capacity.
	2. Clearance between Die Ring and Expeller faces increase due to wear. Clearance should be 3/32″ maximum.	1. Replace worn pump Runner/Expeller or Die Ring or both.
	3. Worn Short Cylinder Head.	1. Replace Short Cylinder Head if hole is worn through face of part.
	4. Leakage through Short Cylinder Gland Ring Packing.	1. Tighten Gland Ring Nuts. 2. Check for worn Gland Packing Ring and wear on Short Cylinder seal face for Gland Packing Ring. Replace worn parts.
	5. Bent pump Shaft causing Runner/Expeller misalignment with Die Ring.	1. Replace pump Shaft.

PROBLEM	POSSIBLE CAUSE	SOLUTION
C. Pump leaks when shut down.	1. Check Valve Inoperative because of clogging with solids.	1. Disassemble Check Valve Assembly and clean thoroughly. 2. Install water flushing line in Short Cylinder into Check Valve area. Some applications require continuous water supply.
	2. Check Valve Packing Diaphragm may be torn or incorrectly installed.	1. Replace torn Check Valve Packing Diaphragm. 2. Insure that Check Valve Packing Diaphragm is properly seated in Check Valve Packing Diaphragm Plate.
	3. Excessive intake head on pump can overcome Check Valve Spring pressure causing leakage at shutdown.	1. Reduce intake head to original design operating condition.
D. Pump vibration while running.	1. Pump Runner out of balance by wear.	1. Replace pump Runner.
	2. Loose Pedestal Cap Screws.	1. Tighten screws.
	3. Loose Gland Stud Bolt Nuts.	1. Tighten nuts.
	4. Rubbing contact between Runner and Follower Plate slippage seals.	1. Adjust Draw Bolt to eliminate rubbing contact of seals. See instruction number 2, page 5.
	5. Out of balance condition due to bent pump Shaft.	1. Replace pump Shaft.
E. Excessive wear on wetted parts.	1. Pump speed too high resulting in increased fluid velocity.	1. Pump may be too small for application. Contact Wilfley Engineering Department for verification of operating conditions versus pump size.
	2. Intake head to pump may be too high resulting in increased fluid velocity.	1. Throttle intake to pump to original operating conditions.
	3. Type of material used in wetted parts unable to withstand the abrasion of the pumping application.	1. Consult Wilfley Engineering Department to select a more abrasion resistant material for the wetted parts.
F. Pump surges.	1. Pump may be overspeeded resulting in widely fluctuating intake head to cause surging.	1. Consult Wilfley Engineering Department for recommendations to reduce pump speed.
	2. Widely fluctuating feed flow into pump sump tank.	1. Stabilize feed flow into pump sump tank.
G. Air binding.	1. Frothing condition of pumped fluid.	1. Use defoamer. 2. Consult Wilfley Engineering Department. Larger pump may be required to handle increased volume due to froth condition.
	2. Air trapped in Intake Chamber.	1. Install standpipe vent in boss provided on top of Intake Chamber.

PROBLEM	POSSIBLE CAUSE	SOLUTION
H. Bearing failure.	1. Contamination of bearings.	1. Check and replace Front Bearing Cap Oil Seal if defective. 2. Replace pump shaft when oil seal journal is scored sufficiently to cause damage to oil seal lip.
	2. Improper lubrication of bearings.	1. Use only bearing lubricants recommended by A. R. Wilfley & Sons or bearing manufacturer. Use 300 second viscosity turbine oil or SAE/20 nondetergent motor oil. 2. Maintain proper oil level in Long Cylinder. Recommended oil level is 1/4" above inside surface of Oil Filler Elbow in Long Cylinder. Avoid excess use of lubricant.
	3. Excessive load on Radial (Rear) Bearing.	1. Check and adjust V-belts to proper tension on V-belt driven pumps. 2. Check alignment of Drive Coupling on Direct Driven pumps.
I. Runner Bolt Failure	1. Improper match of tapers on Shaft and Runner bore.	1. Insure Runner and Shaft taper fit tightly without perceptible "rocking." Shaft taper and taper in Runner bore must be free of raised "nicks."
	2. Runner Bolt not torqued properly on Shaft.	1. Runner Bold must draw Runner tight on Shaft taper during installation of Runner.
J. Runner failure.	1. Improper handling of brittle abrasion resistant parts.	1. Avoid careless handling of brittle pump parts during storage and pump assembly.
	2. Tramp material entering pump.	1. Install screening devices to eliminate tramp material from entering pump sump tank. Screen maintenance is important to detect and eliminate holes worn in the screen.
	3. Failure of babbitted taper in Runner bore.	1. Avoid "jogging" start and stop buttons on pump. This procedure induces high compressive stresses on babbitt. 2. Consult Wilfley Engineering Department for availability of higher hot strength babbitt when pumped solution temperatures exceed 150°F.
K. Pump Case and Follower Plate failure due to fracture.	1. Uneven torquing of Case Stud Bolt Nuts.	1. Tighten opposite nuts alternately a small amount at a time until equal torquing is achieved.
	2. Pump Case improperly aligned with Follower Plate.	1. During installation of pump Case insure that sealing face of Case is parallel to sealing face of Follower Plate and Follower Plate Gasket before tightening Case Stud Bolt Nuts.

WILFLEY

Service Record

Serial Number:

Frame Size:

Model:

Application:

GPM:

Max. Suction Head–Ft.:

Head–Ft.:

Date:	Repair and Replacement

Date:	Repair and Replacement

Wilfley
Centrifugal Pumps
K Assembly Guide

WILFLEY

Wilfley Centrifugal Pumps

Model K 3 Inch, Metal (Two-Piece Runner)

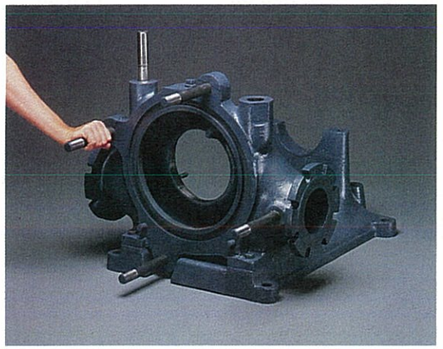

1. Attach Intake Chamber to the Frame Base and install the Case Stud Bolts.

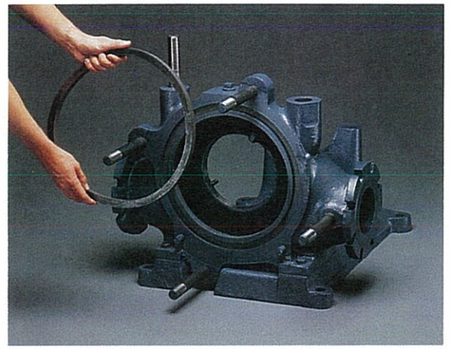

2. Insert the Frame Packing Ring into the groove on the front face of the Intake Chamber.

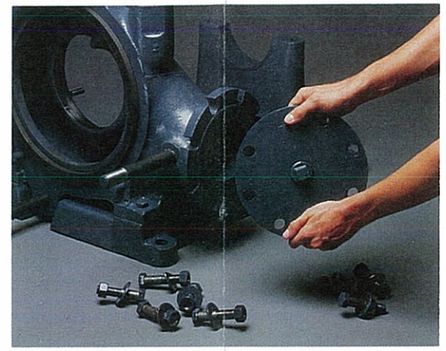

3. Bolt the Blind Intake Flange onto the Intake Chamber. Note: Wilfley Model K pumps will accept intake from either, or both sides of the pump.

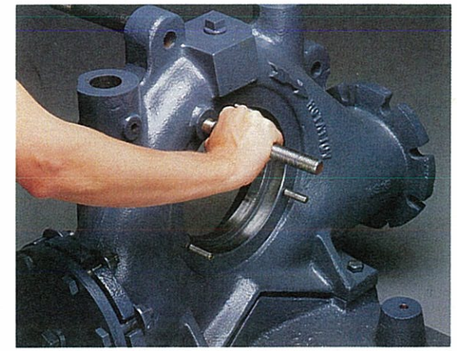

4. Install Gland Stud Bolts and the Draw Bolt on the back of the Intake Chamber.

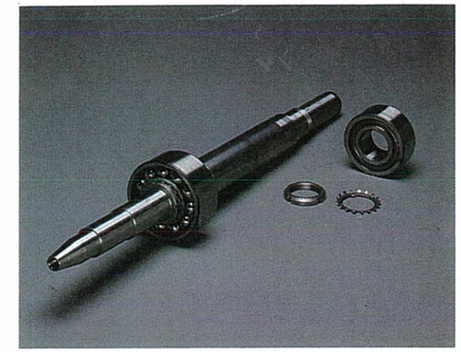

5. Heat Bearings and slide them onto the Bearing Shoulders on the Shaft. Lock into place with Lock Nuts and Lock Washers.

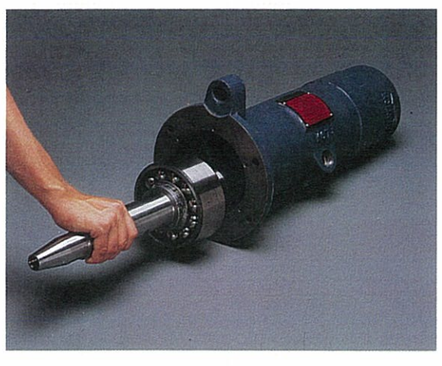

6. Install Shaft and Bearing Assembly into the Long Cylinder.

7. Place Oil Seals into the Front and Rear Bearing Caps and attach to the Long Cylinder. Note: Front Oil Seal is designed to keep impurities from reaching the bearings. Mount Seal with spring forward.

8. Attach Short Cylinder to the Long Cylinder. Note: Dished edge of the Short Cylinder must line up with the Draw Bolt Fitting on the Long Cylinder.

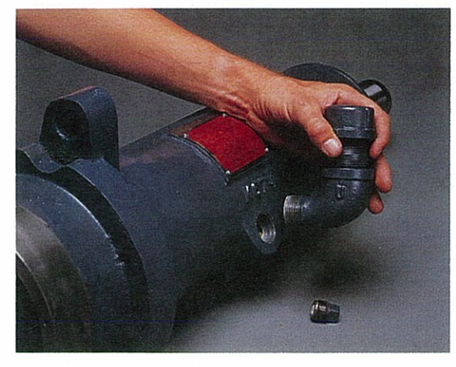

9. Install the Oil Filler Elbow Assembly and the Oil Drain Plug on the Long Cylinder.

10. Place the Check Valve Spring into the Check Valve Spider and cover it with the Check Valve Packing Diaphragm Plate.

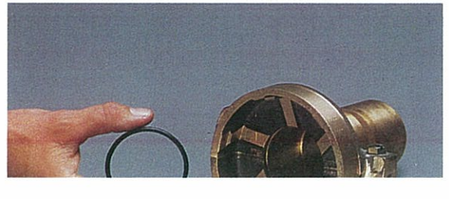

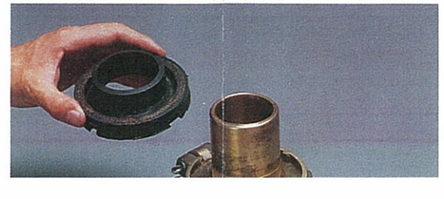

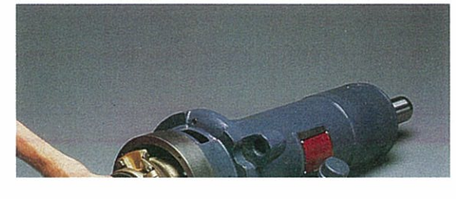

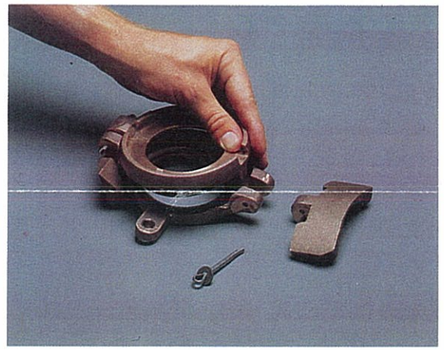

11. Compress the Check Valve Packing Diaphragm Plate and attach the Check Valve Weights with the cotter pins and washers.

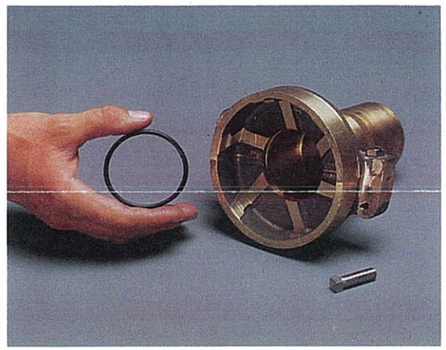

12. Install the Check Valve Setscrews and the Check Valve Sleeve O-Ring on the Check Valve Sleeve.

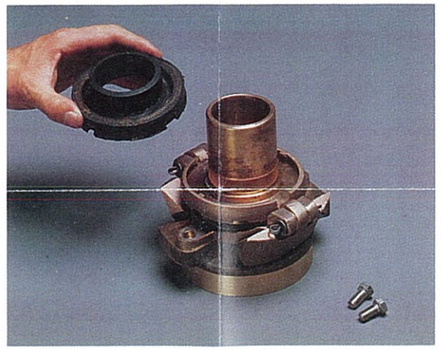

13. Slide the Check Valve Spider Assembly onto the Check Valve Sleeve, secure with screws. Position the Check Valve Packing Diaphragm on the Check Valve Packing Diaphragm Plate.

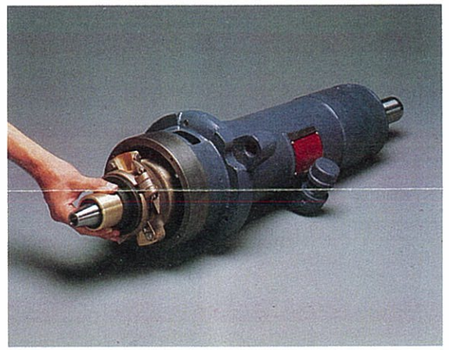

14. Slide the Check Valve Assembly onto the Shaft and tighten the Setscrew in the notch on the Shaft.

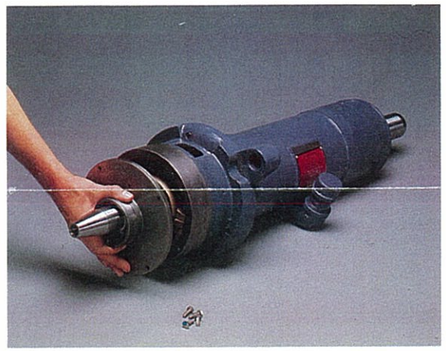

15. Attach Short Cylinder Head to Short Cylinder and secure with screws.

16. Place Gland Ring over the Short Cylinder.

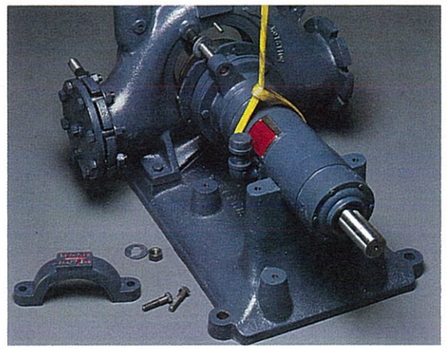

17. Install Bearing Unit in rear bore of Intake Chamber. Attach Pedestal Cap and Draw Bolt Nut and Washer. Do not tighten at this time.

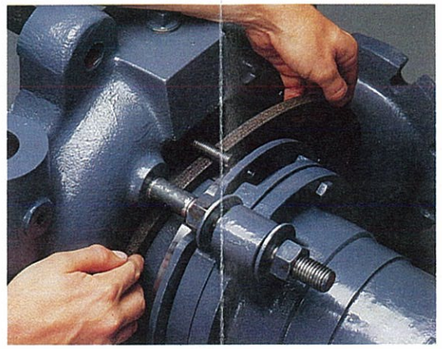

18. Install two layers of Gland Packing Ring into rear bore of the Intake Chamber and bolt the Gland Ring to the Intake Chamber. Attach Short Cylinder Cover. Do not tighten at this time.

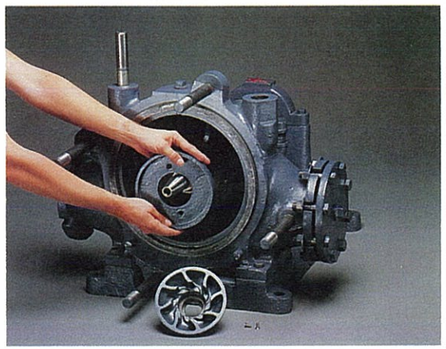

19. Install Die Ring and secure with screws. The Expeller portion of two-piece runners must be installed at this time.

20. Install Frame Protecting Ring, Follower Plate and Follower Plate Gasket into Front Bore of Intake Chamber.

21. Slide Expeller O-Ring Runner onto the Shaft and secure with Runner Bolt. (Expeller O-Ring for two-piece Runner only.) Note: C-Clamp may be useful in holding the Follower Plate in position.

22. Attach Case and secure with washers and nuts.

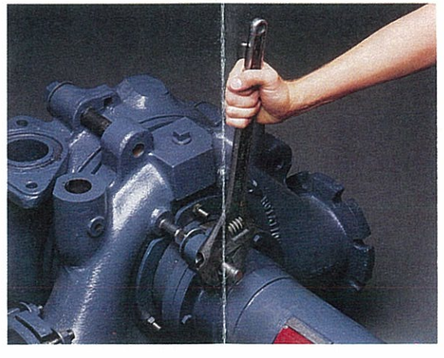

23. Set Runner Clearance. For specific instructions refer to page 5 of the Model K Operating Handbook. Tighten Pedestal Cap and Gland Stud Nuts.

24. Attach Crane Arm Assembly.

25. Attach Discharge Keeper Assembly.

A. R. Wilfley & Sons, Inc.

This pictorial guide is to be used only

Please refer to exceptions as noted in the

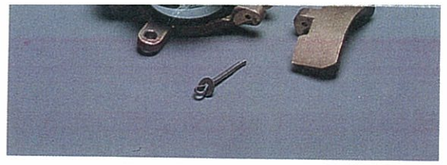

11. Compress the Check Valve Packing Diaphragm Plate and attach the Check Valve Weights with the cotter pins and washers.

12. Install the Check Valve Setscrews and the Check Valve Sleeve O-Ring on the Check Valve Sleeve.

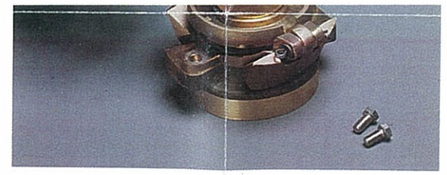

13. Slide the Check Valve Spider Assembly onto the Check Valve Sleeve, secure with screws. Position the Check Valve Packing Diaphragm on the Check Valve Packing Diaphragm Plate.

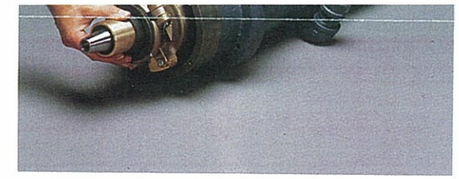

14. Slide the Check Valve Assembly onto the Shaft and tighten the Setscrew in the notch on the Shaft.

15. Attach Short Cylinder Head to Short Cylinder and secure with screws.

16. Place Gland Ring over the Short Cylinder.

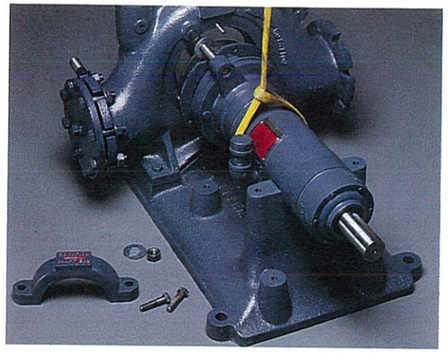

17. Install Bearing Unit in rear bore of Intake Chamber. Attach Pedestal Cap and Draw Bolt Nut and Washer. Do not tighten at this time.

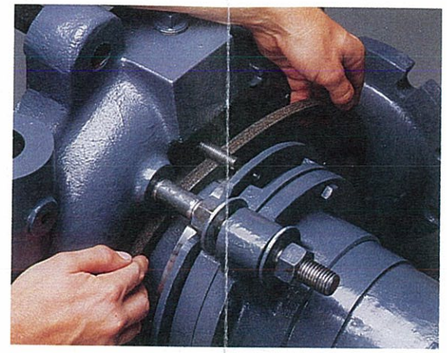

18. Install two layers of Gland Packing Ring into rear bore of the Intake Chamber and bolt the Gland Ring to the Intake Chamber. Attach Short Cylinder Cover. Do not tighten at this time.

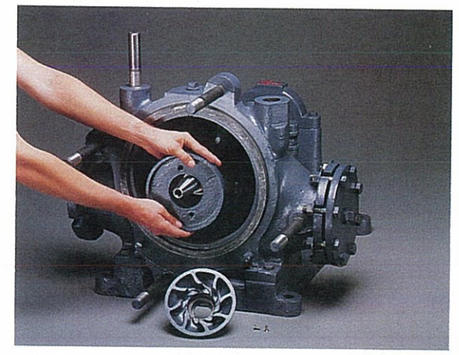

19. Install Die Ring and secure with screws. The Expeller portion of two-piece runners must be installed at this time.

20. Install Frame Protecting Ring, Follower Plate and Follower Plate Gasket into Front Bore of Intake Chamber.

21. Slide Expeller O-Ring Runner onto the Shaft and secure with Runner Bolt. (Expeller O-Ring for two-piece Runner only.) Note: C-Clamp may be useful in holding the Follower Plate in position.

22. Attach Case and secure with washers and nuts.

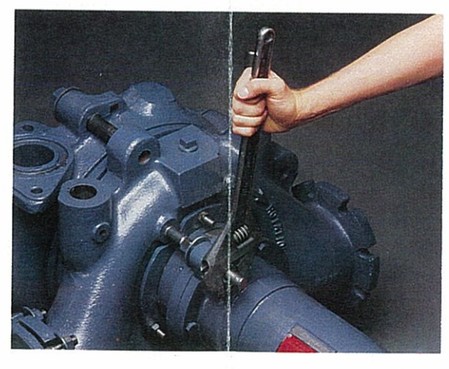

23. Set Runner Clearance. For specific instructions refer to page 5 of the Model K Operating Handbook. Tighten Pedestal Cap and Gland Stud Nuts.

24. Attach Crane Arm Assembly.

25. Attach Discharge Keeper Assembly.

WILFLEY

A. R. Wilfley & Sons, Inc.
P.O. Box 2330
Denver, Colorado 80201
303/779-1777

This pictorial guide is to be used only as a general reference in relation to the K Operating Handbook. The photos in this guide relate to the 3 inch metal K pumps. Parts may not be exactly the same for pumps of other sizes or materials.

Please refer to exceptions as noted in the K Operating Handbook. Before working on your pump, please read all instructions and warnings carefully, and observe all safety precautions.

A.R. Wilfley & Sons, Inc./P.O. Box 2330/Denver, Colorado 80201/1-303-779-1777
Telex 054-543 FAX # 303-779-1277

KO6

Milton Roy Company mROY Controlled Volume Pump

PO 0083

ID 07-3917

INSTRUCTION MANUAL

mROY®

CONTROLLED VOLUME PUMP

102-9856-999A

FLOW CONTROL TECHNOLOGY

MILTON ROY COMPANY

FLOW CONTROL DIVISION

TABLE OF CONTENTS

Section		Page
	List of Illustrations	ii
	Introduction	iii
	Warranty	iv
	Parts Ordering Instructions	v
1.	General Description	1
2.	Installation Instructions	3
3.	Operating Instructions	13
4.	Maintenance Instructions	19
5.	Disassembly and Parts Replacement	21
6.	Trouble Shooting Chart	29
Appendix		
	Capacity vs Pressure Table	33
	Parts Drawing Identification	34
	Parts Drawings	

LIST OF ILLUSTRATIONS

Figure		Page
1.	Capacity Adjustment	1
2.	Mounting Bolt Holes	3
3	Oil Level Mark	4
4	Back Pressure Spring Installation - Metallic Pumps	6
5	Back Pressure Spring Installation - Plastic Pump	7
6	Oil Passage	8
7	Plastic Plug	9
8	Relief Valve Adjustment	9
9	Checking Relief Valve	10
10	By-Pass Port Open	13
11	By-Pass Port Closed	14
12	Oil Drain Plug	21
13	Motor Housing Removal	21
14	Washers in Top of Motor Housing	22
15	Teflon Spiral Back-Up Ring	23
16	O-Ring Installation	23
17	Removing Diaphragm Head Bolts	24
18	Removing Diaphragm	24
19	Removing "E" Ring	25
20	Capacity Control Set Screw Adjustment	26
21	Control Spool Removal	27
22	Control Spool Installation	27

INTRODUCTION

The mRoy pump is a highly reliable controlled volume pump of diaphragm design.

Pump capacity is adjustable while the pump is running. Capacity adjustment can be made manually or automatically by signal from remote process control instruments.

Repetitive accuracy of the metered discharge volume is maintained within a plus or minus 1% range at constant conditions of pressure, temperature and pump capacity adjustment setting.

WARRANTY

The Milton Roy Company guarantees this device against defects in workmanship or material under use and service for a period of one year from date of receipt by its customer. All obligations and liabilities under this guarantee are limited to repairing or replacing, at our option, F.O.B. our plant, of such allegedly defective units as are returned, carrier charges prepaid. All repairs or replacements are made subject to factory inspection of returned parts at company plant. No liability is accepted for consequential damages or reinstallation labor.

Defects as defined in the above paragraph shall not include decomposition by chemical action (corrosion).

Guarantee on equipment and accessories furnished by outside manufacturers shall be limited to the guarantee of the respective equipment and/or accessory manufacturer for such units.

The Milton Roy Company will not assume responsibility for contingent liability through alleged failure or failures of any of its products or their accessories.

PARTS ORDERING INSTRUCTIONS

Note—For prompt entry of orders for this pump, your order must include both model number and serial number.

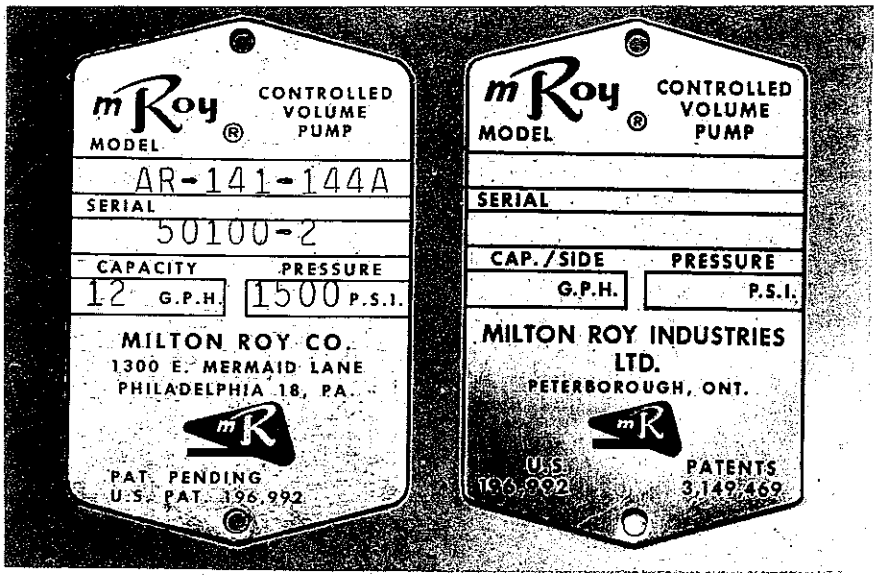

Send all orders or inquiries for parts to:

Parts Department
Milton Roy Company
201 Ivyland Road
Ivyland, Pa. 18974

or contact your local Milton Roy office

In Canada, send orders or inquiries for parts to:

Milton Roy Industries, Ltd.,
The Kingsway
Peterborough, Ont.

SECTION 1
GENERAL DESCRIPTION

The mRoy pump is a reliable, compact, controlled volume diaphragm pump for normal corrosive or toxic chemicals and light slurries with viscosities up to 200 S.S.U. (40 cps).

The repetitive accuracy of the metered discharge volume is maintained within a plus or minus 1% range at constant conditions of pressure, temperature and pump capacity adjustment setting.

A plunger, reciprocating at a fixed stroke, displaces a fixed volume of hydraulic fluid which actuates a flexible, chemically inert Teflon diaphragm to create pumping action. Double ball check valves are used on the suction and discharge to insure consistent metering accuracy. Capacity control is established by adjusting the volume of hydraulic fluid which bypasses the diaphragm cavity (See figure 1).

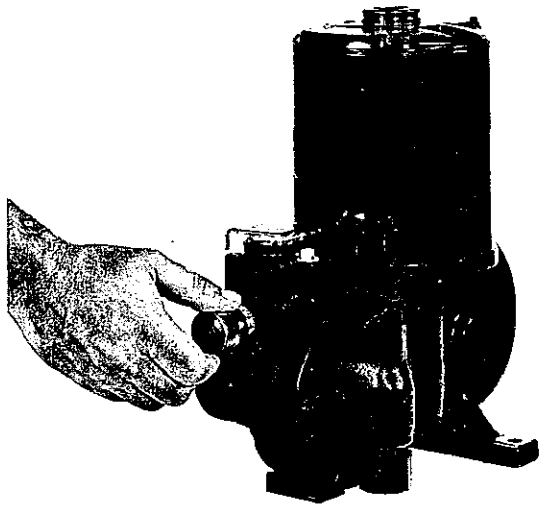

Figure 1

Metering with repetitive accuracy is possible only if the volume of the hydraulic oil in the displacement chamber is maintained constant for each stroke. This is accomplished by mechanically opening the displacement chamber to the oil reservoir for a short period at the end of every suction stroke and the beginning of each pressure stroke. During this period air or vapor is bled from the system, lost oil is replenished, and allowances are made for the expansion or contraction of the oil due to temperature change.

For a detailed description of the principles of operation refer to Section 3.

SECTION 2
INSTALLATION INSTRUCTIONS

2.0 GENERAL

2.0.1 Increased reliability can be expected if pump locations are avoided which are subjected to high ambient temperatures (above 100°F) with poor free-air circulation over the pump assembly.

2.0.2 The mRoy pump can be mounted on any surface which is flat and level for the support feet. Three mounting bolt holes are provided in the support feet for use when the pump is to be firmly anchored to a base surface (See figure 2).

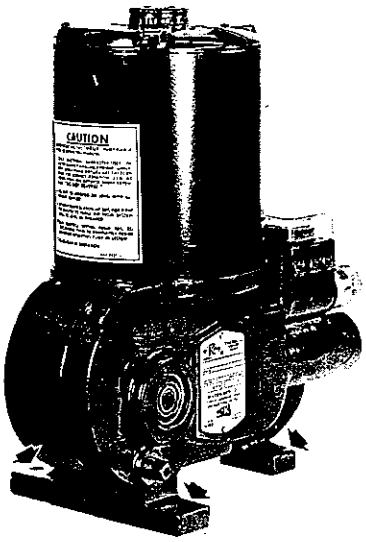

Figure 2

2.0.3 Support all piping connections to the pump so that no stress is placed on pump fittings. In no case should the piping be sprung to make the connections to the pump. The suction and discharge cartridge pipe connections can be positioned within an arc of approximately 150° to facilitate piping to pump. Refer to Operating Instructions Section 3 for description of adjustment procedures.

2.0.4 Flush and blow out all pipelines before connecting the pump. This eliminates any foreign matter which might seriously damage the internal working parts of the liquid end.

2.0.5 Install an Anderson Y-type strainer, or equal, which is sized to remove foreign particles with minimum pressure drop in the suction line of the pump.

2.0.6 Install shut-off valves, with unions on the pump side of the valves, in the suction and discharge lines to facilitate servicing.

2.0.7 Use extreme care in piping to plastic liquid end pumps with rigid pipe such as PVC. If excessive stresses or vibration is unavoidable, flexible connections are recommended.

2.0.8 Check to be sure that the electrical supply matches the pump motor nameplate electrical characteristics. Motor rotation must be CCW (counter clock-wise) when viewed from the top end of the motor.

CAUTION

On single-phase pump motors the rotation will be determined at the factory and must not be changed. On three-phase pump motors the rotation must be determined at the time of installation and prior to start-up. Operation with the wrong rotation will damage the pump and motor and void the warranty.

2.0.9 Oil is supplied for the average installation (ambient temperature above 50°F). See recommendation below for lower temperature. Fill pump and gear box by slowly pouring the proper oil thru the air bleed reservoir opening until the oil level in the reservoir is level with oil level mark on outside surface of reservoir (See figure 3).

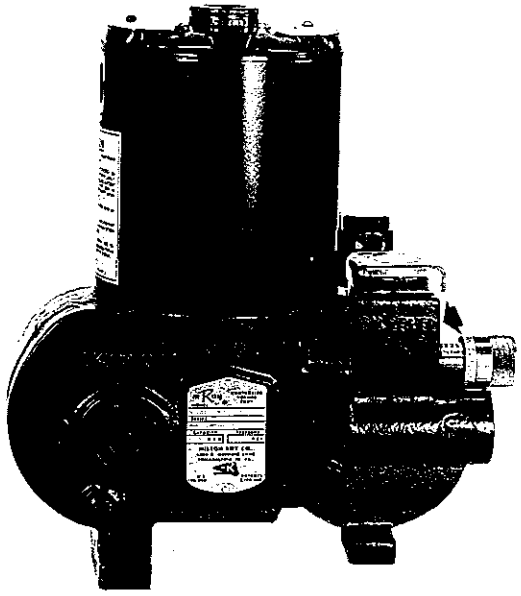

Figure 3

CAUTION

DO NOT OVERFILL as motor damage can result.

Examples of Commercial Oils. Any Equivalent is acceptable.	Ambient Temperature 15°—50° F	Ambient Temperature Above 50° F
Standard Oil Co.	Mobil Compound A.A.	Mobil Compound B.B.
Texas Co.	Meropa No. 1	Meropa No. 2
Zurn Oil Co.	No. EP 35	No. EP 95
AGMA SPEC.	AGMA—No. 2 EP	AGMA—No. 5 EP

2.1 SUCTION PIPING

2.1.1 The suction piping must be absolutely tight. After installation, test suction piping with air pressure and soap solution for leaks.

2.1.2 A flooded suction is recommended for optimum service life and maintenance-free operation. However, the mRoy pump can operate with less than flooded suction if necessary, in accordance with the following schedule:

Frame	Model	Min NPSH (PSIA)	or Lift (Ft. H O)
A	R*-100-R113	10	10
A	R-200-R213	10	10
A	R-120-R123	10	10
A	R-220-R223	10	10
A	R-130-R133	10	10
A	R-230-R233	10	10
B	R-140-R144	12.5	5
B	R-240-R244	12.5	5
B	R-150-R154	12.5	5
B	R-250-R254	12.5	5
B	R-160-R164	14.0	2
B	R-160-R264	14.0	2

*Series R and Series FR have same suction characteristics.

Refer to Operating Instructions Section 3 outlining limiting conditions if suction lift requirements are anticipated.

2.1.3 The suction tank should incorporate a low level switch to cut off the pump motor circuit before the suction intake is exposed to air. Otherwise, the pump may occasionally run dry, *which is detrimental to the pump. Prolonged operation against a dry system can cause permanent damage to the pump and significantly reduce the normal service life.*

2.2 DISCHARGE PIPING

2.2.1 For satisfactory metering and capacity control, the discharge pressure at the pump must be 50-70 PSIG minimum. Therefore, when the pump is to discharge into an open system, a back-pressure device must be installed in

the pump discharge cartridge or line. A spring is attached to each pump in a small cloth bag for installation in the discharge cartridge to develop the required back pressure on the pump if a separate back pressure valve is not used.

2.2.2 BACK PRESSURE SPRING INSTALLATION INSTRUCTIONS–METALLIC PUMP (See figure 4).

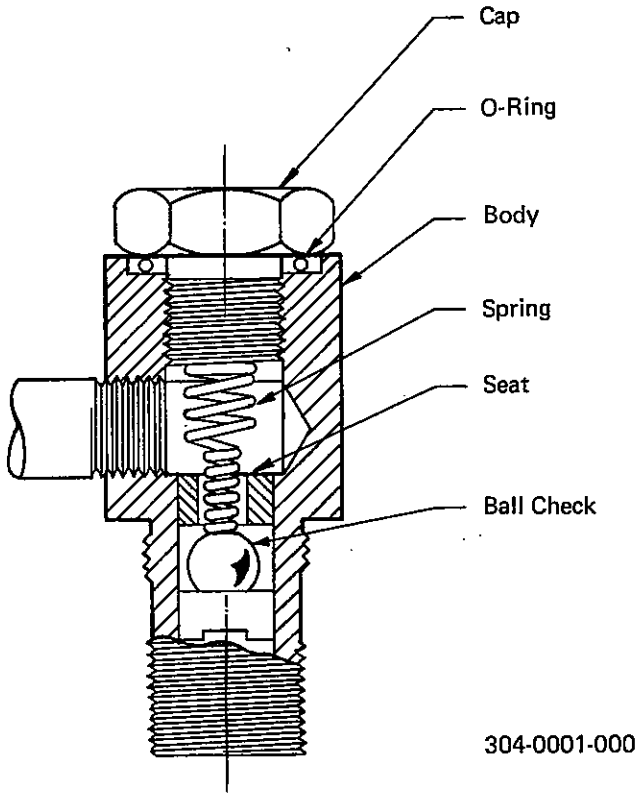

Figure 4

The spring is to be installed when the mRoy pump will be discharging into an open tank or other system where discharge back pressure is less than 50 PSIG. Installation of this spring will assure repetitive metering accuracy under these conditions.

After pump has been fully primed, remove the cap from the body and insert spring thru the top seat to rest on top of the ball check. Replace cap and tighten until firmly seated on body. **Do not over-tighten,** as O-ring provides the seal.

Do **not** insert spring in discharge ball cartridge on remote submerged head assemblies. A separate back pressure valve must be installed in the discharge line from the remote head cartridge.

CAUTION

Take care when inserting the discharge pipe nipple into the ball check cartridge. Nipple should not extend into cavity, causing clamping of the spring and retarding normal operation.

2.2.3 BACK PRESSURE SPRING INSTALLATION INSTRUCTIONS—PLASTIC PUMP (See figure 5).

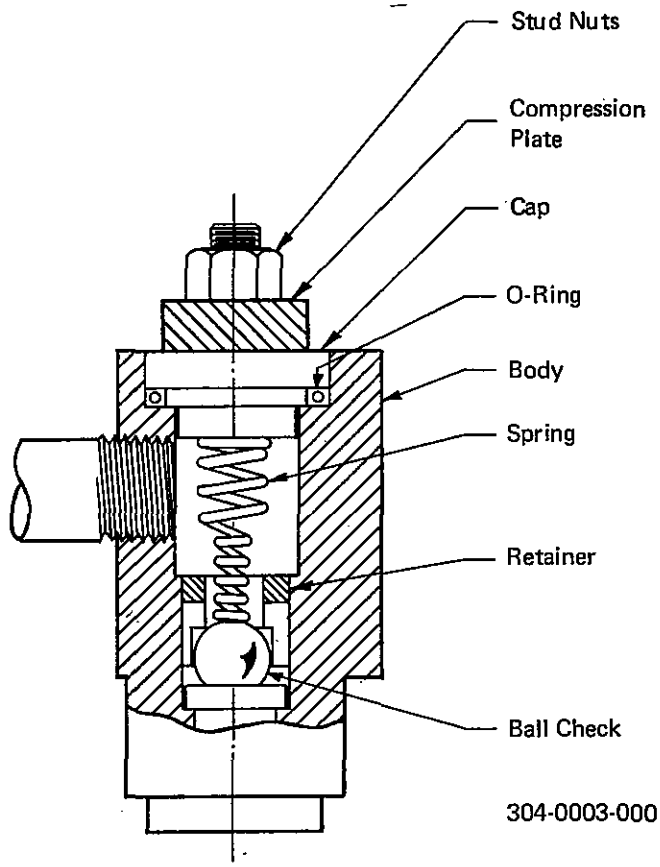

Figure 5

The spring is to be installed when the mRoy pump will be discharging into an open tank or other system where discharge back pressure is less than 50 PSIG. Installation of this spring will assure repetitive metering accuracy under these conditions.

After pump has been fully primed, loosen stud nuts, remove cap from the body and insert spring through retainer to rest on top of the ball check. Replace cap and tighten stud nuts until compression plate is firmly seated on body. **Do not over-tighten,** as the "O" ring provides the seal.

Do not insert spring in discharge ball cartridge on remote submerged head assemblies. A separate back pressure valve must be installed in the discharge line from the remote head cartridge.

CAUTION

Take care when inserting the discharge pipe nipple into the ball check cartridge. Nipple should not extend into cavity, causing clamping of the spring and retarding normal operation.

2.3 RELIEF VALVE RESETTING

The mRoy pump incorporates an internal relief valve which is pre-set at the factory to relieve when the hydraulic fluid pressure exceeds 100 PSI.

Refer to the parts drawings for a pictorial description of the mechanism.

Examination of these drawings will reveal a small passage connecting the oil side of the diaphragm head cavity with the oil reservoir (See figure 6). This passage is stopped off by a poppet (Part 212-C) which is held in place by a spring (Part 280-A) secured by a set screw (Part 405-E). Part 405H is a plastic screw plug which keeps the adjusting threads free of dirt and also acts to prevent oil seepage from the reservoir, under relieving conditions.

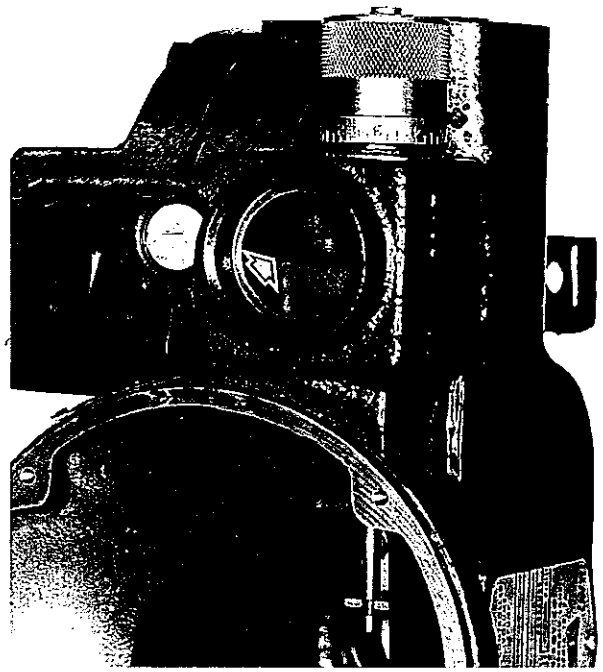

Figure 6

In operation, the spring-loaded poppet is held against the seat in the housing until the pressure in the oil side of the diaphragm cavity exceeds the pressure for which the valve has been set. When this occurs, the poppet is forced off its seat permitting the oil to flow from the diaphragm cavity through the mechanical passage to an opening in the side of the oil reservoir. The resilient material of the poppet permits the relief valve to actuate without erosion of the poppet or seat surface.

Although the relief valves are adjusted at the factory for 100 PSI, they can be readjusted as required for up to the maximum rated pressure of the pump. This can be done as follows:

2.3.1 **Relief valve setting instruction** (with pump at operational pressure and capacity set at 95%):

(1) Remove yellow plastic plug located at top of pump next to the oil fill hole (See figure 7).

(2) Using a 3/16 Hex. key, or a wide blade screw driver as required for the different models, turn the adjusting screw clockwise to increase cracking pressure until pump ceases to by-pass through the relief valve at the desired working pressure (See figure 8).

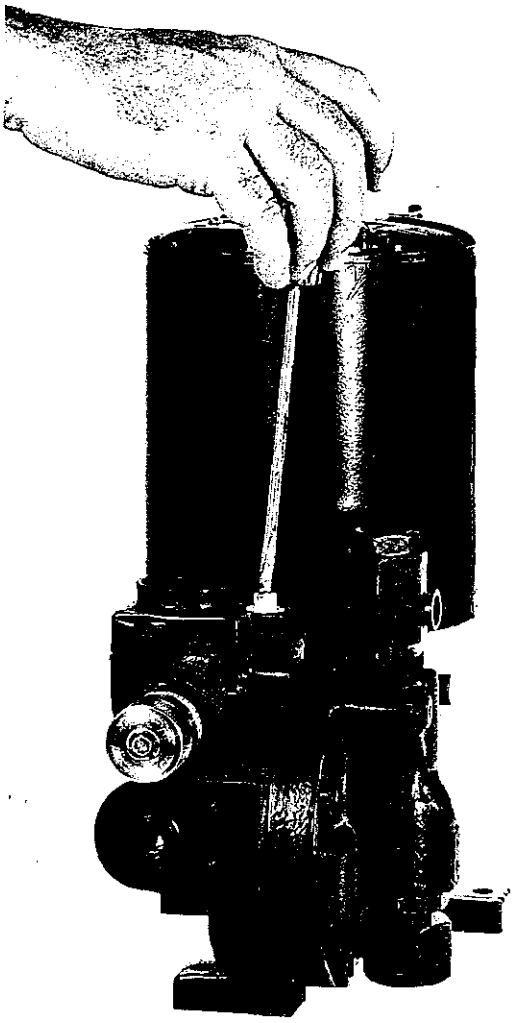

Figure 7

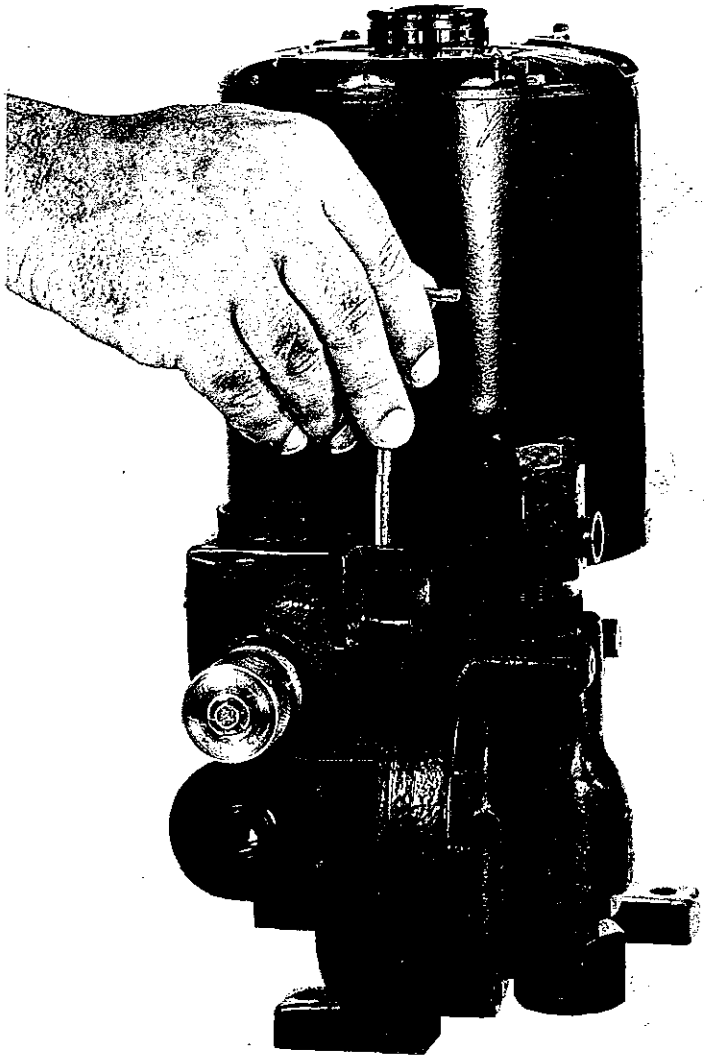

Figure 8

When relieving has stopped, adjust the screw to one full turn beyond this point. To determine if relieving is taking place, insert your index finger into the oil reservoir opening and place it against the by-pass opening where the oil pulse from the relief valve can be determined (See figure 9).

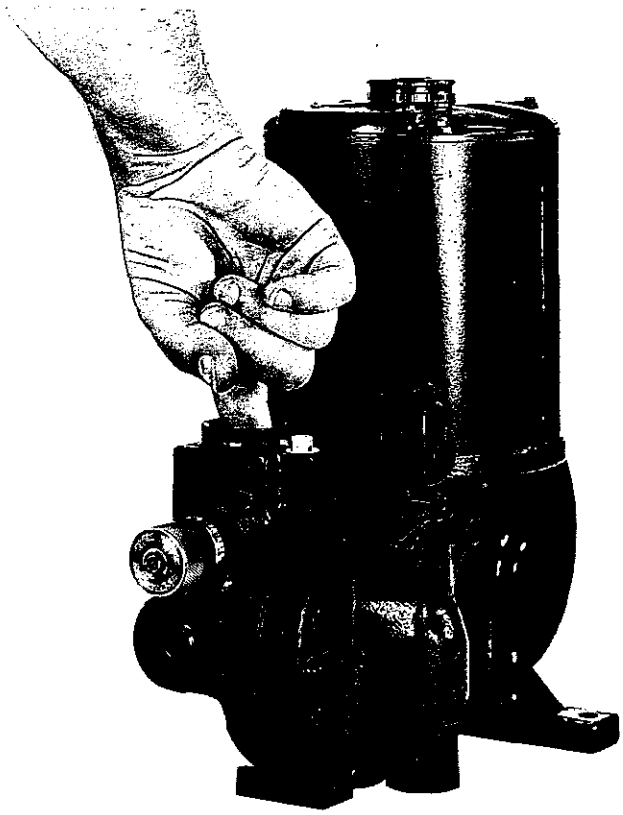

Figure 9

(3) Reinstall the plastic screw plug.

If the pump is allowed to operate for long periods with the relief valve relieving, there is a possibility that the poppet will become so eroded that it prevents operating pressure from being attained. If this happens, remove the plastic plug, set screw and spring. The poppet may be removed by "jogging" the motor causing oil flow through the relief port to float the poppet up and out of the threaded hole, or use a tweezer.

To replace the poppet, temporarily "glue" the poppet into the end of the spring with thick grease, then drop this assembly into place in the threaded hole. Install the set screw until the spring is lightly compressed. (The point at which this happens can be determined by simple measurements). If the pump is now filled to the proper oil level and the motor started, any air bubbles will be allowed to clear and the relief valve may be adjusted for the desired working pressure, as previously described.

CAUTION

When relieving is taking place, especially on pumps with the larger plunger sizes, oil may be ejected at high velocity from the bypass port. Normal precaution should be observed to prevent this from splashing the surrounding area.

This relief is intended primarily for pump protection in the event that the discharge or suction system is blocked while the pump is in operation. If the pump is the only source of pressure in the reagent system, the hydraulic system relief valve in the pump will also protect the reagent system. If there are other sources of pressure in the reagent system, a high grade chemical type relief valve should be installed in the pump discharge line as close to the pump as possible, and always between the pump and any shut-off valve. Pipe the outlet of the system relief valve back to the suction tank, with the open end of the pipe visible at all times. In this way, relief valve leakage may be easily detected.

For safety reasons, a check valve is recommended for use in the discharge line near the point where the line enters a high-pressure process vessel.

2.4 OUTDOOR INSTALLATIONS

The mRoy pump is designed as a totally enclosed unit suitable for installation either indoors or outdoors. However, for outdoor installations the pump mounting area should be selected to provide protection against environmental extremes such as:

2.4.1 Operation with continuous exposure to tropical or subtropical sunshine with ambient temperatures above 90°F, which would cause higher oil temperatures which would affect lubricity. Good installation practice would dictate providing a sun shade cover over the pump with open sides to obtain the best air circulation around the pump.

2.4.2 Frequent start-up where the pump has been idle in an ambient temperature below 30°F. Provide a removable, insulated enclosure over the pump and mounting base with provisions for an electrical heater (100 watt light, heat lamp, heater tape, etc.) to maintain the pump oil temperature above 30°F.

SECTION 3
OPERATING INSTRUCTIONS

3.0 PRINCIPLE OF OPERATION

Pumping action is developed and controlled by four basic components as follows (See figure 10):

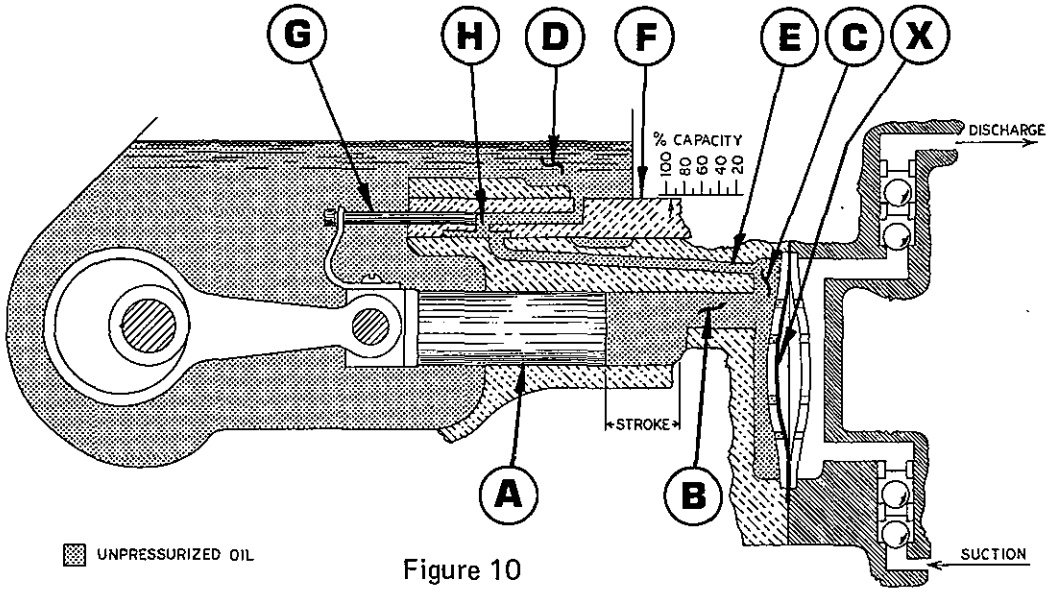

Figure 10

(1) The pump plunger "A" which reciprocates with a constant stroke length and displaces oil into and out of the diaphragm chamber "C".

(2) The flexible diaphragm "X" which is a movable partition between the plunger oil and fluid being pumped.

(3) An oil by-pass circuit from the diaphragm chamber "C" to the reservoir "D" thru passage "E" by-pass port "H" and control valve "F".

(4) A by-pass control plunger "G" which moves with and is directly coupled to the pump plunger to correlate by-pass shut off at port "H" to pump plunger position.

In operation, as the pump plunger and by-pass control plunger move forward as shown in Figure 10, the displaced oil is by-passed to the oil reservoir until the control plunger "G" closes the by-pass port "H" as shown in Figure 11. Then the balance of the plunger displacement is imposed on the flexible diaphragm which moves and displaces the fluid being pumped thru the discharge ball checks.

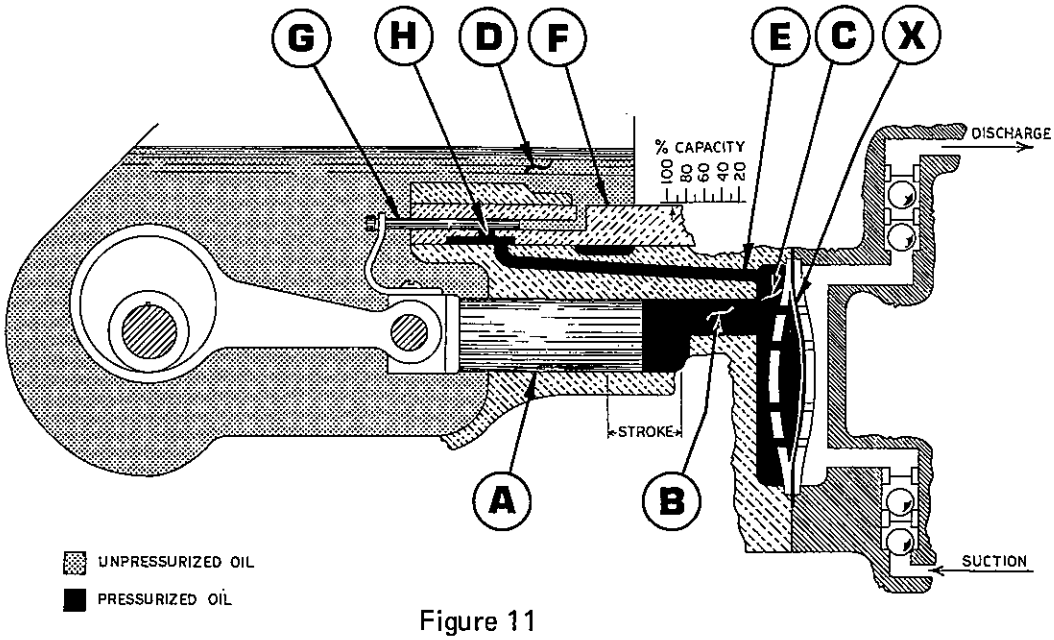

Figure 11

On the suction stroke, the pump plunger pulls oil out of the diaphragm cavity which moves the flexible diaphragm and pulls fluid thru the suction ball checks. When the control plunger "G" opens the by-pass port "H" the balance of the plunger oil displacement can be supplied from the reservoir thru the by-pass passages.

The discharge capacity is adjusted from 0-100% by rotating the adjustment knob which moves the control valve "F" so that the by-pass port "H" is closed at the desired percentage of the total plunger stroke. When the control valve is adjusted to 100% capacity the by-pass port will be positioned so that it is opened at the very end of the suction stroke. Then on the pressure stroke, the by-pass port is immediately closed so the entire plunger displacement is imposed upon the flexible diaphragm.

With the control valve adjusted for 50% capacity the by-pass port will be positioned so that it is opened when the plungers have completed one-half of the suction stroke. On the next pressure stroke the oil displaced by the pump plunger will be by-passed thru the open port to the reservoir for the first 50% of the stroke before the by-pass port is closed by the control plunger then the remaining 50% of the plunger displacement will be imposed on the flexible diaphragm so that fluid is discharged for only 50% of the plunger travel. A similar analysis would apply for 0% capacity setting on the control valve where all the plunger oil displacement is by-passed to the reservoir.

3.1 START UP

Before initial start up of the pump check the following:

3.1.1 Oil level in air bleed filler reservoir up to or slightly above the indicated oil level.

3.1.2 Set the capacity control knob to approximately 30-40% of max. capacity.

3.1.3 Make certain that the suction line, liquid end and discharge cartridge are filled with water or system fluid.

3.1.4 If practical, install a temporary discharge line piped back to the suction tank incorporating a 100 PSI relief valve to facilitate establishing performance during first hours of operation.

3.1.5 On initial startups, run the pump for 10-20 seconds, then stop for 20-30 seconds. Repeat approx. 15 times in order to fill the diaphragm oil cavity. Check for proper motor rotation refer to paragraph 2.0.8. During these short runs listen for any abnormal motor or crank noises, and if present, refer to Trouble Shooting Chart Section 6.

3.1.6 Run pump for one-half to one and one-half hours to warm up oil. Check discharge line for indication of flow.

3.1.7 Increase capacity adjustment setting to 100% of maximum capacity and operate for 10-20 minutes.

CAUTION

Do not set the capacity adjustment knob in excess of 100% because erratic or reduced metering will develop.

3.1.8 Reduce capacity adjustment setting to 30-40% of maximum capacity and operate for several minutes, then increase capacity adjustment back to 100% for approximately 10 minutes. Repeat several times to insure that the air is bled from the pump displacement chamber and the liquid end. (As a general rule, to bleed air or vapor from the pump oil displacement chamber reduce the capacity adjustment to the 20 to 40% range, and to bleed air or vapor from the liquid end increase capacity to 100%, or if possible reduce the discharge pressure to atmospheric pressure for 30 seconds to one minute.)

3.1.9 The pump is now ready for "on line" service. Calculate what the desired capacity as a percentage of either the maximum capacity rating on the pump data plate, or the nominal capacity at the required system pressure. As indicated on the "Capacity vs Pressure" table, page 33, dial to the desired value. Each pump is tested at the factory to confirm that the performance meets these capacity-pressure requirements (when tested with water).

3.2 START-UP WITH BACK PRESSURE SPRING IN DISCHARGE CARTRIDGE

The start-up procedure with the back-pressure spring installed is identical to the above procedure; however, the back-pressure device will hold air in the liquid end. It is necessary to make certain that the liquid end is filled with fluid, either by

removing the discharge cartridge and filling liquid end and inlet lines before start up, or by backing out the discharge cartridge cap approximately seven (7) turns to remove the spring load on the ball check permitting the air in the liquid end to be discharged.

3.3 START-UP AFTER THE SUCTION SYSTEM HAS RUN DRY:

In applications where the suction tank does not have a low level cut-off interconnected into the pump motor circuit, the pump may occasionally run dry. **This must be avoided because damage to the pump can result and the service life will be significantly reduced when the pump is allowed to run with a dry liquid end.**

Before restarting a pump which has run dry provisions should be made for filling the liquid end with liquid by opening the discharge line to atmospheric pressure to either (1) refill liquid end with flooded suction pressure or (2) start pump with open discharge and run for a short period of time (up to 2 minutes) which will 'prime' the liquid end if the ball checks are wet. If these steps fail, remove the discharge cartridge and fill liquid end with liquid through the top discharge boss. After establishing flow, return to the regular discharge system configuration.

3.4 OPERATION WHERE SUCTION LIFT IS REQUIRED

It is desirable that the mRoy pump operate with a flooded suction; however, operation with net positive suction heads (NPSH) less than atmospheric pressure is possible.

NPSH is the head available, above the vapor pressure of the liquid being pumped, to feed the liquid into the pump suction port. $NPSH_{min}$ is the head below which the pump cavitates.

Both values are calculated at the suction port of the pump. In controlled volume pump applications, two conditions must be considered in the selection of a pump to meet the $NPSH_{min}$ requirements:

(1) At the start of the suction stroke, the liquid in the suction line has no velocity and $NPSH_{min}$ depends on the force necessary to accelerate the liquid in the suction pipeline.

(2) At the peak of the suction stroke there is no acceleration factor and $NPSH_{min}$ depends on friction losses as calculated from standard flow equations. With all viscous fluids and in pilot plants and other places where unusual numbers of fittings and valves are used, the second condition which includes friction losses should be considered. For water like fluids, the first condition will define the limiting configuration.

For Condition 1(Static NPSH)

Available NPSH = Pa + Ph - Pv (must be equal to or greater than Min NPSH as listed under Installation Instructions, page 5.

$$\text{Required NPSHmin} = \frac{\text{Sp.Gr. (.0925) LpD}}{Dp^2}$$

For Condition 2 (Dynamic NPSH) Available NPSH = Pa + Ph - Pv - Pf Le (must be equal to or greater than Min NPSH as listed under Installation Instructions, page 5.

WHERE:

D = Plunger Diameter (inches)

Dp = Pipe Diameter (inches)

Lp = Actual Length of suction pipe (feet)

Le = Equivalent length of suction pipe including allowance for fittings (feet)

Pa = Ambient pressure above liquid (PSIA)

Ph = Head of liquid column above (+) or below (-) center line of plunger (PSIA) = Head in feet x (.435) (Sp.Gr.)

Pv = Vapor pressure of liquid (PSIA)

Pf = Friction loss per foot of pipe calculated from Reynold Number evaluation (PSIA) (Use 3.2 times average velocity for calculating friction losses when referring to a standard pipe losses table.)

Min NPSH = Minimum hydraulic pressure at plunger (listed under Installation Instructions).

When operating the pump with a NPSH of less than atmospheric pressure (negative suction head or suction lift), special attention should be given to keep the suction line strainer clean and prevent other system conditions which might inadvertently decrease the NPSH available.

SECTION 4
MAINTENANCE INSTRUCTIONS

4.0 PERIODIC MAINTENANCE:

4.0.1 The mRoy pump is designed for reliable service with a minimum amount of maintenance required. In normal operation, a periodic check of the pump is recommended every 24 or 48 hours to visually confirm satisfactory operation by

(a) observing that the oil level in the air bleed filler reservoir is above the indicated mark (See figure 3).

(b) inspecting the pump liquid end for indication of leakage or seepage.

4.0.2 The oil in the main housing should be drained twice a year, using the drain plug provided, and new oil installed. This can usually be scheduled to coincide with the change from winter to summer grade lubricants and vice versa.

4.1 RECOMMENDED REPLACEMENT PARTS:

To avoid excessive downtime in the event of a parts malfunction the following quantities of spare parts should be maintained in your stores to support each mRoy pump.

Quantity *	Description	Item No.
1	Diaphragm	298-B
1	Suction cartridge assembly	221-B
1	Discharge cartridge assembly	221-C
4	Check valve cartridge "O" ring	408-B
3	Control spool "O" ring seals	408-A
8	Spiral back-up rings	408-E (408 D on Dwg. F)

*Double quantity for Duplex Pumps

4.2 MOTORS

Adequate power for the standard Frame A mRoy pump is supplied by a totally enclosed non-ventilated, single-phase motor of the "split-phase" type, which is assembled as an integral part of the gear reducer.

On the larger Frame B mRoy—since the normal temperature rise for these motors is 50°C above ambient temperature, it can be expected that these motors will appear to operate at higher temperatures than are normally experienced. However, there is no cause for worry if the following precautions are observed:

(1) The motor is placed where there is adequate ventilation and is protected against excessive radiation from steam pipes and other heat sources.

(2) The overload heater in the starting device should be correctly sized for motor full load current rating as shown on the motor data plate.

SECTION 5
DISASSEMBLY AND PARTS REPLACEMENT

Procedures for complete disassembly of the mRoy pump are listed below. Some steps can be omitted depending on which part is replaced.

5.1 MOTOR REMOVAL

Remove oil drain plug (See figure 12) and drain oil from pump.

Remove four (4) screws from top of motor housing (See figure 13).

Remove motor cover.

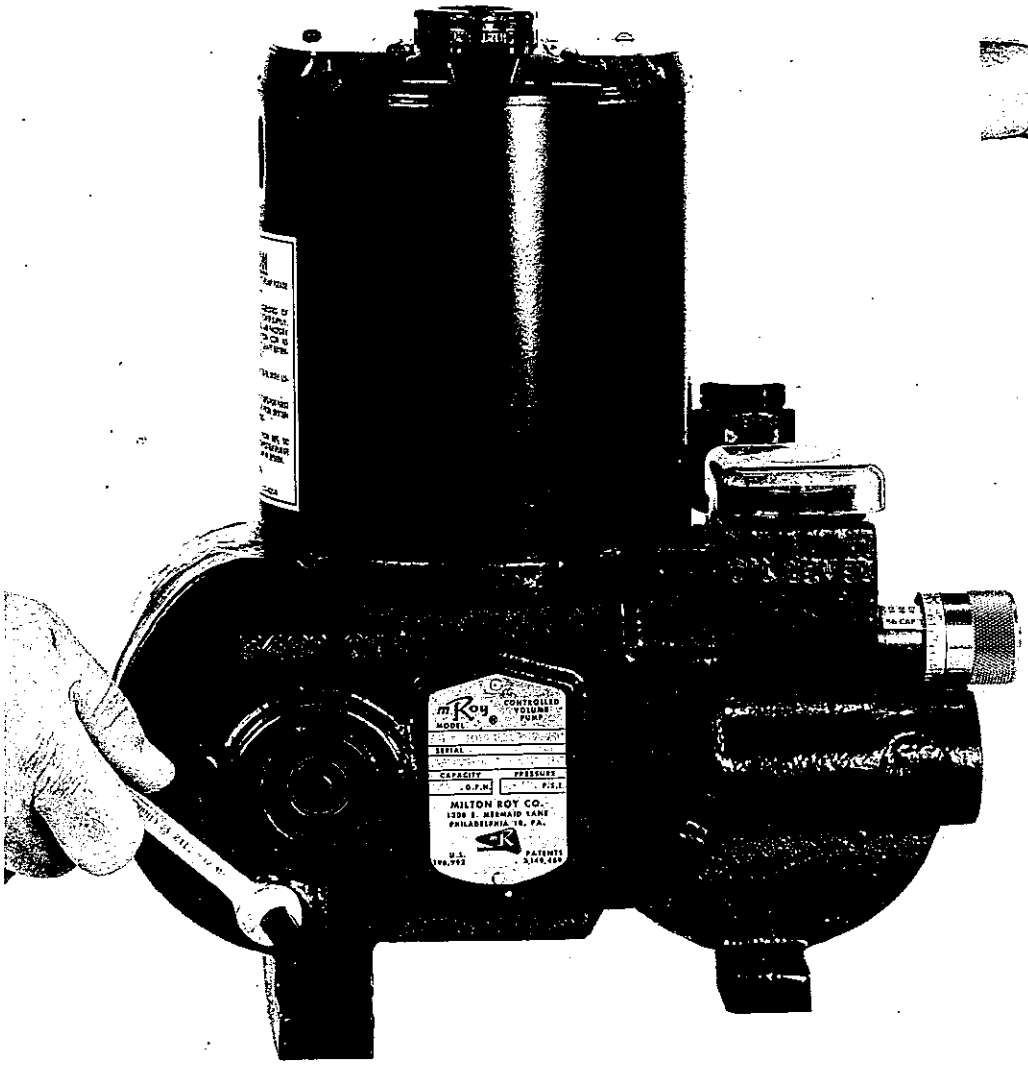

Figure 12

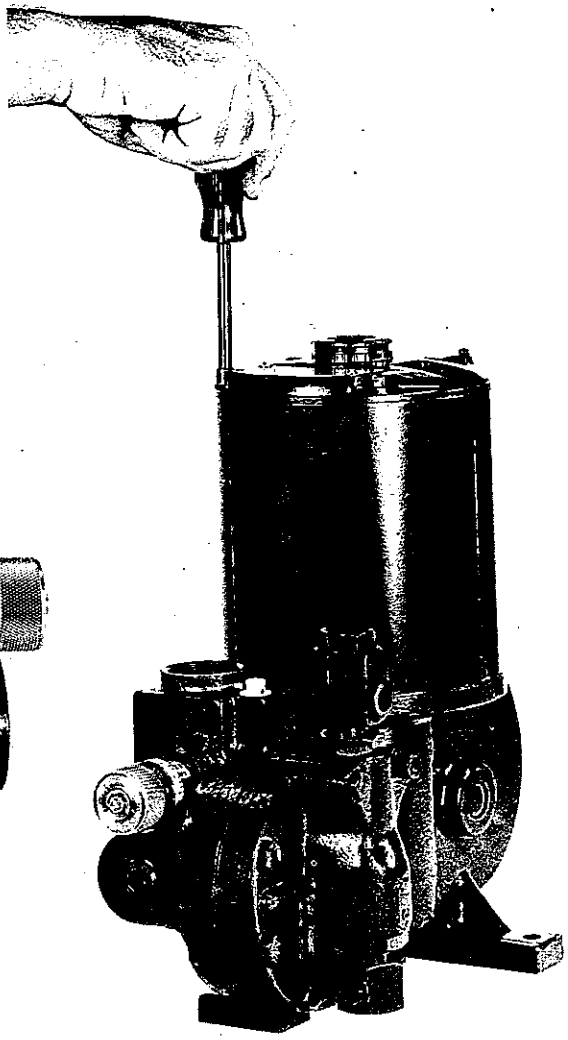

Figure 13

Note that two (2) Belleville washers and one or more flat washers are retained in the top of the motor housing by grease (See figure 14). If these washers should fall out, make sure thay are replaced prior to motor assembly.

Remove worm assembly.

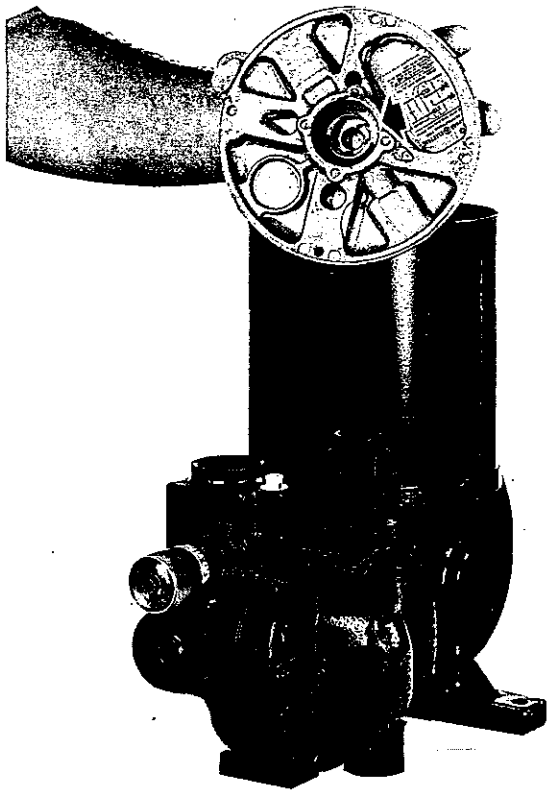

Figure 14

5.2 SUCTION AND DISCHARGE CARTRIDGE REMOVAL

The suction and discharge check valve cartridges are precision assembled at the factory. Do not attempt to disassemble these cartridges. If they become inoperative, flush them with carbon tetrachloride (or similar solvent), wash them with warm detergent and blow them out with compressed air to remove any foreign matter. If this treatment does not eliminate the trouble, the cartridge assembly should be replaced.

5.3 METALLIC LIQUID ENDS (See Drawings C, D, F and G)

The suction and discharge cartridge assemblies use an SAE straight thread with an "O" ring seal to facilitate port allignment with the connecting pipes. To remove the cartridge from the liquid end, first loosen the lock nut one or two times, then remove the cartridge.

To install the cartridge, position the lock nut toward the shoulder of the cartridge so that the recess on the face of the lock nut is adjacent to the "O" ring land (thread undercut) in the cartridge.

Make certain the Teflon spiral back-up ring is coiled in a counter-clockwise helix (this is opposite the direction normally employed by suppliers of these rings;)(See figure 15). Fit this back-up ring in the lock nut recess. Push it firmly down in the recess as completely as possible. Install a new "O" ring against the spiral back-up ring (See figure 16).

Figure 15

Figure 16

Screw the cartridge assembly into the liquid end until the "O" ring band is approximately level with the top of the spotface in the liquid end, then screw it in one (1) additional turn plus a partial turn as required to align the pipe thread part with connecting pipe.

After completing pipe connection, tighten lock nut securely against spotface so that "O" ring is trapped in chamfer of liquid end thread. Make sure that spiral back-up ring is completely contained in its recess and not extending to the outside.

5.4 PLASTIC LIQUID ENDS (See Drawings E and J)

The suction and discharge cartridges are held in place by the clamping yoke. To remove them, remove clamping yoke and lift them out of pump suction and discharge ports.

During assembly, the suction and discharge cartridges can be rotated to suit piping conditions by loosening the top stud nuts (405-G). The stud nuts should be re-tightened before the pump is started.

NOTE

The "O" rings and Teflon back-up rings on the suction and discharge cartridges should not be reused. These should be replaced with new parts whenever they are removed from the pump.

5.5 DIAPHRAGM

Remove eight (8) bolts from diaphragm head (See figure 17).

Remove diaphragm using knife blade (See figure 18).

Remove contour plates.

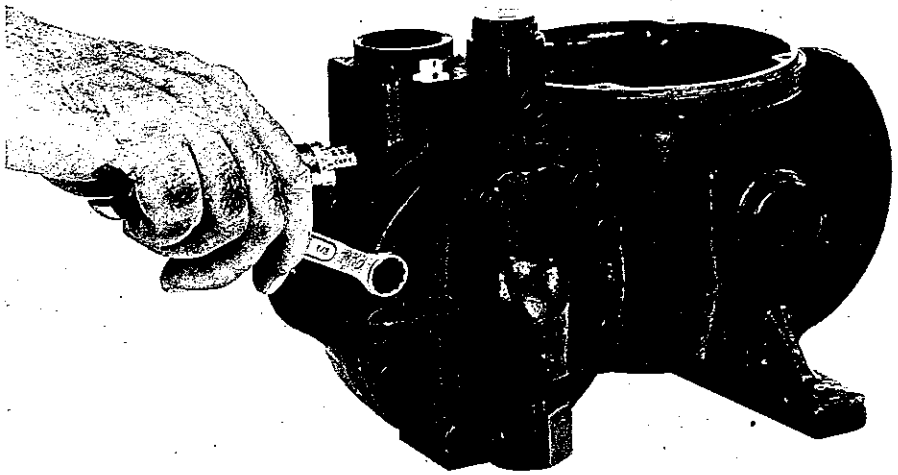

Figure 17

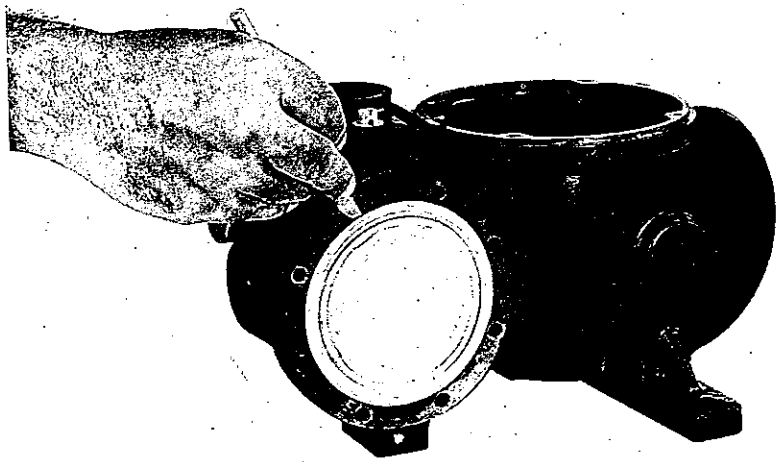

Figure 18

To install diaphragm perform the following:

Place pump on its side with diaphragm cavity up.

Install contour plates.

Carefully center diaphragm in shallow recess.

Retain diaphragm with thin, flat blade ½" to 1" wide.

Install diaphragm head with eight (8) bolts. Remove blade and torque bolts as follows:

mRoy A Metallic Pumps - 100 to 110 in. lbs.
mRoy A Plastic Pumps - "A" & "B" 50 to 70 in. lbs.
mRoy B Metallic Pumps - 200 to 210 in. lbs.

5.6 CONTROL SPOOL

Remove "E" ring (See figure 19).

Unscrew and remove capacity control knob.

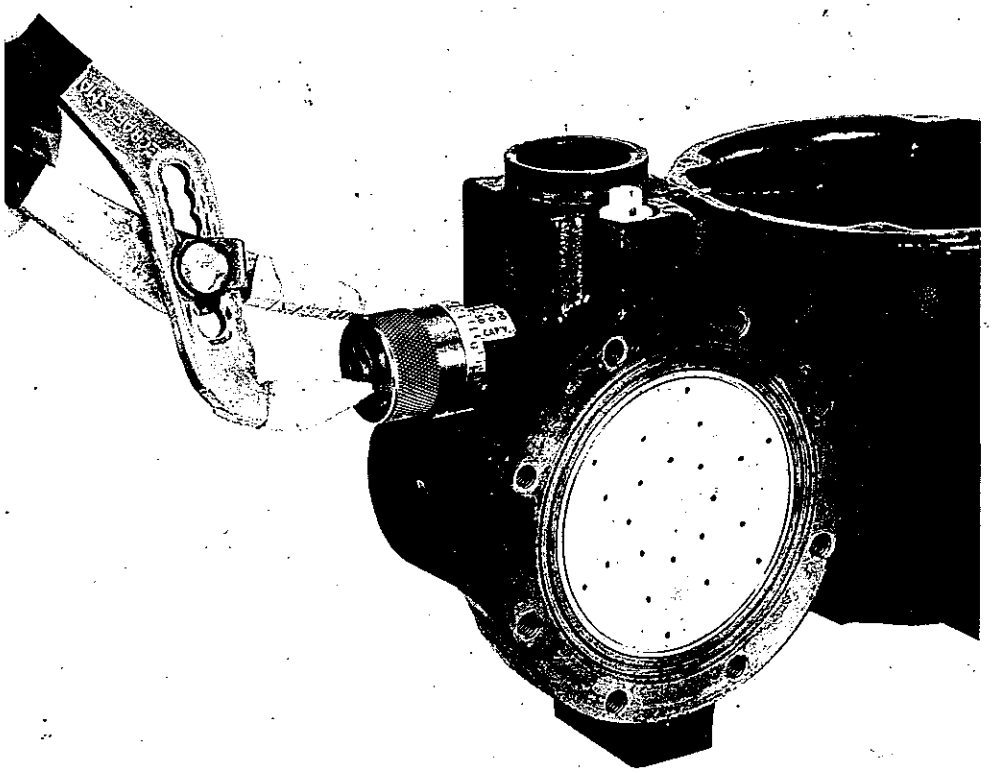

Figure 19

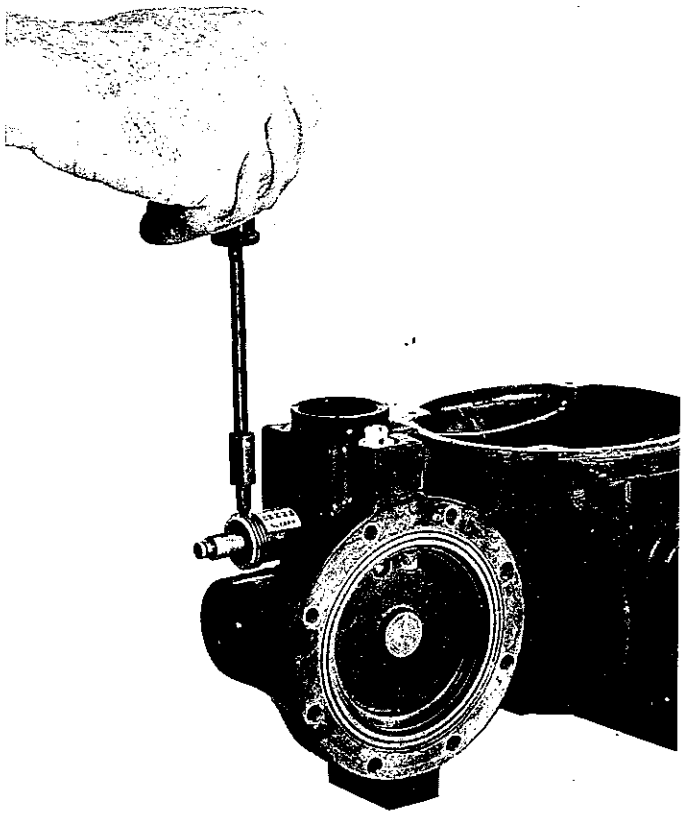

Figure 20

Loosen screw in capacity control (See figure 20). Make sure screw end is flush with top of keyway to prevent damage to control spool "O" rings.

Install tool* into 3/16 inch diameter hole connecting the diaphragm chamber with the control spool bore and remove control spool (See figure 21).

When installing control spool, first coat it liberally with grease. Push the control spool into the bore carefully, using tool* to guide "O" ring across the intersecting passage. This is done to prevent damage to the "O" rings. Finally, guide the control piston into the center of the control spool (See figure 22).

*On mRoy A pumps use tool No.A211-0038-074
On mRoy B pumps use tool No.BT-F-102-0167-000-1,-2,-3,-4

5.7 WORM GEAR

Use arbor press and press out gear shaft.

Lift worm gear up and out of pump housing.

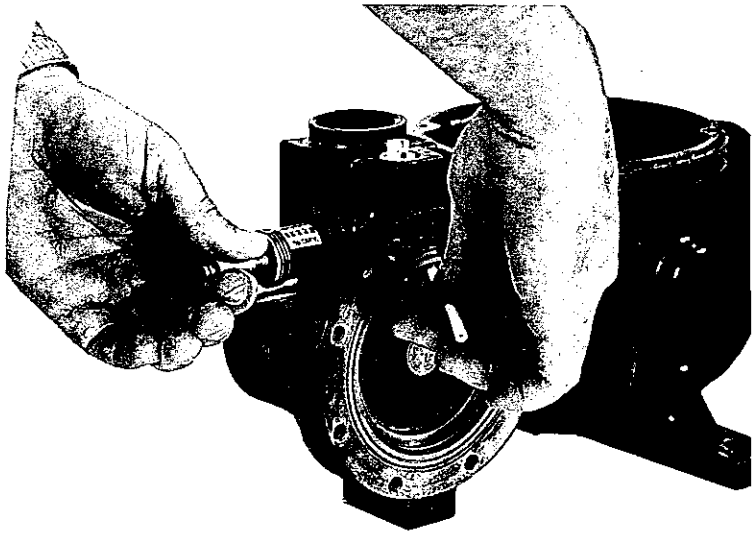

Figure 21

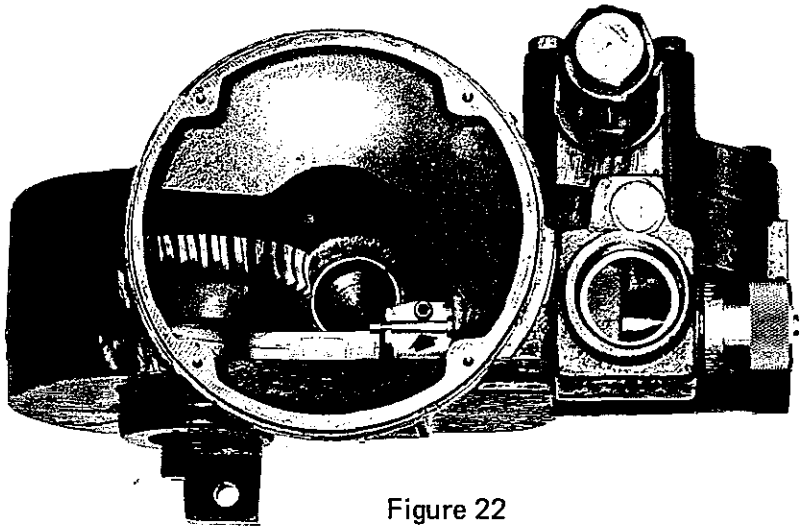

Figure 22

NOTE

Do **NOT** remove or change position of spanner nut in pump housing. This is factory set for proper piston alignment in bore.

5.8 CONNECTING ROD AND PISTON

Lift connecting rod up and back to disengage piston from bore.

Use arbor press to remove wrist pin from connecting rod and piston.

To assure proper installation, note position of oil hole in wrist pin with respect to connecting rod and piston.

SECTION 6
TROUBLE SHOOTING CHART

SYMPTOM	CAUSE	REMEDY
1. Pump Motor Won't Operate	A. Blown fuse	A. Check for short circuit or overload
	B. Open thermal overload device in starter	B. Reset
	C. Low liquid level (where low level cut off is used)	C. Fill tank
	D. Broken wire	D. Locate and repair
	E. Low voltage	E. Check for too light wiring
	F. Oils "frozen" in pump	F. Thaw out
2. Pump Doesn't Deliver Rated Capacity	A. Starved suction	A. Replace suction piping with larger size, or increase suction head
	B. Leaky suction piping	B. Pressure test, repair or replace defective piping
	C. Excessive suction lift	C. Rearrange equipment location to reduce suction lift
	D. Liquid too close to boiling point	D. Lower temperature or increase suction pressure
	E. Air or gas trapped in oil or pumpage	E. Decrease capacity to 20% for 5 mins., then increase to 100% for 5 mins.
	F. Worn or dirty valves or seats, or both	F. Clean or replace
	G. Viscosity of liquid too high (CPS)	G. (1) Reduce viscosity in heating, or other means; (2) Increase size of suction piping; (3) Increase suction pressure

SYMPTOM	CAUSE	REMEDY
2. Pump Doesn't Deliver Rated Capacity (Continued)	H. Insoluble materials crystallization of solids settling	H. Limit solution strength to 5% by weight. Flush and clean solution tank periodically. Suction connection should be 2 to 4" from bottom of solution tank
	I. Low discharge pressure	I. A minimum discharge pressure of 50-70 PSI is required to insure proper capacity control
	J. Relief valve being actuated	J. Refer to Remedy Column Item 5-2-B below
	K. Capacity adjustment set above 100% capacity mark	K. Reposition adjustment knob to 100% mark
	L. Air in hydraulic or reagent system	L. Bleed system
3. Pump Delivers Erratically	A. Leaky suction line	A. Repair or replace piping
	B. Worn or dirty valve seats, or both	B. Clean or replace cartridges
	C. Excessive excursion of ball valves from seats (indicated by ball chatter)	C. Replace cartridges
	D. Insufficient suction pressure	D. Increase suction pressure: (1) Raise tank level (2) Pressurize suction tank
	E. Liquid too close to boiling point	E. Reduce temperature or raise suction pressure
	F. Leaky system relief valve	F. Repair or replace relief valve
4. Motor Overheats Thermal Overload Switches	A. Power supply does not match motor characteristics	A. Check power supply against motor name plate data

SYMPTOM	CAUSE	REMEDY
4. Motor Overheats Thermal Overload Switches (Continued)	B. Overload caused by operating pump beyond rated capacity	B. Check operating pressure against pump manufacturer's data plate max. rating
5. Noisy Operation (1) In Pump	A. Pump valves	A. Valves must move to open and close, and they will make a clicking noise as they operate. These noises are sometimes amplified by natural resonances in the piping system. They are usually indications of normal valve functioning.
(2) In Drive Casing	A. Pounding noise at high discharge pressure	A. Fluid compressibility causes reversal of load on gears at end of pressure stroke. Not considered detrimental.
	B. Pounding noise at low or normal pressure	B. Pump internal relief valve being actuated. Isolate displacement chamber oil from gear box oil by plugging passage between gear box and filler reservoir. If reservoir oil level drops rapidly during operation relief valve is being actuated due to: (1) Excessive suction lift requirements increase suction pressure. Clean strainer. (2) Blocked discharge line ahead of pressure gauge. (3) Insufficient discharge pressure (60 PSIG Min.)
6. Improper Oil Level In Reservoir	A. Increases and overflows	A. Flexible diaphragm punctured by foreign material —replace diaphragm.

SYMPTOM	CAUSE	REMEDY
7. Pump Delivery Is Not Adjustable	A. System pressure too low	A. Install back-pressure spring, provided, into discharge cartridge.
		B. Install back pressure valve.
8. Pump Does Not Develop Required Pressure	A. Internal relief valve leaking	A. Refer to remedy column Item 5-2-B above.
	B. Internal relief valve being actuated	B. System pressure exceeds rated pressure on data plate
	C. "O" ring (rings) on control spool are "nicked"	C. Replace "O" rings

M-ROY PUMP CAPACITY-PRESSURE TABLES

FRAME A

GPH @ PSI

SERIES	PLG DIA	SPM	100	200	300	400	500	600	700	800	900	1000	1100	1200	1300	1400	1500	1600	1700	1800
100	7/16	117	2.8	2.7	2.7	2.6	2.6	2.6	2.5	2.5	2.4	2.4	2.4	2.3	2.2	2.2	2.1	2.1	2.0	2.0
110	7/16	117	2.8	2.7	2.7	2.6	2.6	2.6	2.5	2.5	2.4	2.4	2.4							
	7/16	37	0.8	0.7	0.7	0.7	0.7	0.6	0.6											
120	5/8	117	6.2	6.0	5.9	5.7	5.6	5.5	5.3	5.2	5.1									
	5/8	37	1.8	1.7	1.6	1.6	1.5	1.4	1.4											
130	1-1/16	117	18.3	17.6	17.0	16.6 @ 350														

NOTES:

1. PVC Liquid Ends limited to 150 PSI

FRAME B

SERIES	PLG DIA	SPM	100	200	300	400	500	600	700	800	900	1000	1100	1200	1300	1400	1500
		48	4.7	4.5	4.3	4.2	4.0	3.8	3.6	3.4	3.2	3.1	2.9	2.7	2.5	2.3	2.2
140	19/32	72	7.0	6.8	6.6	6.5	6.3	6.1	6.0	5.8	5.7	5.5	5.3	5.2	5.0	4.9	4.7
		96	9.5	9.3	9.1	8.9	8.8	8.6	8.4	8.3	8.1	7.9	7.7	7.6	7.4	7.2	7.1
		144	14.0	13.8	13.7	13.5	13.4	13.2	13.1	12.9	12.8	12.7	12.5	12.4	12.2	12.1	12.0
150	7/8	48	10.0	9.4	8.8	8.2	7.6	7.0	6.5	5.9	5.3	4.7					
		72	16.0	15.4	14.8	14.3	13.7	13.2	12.6	12.1	11.5	11.0					
		96	21.0	20.4	19.8	19.3	18.7	18.2	17.6	17.1	16.5	16.0					
		144	32.0	31.4	30.8	30.3	29.7	29.2	28.6	28.1	27.5	27					
160	1-7/16	48	27.0	25.0	23.0	21.0											
		72	42.0	40.0	38.0	36.0											
		96	57.0	55.0	53.0	51.0											
		144	85.0	83.0	81.0	79.0											

Discharge pressure increased from 500 to 1000 PSI thru use of 3/4 H.P. Motor on FR Units only

Discharge pressure increased from 100 to 400 PSI thru use of 3/4 H.P. Motor on FR Units only

PARTS DRAWING IDENTIFICATION

To determine the Parts Drawings which apply to your particular pump, first obtain the pump model number from the nameplate and refer to the listings below. Apply the Parts Dwg. letter indicated, to the drawings in the back of the manual.

FRAME "A" mROY PUMPS

INTEGRAL MOTOR MODEL NUMBERS SERIES R			
Simplex		Duplex	
Model	Parts. Dwg.	Model	Parts Dwg.
R100A	C	R200A	D
R101A	C	R201A	D
R110A	C	R210A	D
R111A	C	R211A	D
N.A.		N.A.	
N.A.		N.A.	
37R110A	C	37R210A	D
37R111A	C	37R211A	D
37R112A	E	37R212A	J
37R113A	C	37R213A	D
37R120A	C	37R220A	D
37R121A	C	37R221A	D
37R122A	E	37R222A	J
37R123A	C	37R223A	D
R120A	C	R220A	D
R121A	C	R221A	D
R122A	E	R222A	J
R123A	C	R223A	D
R130A	C	R230A	D
R131A	C	R231A	D
R132A	E	R232A	J
R133A	C	R233A	D

FLANGE MOUNTED MOTOR MODEL NUMBERS SERIES FR			
Simplex		Duplex	
Model	Parts. Dwg.	Model	Parts Dwg.
FR100A	C,H	FR200A	D
FR101A	C,H	FR201A	D
FR110A	C,H	FR210A	D
FR111A	C,H	FR211A	D
N.A.		N.A.	
N.A.		N.A.	
37FR110A	C,H	37FR210A	D
37FR111A	C,H	37FR211A	D
37FR112A	E,H	37FR212A	J,H
37FR113A	C,H	37FR213A	D
37FR120A	C,H	37FR220A	D
37FR121A	C,H	37FR221A	D
37FR122A	E,H	37FR222A	J,H
37FR123A	C,H	37FR223A	D
FR120A	C,H	FR220A	D
FR121A	C,H	FR221A	D
FR122A	E,H	FR222A	J,H
FR123A	C,H	FR223A	D
FR130A	C,H	FR230A	D
FR131A	C,H	FR231A	D
FR132A	E,H	FR232A	J,H
FR133A	C,H	FR233A	D

FRAME "B" mROY PUMPS

INTEGRAL MOTOR MODEL NUMBERS SERIES R			
Simplex		Duplex	
Model	Parts. Dwg.	Model	Parts Dwg.
R140A	G	R240A	D
R141A	G	R241A	D
R143A	G	R243A	D
R144A	G	R244A	D
R150A	G	R250A	D
R151A	G	R251A	D
R153A	G	R253A	D
R154A	G	R254A	D
R160A	G	R260A	D
R161A	G	R261A	D
R163A	G	R263A	D
R164A	G	R264A	D

FLANGE MOUNTED MOTOR MODEL NUMBERS SERIES FR			
Simplex		Duplex	
Model	Parts. Dwg.	Model	Parts Dwg.
FR140	F	FR240	D
FR141	F	FR241	D
FR143	F	FR243	D
FR144	F	FR244	D
FR150	F	FR250	D
FR151	F	FR251	D
FR153	F	FR253	D
FR154	F	FR254	D
FR160	F	FR260	D
FR161	F	FR261	D
FR163	F	FR263	D
FR164	F	FR264	D

C

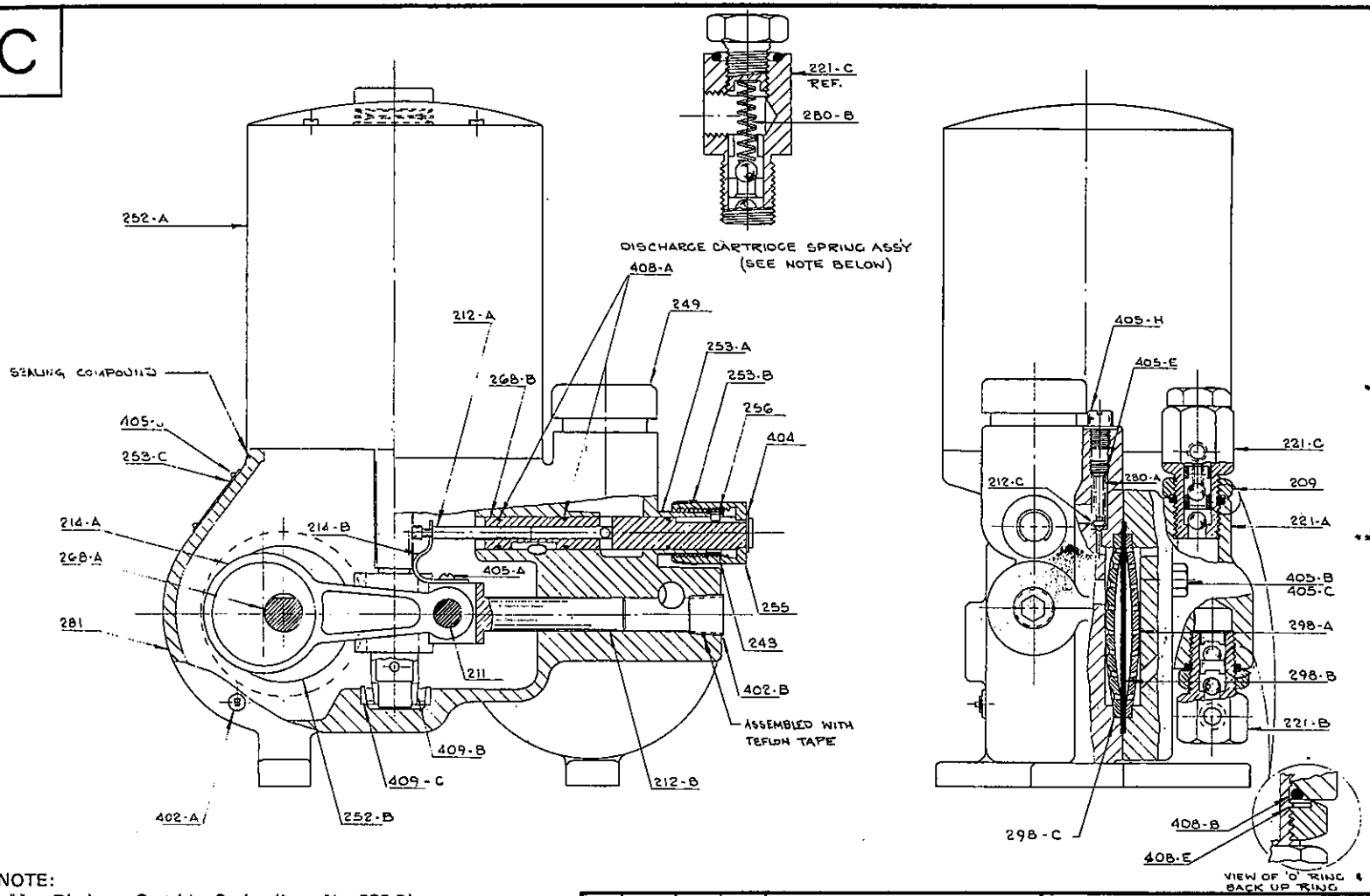

ITEM NO.	DESCRIPTION
209	LOCKING NUT
211	WRIST PIN
212-A	CONTROL PLUNGER
212-B	PLUNGER
212-C	POPPET-RELIEF VALVE
405-H	SCREW PLUG-RELIEF VALVE
280-A	SPRING-RELIEF VALVE
405-E	ADJ. SCREW-RELIEF VALVE
214-A	CONNECTING ROD
214-B	LINKAGE ARM
221-A	DIAPHRAGM HEAD
* 221-B	SUCTION CARTRIDGE ASSY
	CONSISTING OF :-
221-D	BODY
224	SEAT
407-B	BALL CHECK
* 221-C	DISCHARGE CARTRIDGE
	CONSISTING OF :-
221-E	BODY
222	CAP
224	SEAT
** 280-B	SPRING
407-B	BALL CHECK
408-C	'O' RING
243	THREADED SLEEVE
249	RESERVOIR CAP
* 252-A	MOTOR WORM ASSEMBLY
	CONSISTING OF :-
228	MOTOR
252-C	WORM
401-B	PIN
*** 409-B	BEARING, CONE
252-B	WORM GEAR
253-A	CAPACITY CONTROL PLATE
253-B	KNOB GRADUATION PLATE
253-C	DATA PLATE
255	CONTROL KNOB
256	SLEEVE SCREW
268-A	GEAR SHAFT
268-B	CONTROL SPOOL
281	MAIN HOUSING
298-A	CONTOUR PLATE
298-B	DIAPHRAGM
298-C	CONTOUR PLATE :OIL SIDE
402-A	DRAIN PLUG
402-B	END PLUG
404	'E' RING
405-A	LINKAGE SCREW
405-B	SCREW, DIAPH. HEAD, LONG
405-C	SCREW, DIAPH. HEAD, SHORT
405-J	DRIVE SCREW
408-A	O RING, CONTROL SPOOL
408-B	'O' RING, LOCKING NUT
409-C	BEARING CUP
408-E	SPIRAL BACK-UP RING
909	MILTON ROY LOGO

NOTE:

** Discharge Cartridge Spring (Item No. 280-B) Supplied separately, to be installed by customer only if discharge pressure is less than 50 P.S.I.

* These items supplied only as an assembly.

*** Item 409-B available separately (409-B + 409-C = one complete bearing)

CHG.	DATE	BY	APPR.	REVISION
B	3-18-65	J.P.B.		ITEM 219 SPACER DELETED NOT REQ. ON CASTINGS WITH INTEGRAL HUB. MT-3
A	1-25-65	[illegible]		ADDED :- *** NOTE, & 409-C ECN 1582

DESCRIPTION: m ROY PUMP ~ SIMPLEX MOD A - METALLIC LIQUID END.

B/M (REF.)

SUPERSEDES: B-102-0065-000 DATED 9-17-62 ECN 1519

MAT'L-YY

DWN.	APPR.	DATE	SCALE	PATT. CODE
S.O.M.		3-6-64	6"=1.0"	

MILTON ROY COMPANY

TITLE: m ROY SIMPLEX PUMP PARTS & ASSEMBLY DWG

DWG. NO. P-102-0290-000

D

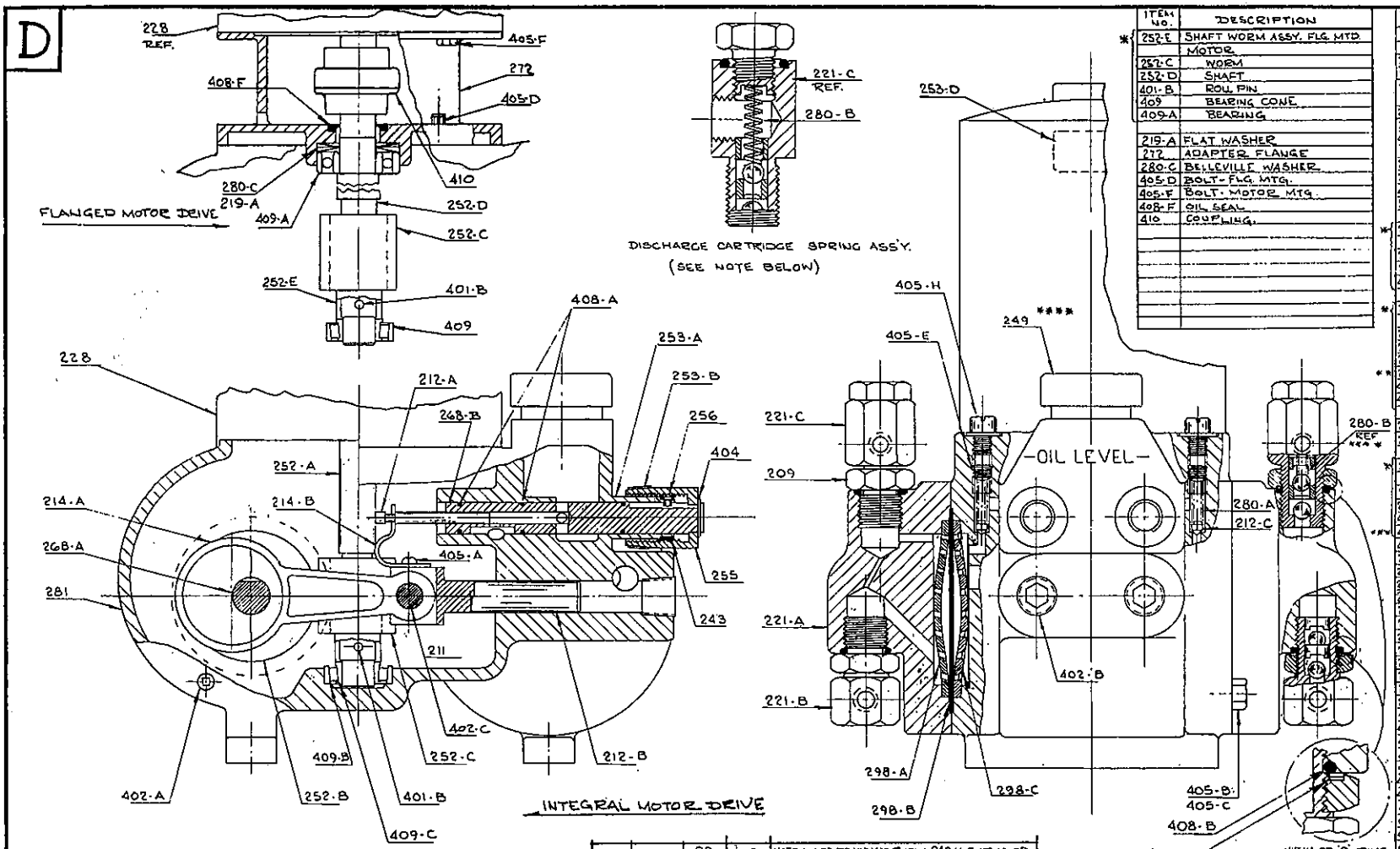

ITEM NO.	DESCRIPTION
* 252-E	SHAFT WORM ASSY. FLG. MTD.
	MOTOR
252-C	WORM
252-D	SHAFT
401-B	ROL PIN
409	BEARING CONE
409-A	BEARING
219-A	FLAT WASHER
272	ADAPTER FLANGE
280-C	BELLEVILLE WASHER
405-D	BOLT-FLG. MTG.
405-F	BOLT-MOTOR MTG
408-F	OIL SEAL
410	COUPLING

ITEM NO.	DESCRIPTION
209	LOCKING NUT
211	WRIST PIN
212-A	CONTROL PLUNGER
212-B	PLUNGER
212-C	POPPET, RELIEF VALVE
298-C	CONTOUR PLATE, OIL SIDE
280-A	SPRING, RELIEF VALVE
405-E	ADJ. SCREW-REL. VALVE
214-A	CONNECTING ROD
214-B	LINKAGE ARM
402-C	PLUG
221-A	DIAPHRAGM HEAD
* 221-B	SUCTION CARTRIDGE ASS'Y
	CONSISTING OF:-
221-D	BODY
224	SEAT
407-B	BALL CHECK
* 221-C	DISCHARGE CARTRIDGE
	CONSISTING OF:-
221-E	BODY
222	CAP
224	SEAT
** 280-B	SPRING
407-B	BALL CHECK
408-C	'O' RING
243	THREADED SLEEVE
249	RESERVOIR CAP
* 252-A	MOTOR SHAFT WORM ASS'Y
	INTEGRAL MOTOR CONSISTING OF
228	MOTOR
252-C	WORM
401-B	PIN
*** 409-B	BEARING-CONE
408-E	SPIRAL BACK-UP RING
252-B	WORM GEAR
253-A	CAPACITY CONTROL PLATE
253-B	KNOB GRADUATION PLATE
281	MAIN HOUSING
253-D	VOLTAGE PLATE
255	CONTROL KNOB
256	SLEEVE SCREW
268-A	GEAR SHAFT
268-B	CONTROL SPOOL
253-C	DATA PLATE
298-A	CONTOUR PLATE
298-B	DIAPHRAGM
409-C	BEARING CUP
402-A	DRAIN PLUG
402-B	END PLUG
404	'E' RING
405-A	LINKAGE SCREW
405-B	SCREW, DIAPH. HEAD, LONG
405-C	SCREW, DIAPH. HEAD, SHORT
405-H	SCREW PLUG, RELIEF VALVE
408-A	'O' RING, CONTROL SPOOL
408-B	'O' RING, LOCKING NUT
405-J	DRIVE SCREW
909	M.R. LOGO

NOTE :- ** DISCHARGE CARTRIDGE SPRING (ITEM NO. 280-B) SUPPLIED SEPARATELY. TO BE INSTALLED BY CUSTOMER ONLY IF DISCHARGE PRESSURE IS LESS THAN 50 PSI.

* THESE ITEMS ONLY SUPPLIED AS AN ASSEMBLY

*** ITEM 409-B AVAILABLE SEPARATELY. (409-B + 409-C = ONE COMPLETE BEARING.)

**** m ROY MOD. "B" RESERVOIR CAP IS FLAT COVER.

CHG.	DATE	BY	APPR.	REVISION
F	6-25-73	J.P.B.		NOTE ADDED TO INDICATE ITEM 249 IS FLAT COVER TO ACCOMODATE NEW RESERVOIR DESIGN ECN: 2116
E	3-26-67	J.P.B.		ITEM 253-D ADDED. REQUIRED ONLY ON SF 60150 ~ 268-220, 440 MOTORS ECN 1694
D	7-2-65	J.P.B.		FLANGED DRIVE ADDED MADE SUITABLE FOR 3/4 H.P.
C	3-18-65	J.P.B.		ITEM 219 SPACER DELETED NOT REQ. ON CASINGS WITH INTEGRAL HUB. MT-3
B	1-21-65	SGM		ADDED:- *** NOTE ECN 1582
A	9-21-64	J.E.M.		ADDED 298-C (CONTOUR PLATE) ECN 1549

DESCRIPTION m ROY PUMP ~ DUPLEX MOD A & B METALLIC LIQUID ENDS.

W/M (REF.)

SUPERSEDES 102-0082-000 ECN 1512

MAT'L-YY

DWN.	APPR.	DATE	SCALE	PATT. CODE
SGM		4-3-64	6" = 1'0"	

MILTON ROY COMPANY

TITLE m ROY DUPLEX PUMP PARTS & ASSEMBLY DWG.

DWG. NO. P-102-0291-000

E

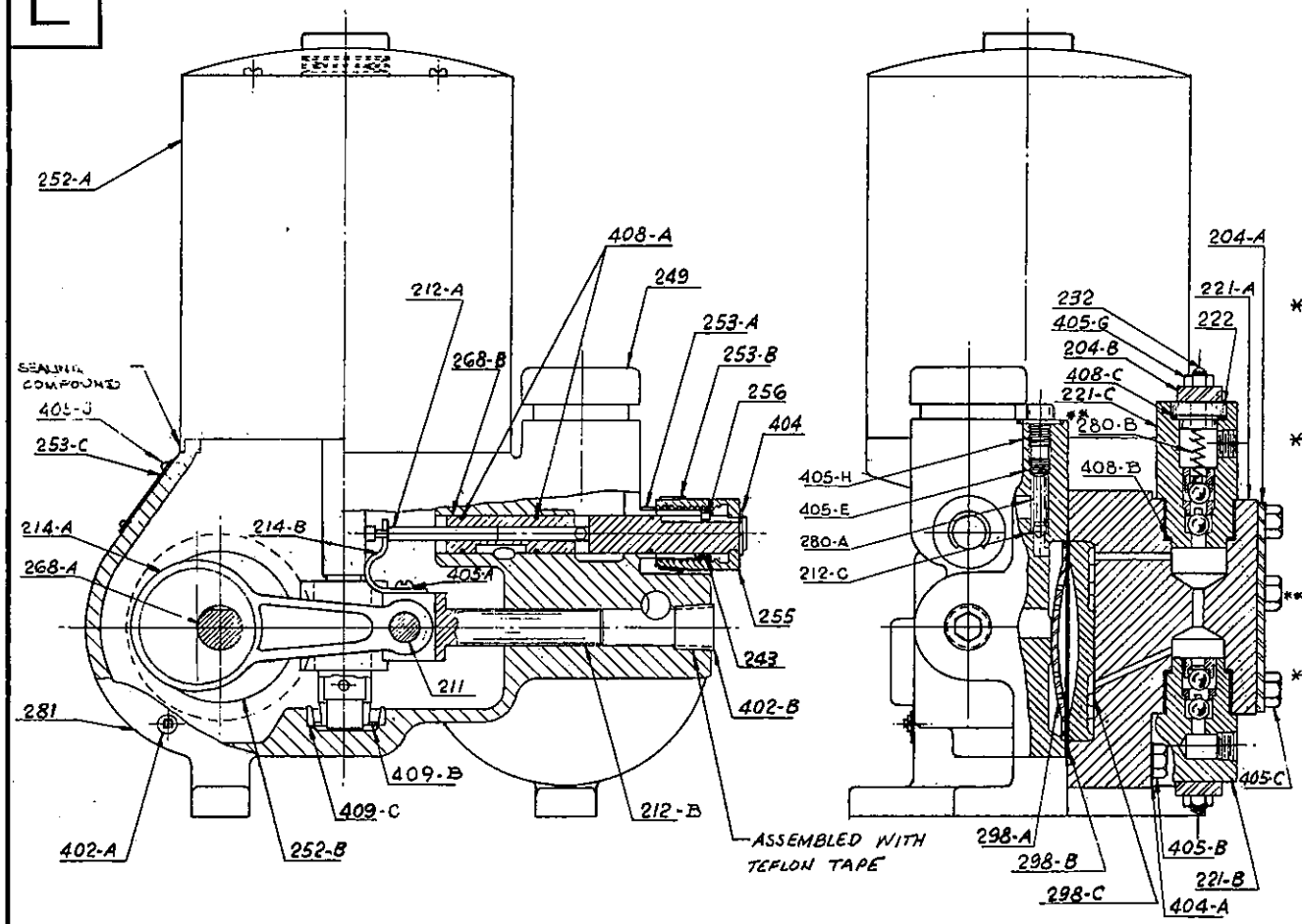

PART NO.	DESCRIPTION
204-A	PLATE-HEAD BACK-UP
204-B	PLATE-COMPRESSION
211	WRIST PIN
212-A	CONTROL PLUNGER
212-B	PLUNGER
212-C	POPPET RELIEF VALVE
280-A	SPRING RELIEF VALVE
405-E	ADJ. SCREW REL. VALVE
214-A	CONNECTING ROD
214-B	LINKAGE ARM
221-A	DIAPHRAGM HEAD
* 221-B	SUCTION CARTRIDGE ASSY.
	CONSISTING OF:
221-D	BODY
224	SEAT
292	RETAINER
407-B	BALL CHECK
* 221-C	DISCHARGE CART. ASSY.
	CONSISTING OF:
221-E	BODY
222	CAP
224	SEAT
292	RETAINER
407-B	BALL CHECK
408-C	'O' RING
** 280-B	SPRING, DISCHARGE
232	STUD
243	THREADED SLEEVE
249	RESERVOIR CAP
* 252-A	MOTOR WORM ASSY.
	CONSISTING OF:
228	MOTOR
252-C	WORM
401-B	PIN
409-B	BEARING CONE

PART NO.	DESCRIPTION
253-A	CAPACITY CONTROL PLATE
253-B	KNOB GRADUATION PLATE
253-C	DATA PLATE
255	CONTROL KNOB
256	SLEEVE SCREW
268-A	GEAR SHAFT
268-B	CONTROL SPOOL
280-B	DISCH. CART. SPRING **
281	MAIN HOUSING
298-A	CONTOUR PLATE
298-B	DIAPHRAGM
298-C	CONTOUR PLATE
402-A	DRAIN PLUG
402-B	END PLUG
404	'E' RING
405-A	LINKAGE SCREW
405-B	SCREW-DIAPH. HD.-SHORT
405-C	SCREW-DIAPH. HD.-LONG
405-J	DRIVE SCREW
405-G	NUT-STUD
405-H	SCREW PLUG-RELIEF VALVE
408-A	'O' RING-CONTROL SPOOL
408-B	'O' RING-CARTRIDGE
409-C	BEARING CUP
909	MILTON ROY LOGO
252-B	WORM GEAR
404-A	WASHER

** DISCHARGE CARTRIDGE SPRING (ITEM NO. 280-B) SUPPLIED SEPARATELY. TO BE INSTALLED BY CUSTOMER ONLY IF DISCHARGE PRESSURE IS LESS THAN 50 PSI.

* - THESE ITEMS ONLY SUPPLIED AS AN ASSEMBLY.

CHG.	DATE	BY.	APPR.	REVISION
C	9-10-65	J.F.B.		ADDED ITEM 404-A
B	3-18-65	J.F.B.		ITEM 219 SPACER DELETED NOT REQ'D. ON CASTINGS WITH INTEGRAL HUB, MT-3
A	10-24-64	SGM		ITEM 252-B WAS UNDER MOTOR ASSY

DESCRIPTION: mROY PUMP - SIMPLEX - MOD. A - PLASTIC LIQUID END.

B/M (REF.)

SUBASSEMBLIES: 102-0123-000 ECN 1512

MATL-YY

DWN.	APPR.	DATE	SCALE	PATT. CODE
SGM		4-6-64	-0-	

MILTON ROY COMPANY

TITLE: mROY SIMPLEX PUMP PARTS & ASSEMBLY DWG.

DWG. NO. P-102-0292-000

15.122

F

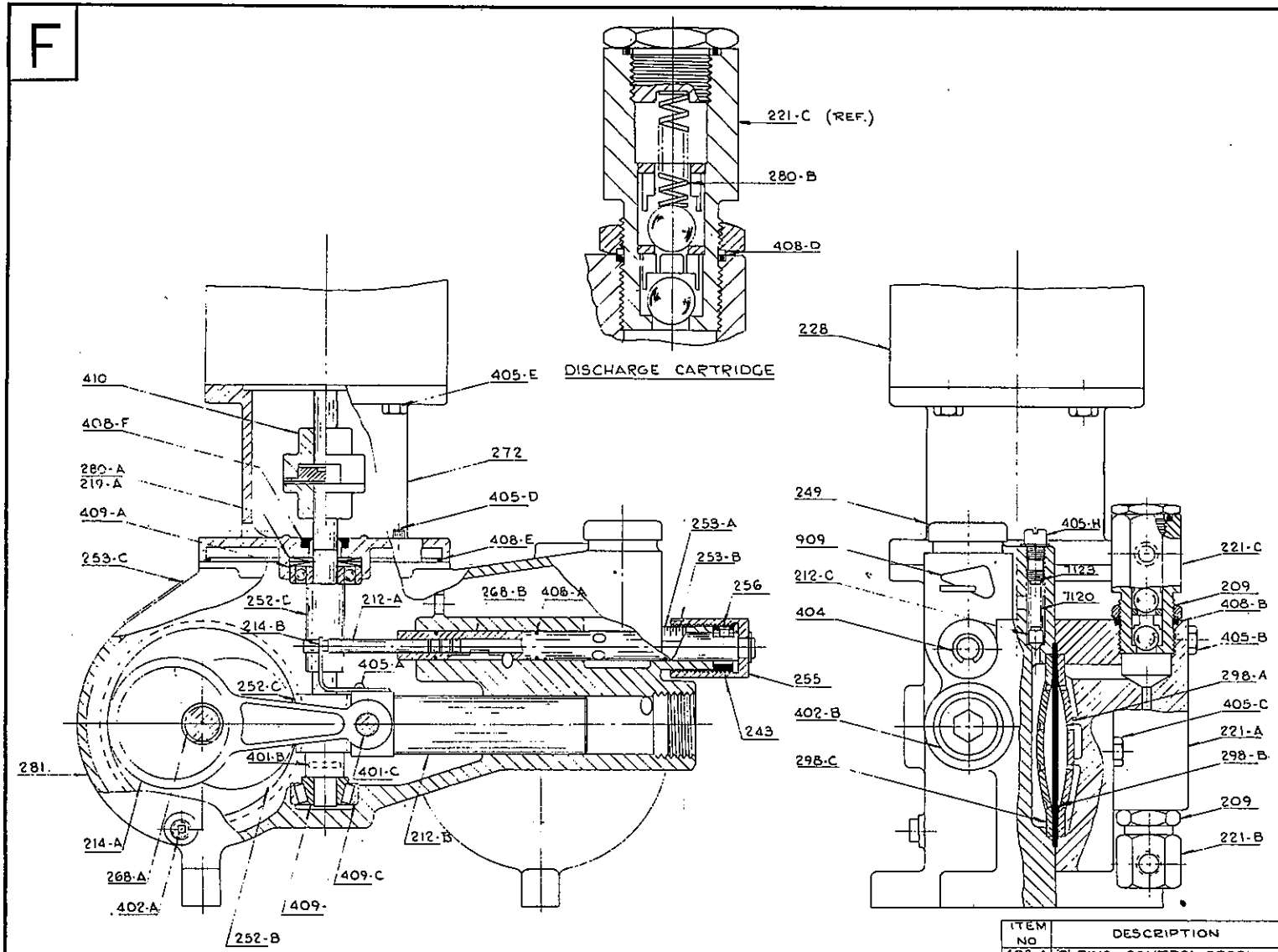

ITEM NO.	DESCRIPTION
209	LOCKING NUT
212-A	CONTROL PLUNGER
212-B	PLUNGER
212-C	POPPET - RELIEF VALVE
7120	SPRING - RELIEF VALVE
7123	ADJUSTING SCREW
214-A	CONNECTING ROD
214-B	LINKAGE ARM
219-A	WASHER - FLAT
221-A	DIAPHRAGM HEAD
* 221-B	SUCTION CARTRIDGE ASS'Y.
	CONSISTING OF:-
221-D	BODY
224	SEAT
407-B	BALL CHECK
* 221-C	DISCHARGE CARTRIDGE ASS'Y.
	CONSISTING OF:-
221-E	BODY
222	CAP
224	SEAT - BALL CHECK
407-B	BALL CHECK
408-C	'O' RING CAP
228-A	MOTOR
* 252-E	SHAFT - WORM ASSEMBLY
	CONSISTING OF:-
252-D	SHAFT
252-C	WORM
401-B	PIN
409	BEARING CONE
409-A	BEARING
249	RESERVOIR CAP
252-B	WORM GEAR
243	THREADED SLEEVE
253-A	CAPACITY CONTROL PLATE
253-B	CALIBRATION RING
253-C	DATA PLATE
255	CONTROL KNOB
256	SLEEVE SCREW
268-A	GEAR SHAFT
268-B	CONTROL SPOOL
272	FLANGE
280-A	BELLEVILLE WASHER
281	MAIN HOUSING
280-B	DISCHARGE SPRING
298-B	DIAPHRAGM
298-C	CONTOUR PLATE - OIL SIDE
298-A	CONTOUR PLATE - PROCESS SIDE
401-C	WRIST PIN
402-A	DRAIN PLUG
402-B	END PLUG
404	'E' RING
405-H	SCREW PLUG
405-A	LINKAGE SCREW
405-B	BOLT - DIAPH. HD.
405-C	BOLT - DIAPH. HD.
405-D	BOLT - FLANGE MTG.
405-E	BOLT - MOTOR MTG.

ITEM NO	DESCRIPTION
408-A	'O' RING - CONTROL SPOOL
408-B	'O' RING - LOCKING NUT
408-D	BACK UP RING
408-E	'O' RING - HOUSING SEAL
408-F	OIL SEAL
409-C	BEARING CUP
410	COUPLING
909	M.R. LOGO

NOTE:- DISCHARGE CARTRIDGE SPRING (ITEM NO. 280-B) SUPPLIED SEPARATELY. TO BE INSTALLED BY CUSTOMER ONLY IF DISCHARGE PRESSURE IS LESS THAN 50 P.S.I.

* THESE ITEMS ONLY SUPPLIED AS AN ASSEMBLY.

** ITEM 409 AVAILABLE SEPARATELY (409 + 409-C = ONE COMPLETE BEARING)

CHG.	DATE	BY	APPR.	REVISION
C	3-23-66	J.F.B.		ITEM 219 SPACER-DELETED NOT REQ'D ON CASTINGS WITH INTEGRAL HUB. MT-B
B	1-20-65	B.C.M.		ADDED BEARING NOTE ECN 1582
A	10-26-64	S.M.		ITEM NOS. STD'IZED.

DESCRIPTION: m ROY PUMP - MOD. 'B'
NEMA 56C FLANGED DRIVE
S/M (REF.)
SUPERSEDES: C-102-0168-000 DATED 11-18-63
MAT'L-TY

DWN. 3GM | APPR. | DATE 4-16-64 | SCALE 6"=1'-0" | PATT. CODE

MILTON ROY COMPANY

TITLE: m ROY SIMPLEX PUMP PARTS & ASSEMBLY DWG.

DWG. NO. P-102-0303-000

G

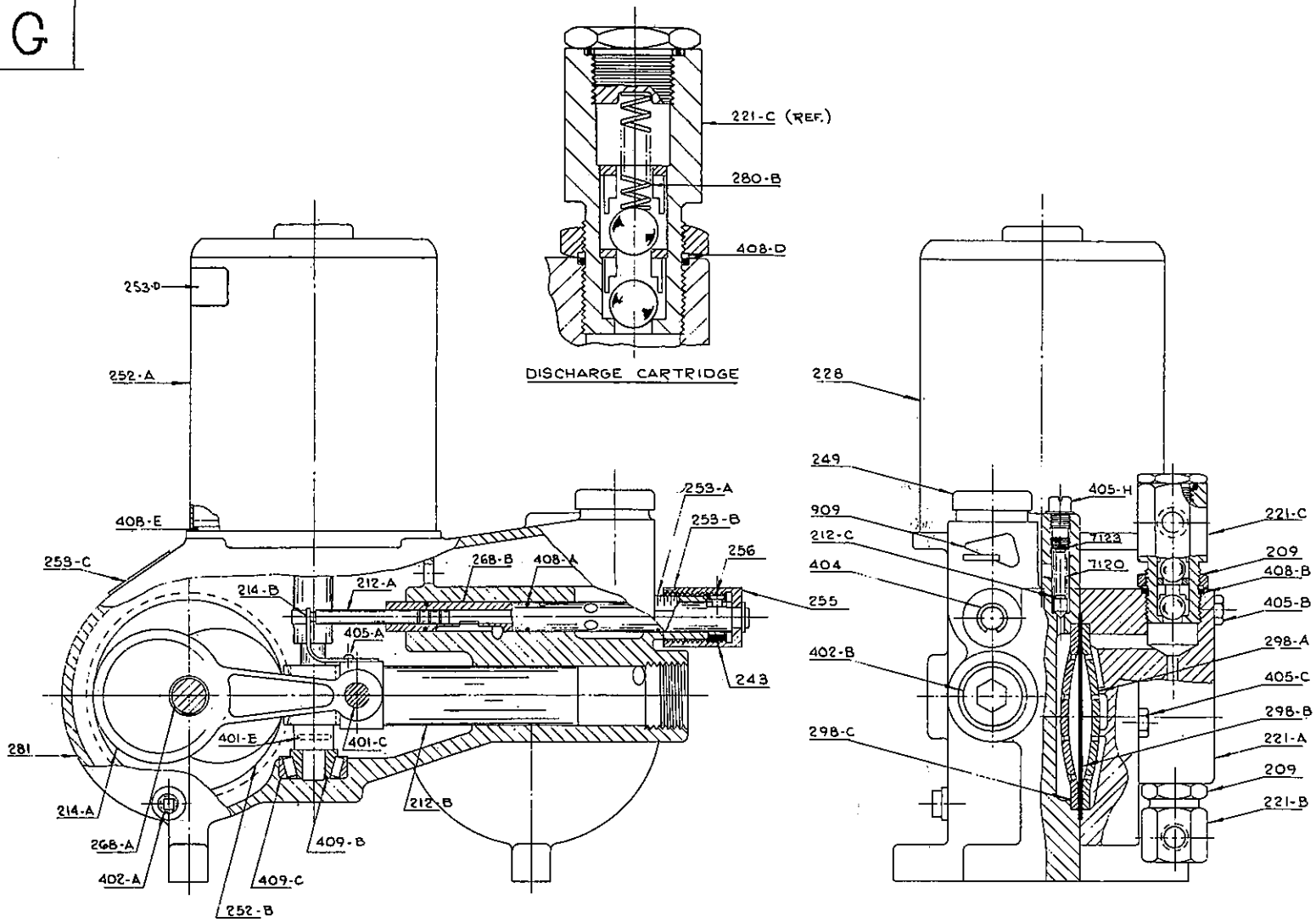

ITEM NO.	DESCRIPTION
209	LOCKING NUT
212-A	CONTROL PLUNGER
212-B	PLUNGER
212-C	POPPET - RELIEF VALVE
7120	SPRING - RELIEF VALVE
7123	ADJUSTING SCREW
214-A	CONNECTING ROD
214-B	LINKAGE ARM
221-A	DIAPHRAGM HEAD
* 221-B	SUCTION CARTRIDGE ASS'Y
	CONSISTING OF:-
221-D	BODY
224	SEAT. BALL CHECK
407-B	BALL CHECK
* 221-C	DISCHARGE CARTRIDGE ASS'Y
	CONSISTING OF:-
221-E	BODY
222	CAP
224	SEAT - BALL CHECK
407-B	BALL CHECK
408-C	'O' RING CAP
* 252-A	MOTOR - WORM ASSEMBLY
	CONSISTING OF:-
228	MOTOR
252-C	WORM
401-B	PIN
409-B	BEARING CONE
243	THREADED SLEEVE
249	RESERVOIR CAP
252-B	WORM GEAR
253-A	CAPACITY CONTROL PLATE
253-B	CALIBRATION RING
253-C	DATA PLATE
253-D	VOLTAGE PLATE
255	CONTROL KNOB
256	SLEEVE SCREW
280-B	DISCHARGE SPRING
268-A	GEAR SHAFT
268-B	CONTROL SPOOL
281	MAIN HOUSING
298-B	DIAPHRAGM
298-C	CONTOUR PLATE - OIL SIDE
298-A	CONTOUR PLATE - PROCESS
401-C	WRIST PIN
402-A	DRAIN PLUG
402-B	END PLUG
404	'E' RING
405-A	LINKAGE SCREW
405-B	BOLT - DIAPH. HD.
405-C	BOLT - DIAPH. HD.
405-H	SCREW PLUG
408-A	'O' RING - CONTROL SPOOL
408-B	'O' RING - LOCKING NUT
408-D	BACK UP RING
408-E	'O' RING - HOUSING SEAL
409-C	BEARING CUP
909	M.R. LOGO

NOTE:- DISCHARGE CARTRIDGE SPRING (ITEM NO. 280-B) SUPPLIED SEPARATELY. TO BE INSTALLED BY CUSTOMER ONLY IF DISCHARGE PRESSURE IS LESS THAN 50 P.S.I.

* THESE ITEMS ONLY SUPPLIED AS AN ASSEMBLY.

** ITEM 409-B AVAILABLE SEPARATELY. (409-B + 409C = ONE COMPLETE BEARING)

CHG.	DATE	BY	APPR.	REVISION
D	3-20-67	J.T.B.		ITEM 253-D ADDED. REQUIRED ONLY ON S/N 40/10 & 20-700-44 WITH CAPACITY 10%
C	3-23-66	J.T.B.		ITEM 213 SPACER DELETED WITH REV. OF CASTINGS WITH INTEGRAL HOD. MT-B
B	1-21-65	SGM		ADDED BEARING NOTE
A	10-25-63	SGM		ITEM NOS REVISED TO STD.

DESCRIPTION: MOD.'B' mROY SIMPLEX PUMP — INTEG. MTR.
S/N (REF.)
SUPERSEDES: C-102-0167-000 DATED 11-12-63
MAPL-YY

DWN.	APPR.	DATE	SCALE	PATT. DWG.
SGM		4-16-64	~	

MILTON ROY COMPANY

TITLE: mROY SIMPLEX PUMP PARTS & ASSEMBLY DWG.

DWG. NO. P-102-0304-000

H

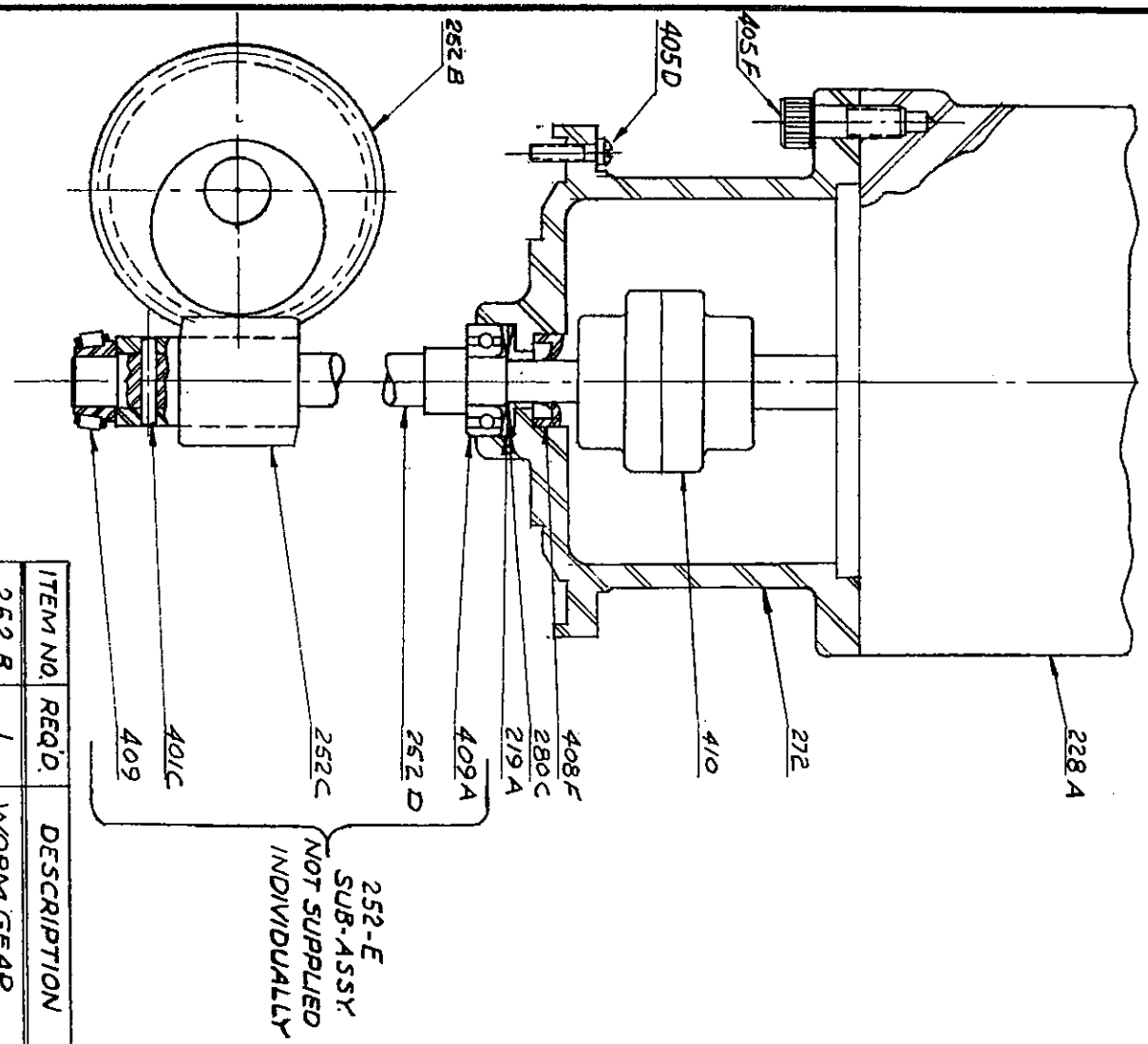

ITEM NO.	REQ'D.	DESCRIPTION
252-B	1	WORM GEAR
228 A	1	MOTOR
272	1	ADAPTER
410	1	COUPLING
408 F	1	SEAL
280 C	2	BELLEVILLE WASHER
219 A	1	FLAT WASHER
252 E	1	STUB SHAFT ASS'Y. CONSISTING OF:
252 D	1	DRIVE SHAFT
252 C	1	WORM
401 C	1	PIN
409 A	1	BALL BEARING.
409	1	BEARING. CONE
405-F	4	BOLT
405-D	4	ADAPTER SCREW

CHG.	DATE	BY	APPR.	REVISION
C	4-22-69	J.E.M.		CHANGED TO INCORPORATE NEW MOTOR FLANGE ADAPTER DESIGN.
B	10-25-64	GM		ITEM 409 WAS REF & NOT SUPP. WITH ASSY.
A	3-15-63	J.E.M.		MADE SUITABLE FOR BOTH SIMPLEX & DUPLEX PUMPS.

DESCRIPTION NEMA 56C FLANGE MOUNTED MOTORS-m ROY SIMPLEX & DUPLEX.

B/M (REF.)

SUPERSEDES D-102-0086-000 DATED 9-21-62

MAT'L-YY

DWN.	APPR.	DATE	SCALE	PATT. CODE
JPB		12-7-62	HALF	

MILTON ROY COMPANY

TITLE m ROY FLANGED DRIVE ASSY. & PARTS

DWG. NO. P-102-0086-000

15.108

J

15.128

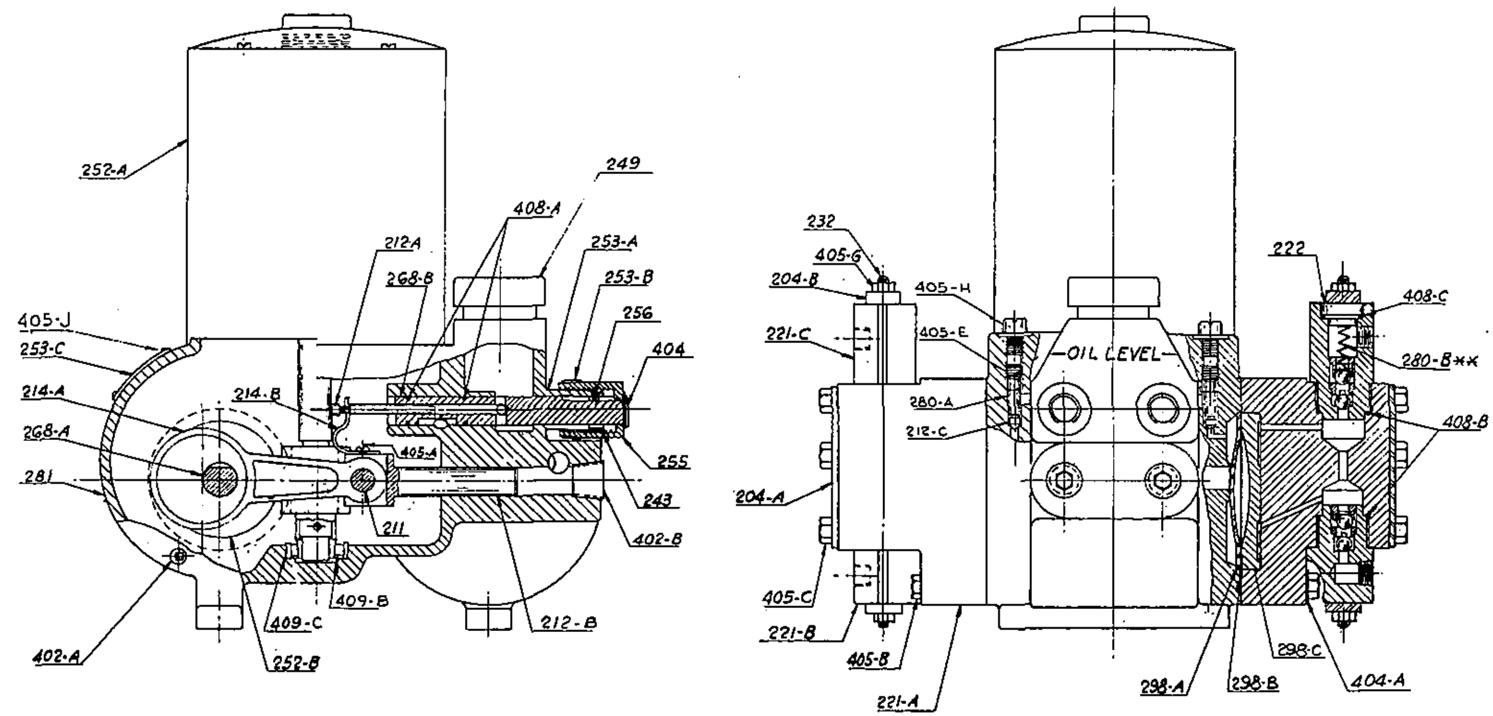

PART NO.	DESCRIPTION
204-A	PLATE-HEAD BACK-UP
204-B	PLATE-COMPRESSION
211	WRIST PIN
212-A	CONTROL PLUNGER
212-B	PLUNGER
212-C	POPPET-RELIEF VALVE
280-A	SPRING-RELIEF VALVE
405-E	ADJ. SCREW-RELIEF VALVE
214-A	CONNECTING ROD
214-B	LINKAGE ARM
221-A	DIAPHRAGM HEAD
* 221-B	SUCTION CARTRIDGE ASSEMBLY CONSISTING OF:
221-D	BODY
224	SEAT
292	RETAINER
407-B	BALL CHECK
* 221-C	DISCHARGE CARTRIDGE ASSEMBLY CONSISTING OF:
221-E	BODY
222	CAP
224	SEAT
292	RETAINER
407-B	BALL CHECK
408-C	'O' RING
232	STUD
243	THREADED SLEEVE
249	RESERVOIR CAP
* 252-A	MOTOR WORM ASSEMBLY CONSISTING OF:
228	MOTOR
252-C	WORM
401-B	PIN
409-B	BEARING CONE
252-B	WORM GEAR
253-A	CAPACITY CONTROL PLATE
253-B	KNOB GRADUATION PLATE
253-C	DATA PLATE
255	CONTROL KNOB
256	SLEEVE SCREW
268-A	GEAR SHAFT
268-B	CONTROL SPOOL
280-B	DISCH. CART. SPRING **
281	MAIN HOUSING
298-A	CONTOUR PLATE
298-B	DIAPHRAGM
298-C	CONTOUR PLATE
402-A	DRAIN PLUG
402-B	END PLUG
404	'E' RING
405-A	LINKAGE SCREW
405-B	SCREW-DIAPH. HD. - SHORT
405-C	SCREW-DIAPH. HD. - LONG
405-J	DRIVE SCREW
405-G	NUT-STUD
405-H	SCREW PLUG-RELIEF VALVE
408-A	'O'RING-CONTROL SPOOL
408-B	'O'RING-CARTRIDGE
404-A	WASHER
409-C	BEARING CUP
909	MILTON ROY LOGO

** DISCHARGE CARTRIDGE SPRING (ITEM 280-B) SUPPLIED SEPARATELY. TO BE INSTALLED BY CUSTOMER ONLY IF DISCHARGE PRESSURE IS LESS THAN 50 PSI.

* THESE ITEMS ONLY SUPPLIED AS AN ASSEMBLY

CHG.	DATE	BY	APPR.	REVISION
B	9-16-65	J.P.B.		ADDED ITEM 404-A
A	3-18-65	J.P.S.		ITEM 217 SPACER REMOVED NOT REQ. ON CASTINGS WITH INTEGRAL HUB. MT-3

DESCRIPTION mROY PUMP - DUPLEX - MOD. A, PLASTIC LIQUID END.

B/M (REF.)

SUPERSEDES 102-0156-000 ECN 1512

MAT'L-QTY

DWN. | APPR. | DATE | SCALE ~ | PATT. CODE

MILTON ROY COMPANY

TITLE mROY DUPLEX PUMP PARTS & ASSEMBLY DWG.

DWG. NO. D-102-0293-000

mRoy® accessories

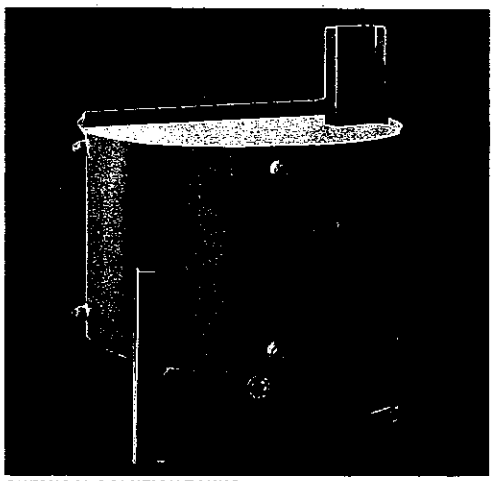

CHEMICAL SOLUTION TANKS

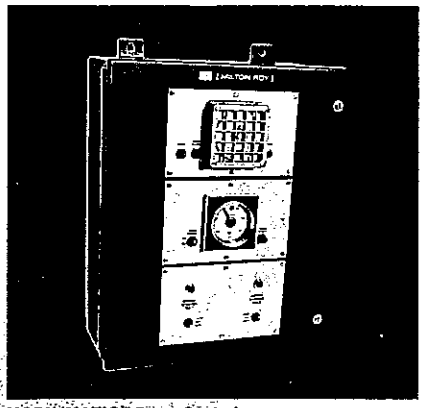

MODU/MATIC™ Pump Control

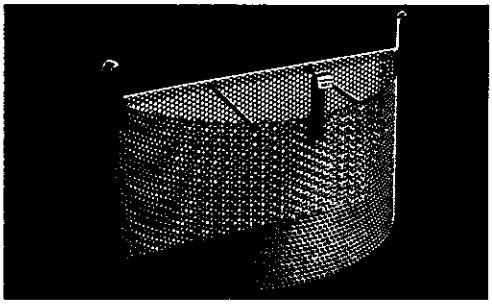

DISSOLVING BASKETS

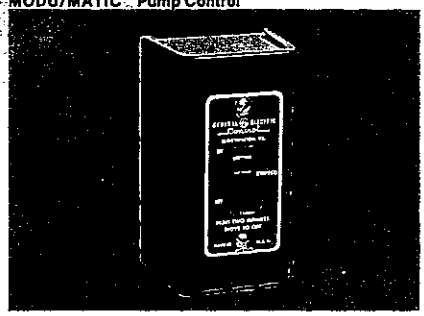

STARTING SWITCHES

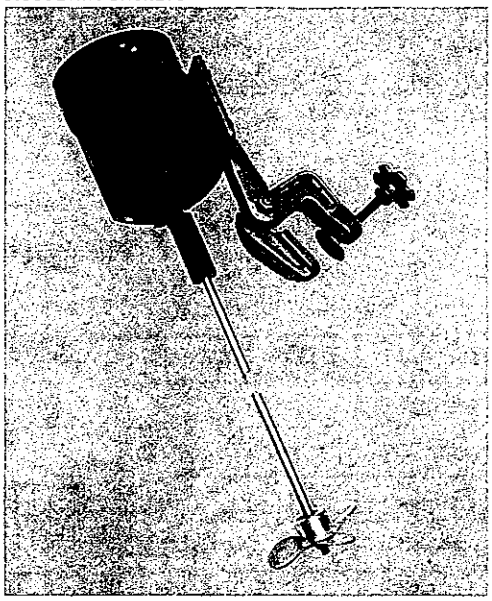

AGITATORS

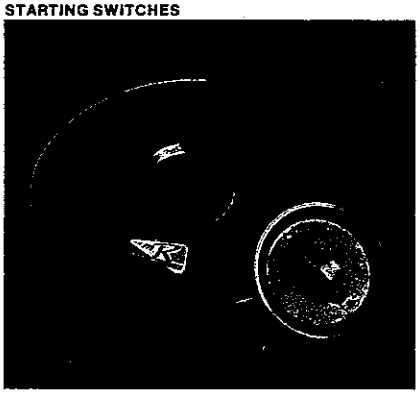

DONUT FLOATS

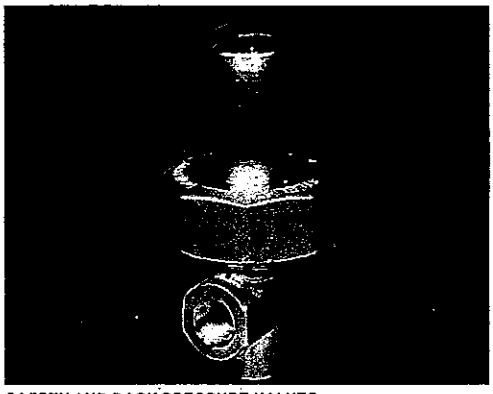

SAFETY AND BACK PRESSURE VALVES

Milton Roy Company can supply accessories to make the mRoy more effective and useful in every application.

CHEMICAL SOLUTION TANKS

Steel, stainless steel, plastic and plastic lined chemical solution tanks are offered in capacities from 50 to 1000 gallons. 50 and 100 gallon sizes are available from stock.

MODU/MATIC™ Pump Control

Pre-packaged control units feature a choice of modules for low liquid level detection, alarm, automatic shutoff, timed pumping cycles, timed accessory cycles, and overload protection.

STARTING SWITCHES

Toggle type motor starting switches with overload protection suitable for pump or agitator motors. Single phase, 60 Hz, 115 VAC. Magnetic starters are available for 3-phase motors.

DONUT FLOATS

Steel and polystyrene floats are available to prevent air from contacting surface of liquid in tank.

DISSOLVING BASKETS

Dissolving baskets for holding dry chemicals while they are being dissolved. Steel, 304 SS and 316 SS baskets are available.

AGITATORS

Motor-operated agitators with stainless steel shafts and propellers. Equipped with 1/4 or 1/3 HP, single phase, 60 Hz, 115 VAC motors. Operates in 50 to 250 gallon tanks. Other motor characteristics are available.

SAFETY AND BACK PRESSURE VALVES

Economical, leakproof and corrosion-resistant safety valves to protect system where required by plant safety rules.* Sizes from ¼" to 1", relieve at pressures to 1500 psi. Back pressure valves provide 200 psi back pressures to insure accurate metering and to prevent syphoning. Materials contacting liquids are low-carbon steel, 316 SS, CA-20, alloys HB and HC or PVC. Teflon ** diaphragm isolates operating parts from liquid.

* An internal relief valve in the pump provides adequate pump protection.

**A Dupont registered trademark.

MILTON ROY COMPANY
Flow Control Division
201 Ivyland Road ☐ Ivyland, Pa. 18974 ☐ (215) 441-0800 ☐ Cable: ROYPUMP ☐ Telex 083-4348

Durion Company Installation Operation and Maintenance of Mark II Durcopumps

INSTALLATION OPERATION AND MAINTENANCE OF MARK II DURCOPUMPS

bulletin P-10-200 j

UNIT PROCESS
Seattle
206-827-0432

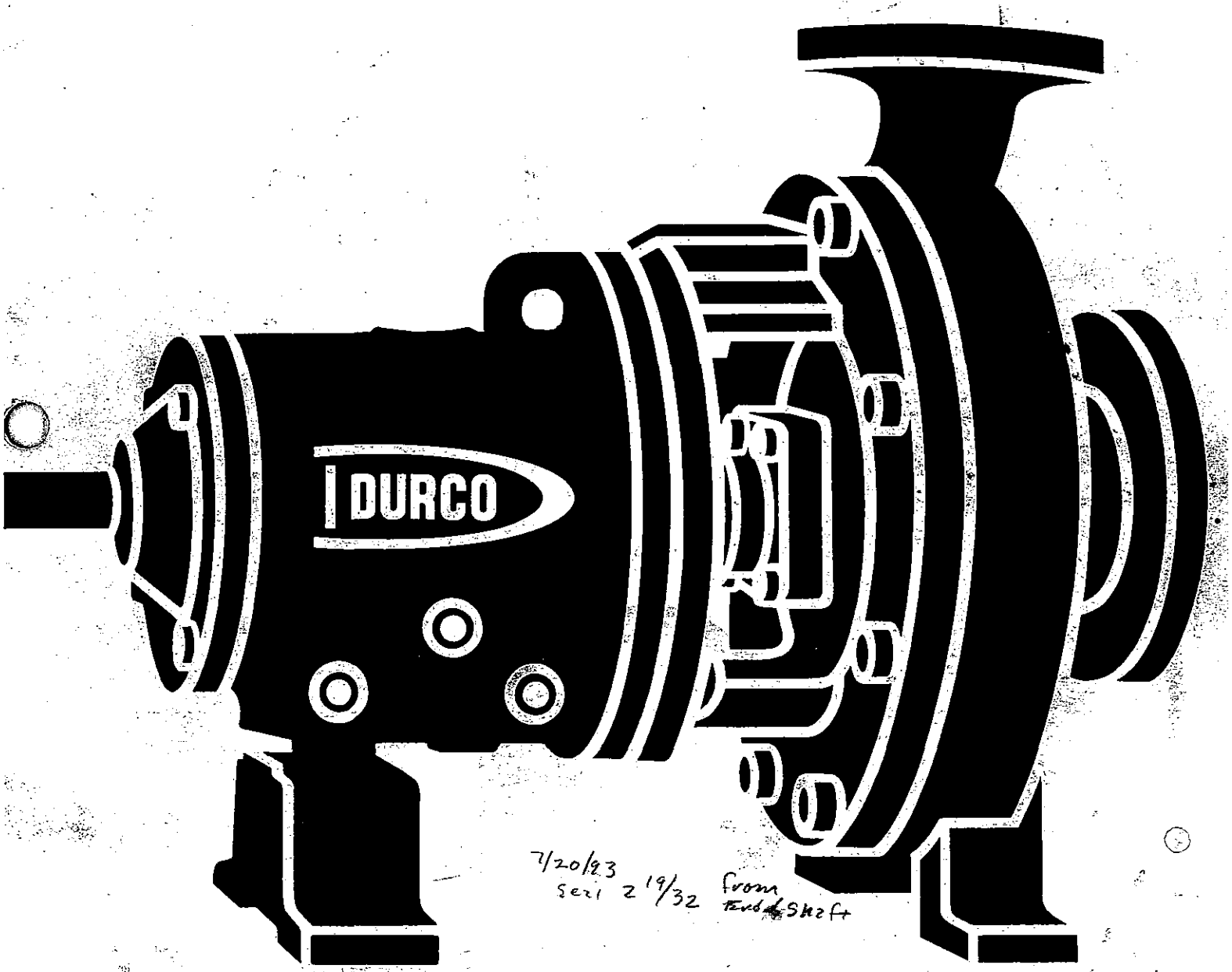

7/20/93
Seal 2 19/32 from end of shaft

3 x 2 - 8 MARK II GRP II w/ mech. seal.
S/N 231865 + 236128
↓
PO # 19109 20002

THE DURIRON COMPANY, INC., DAYTON, OHIO DURCO

SECTION I

MARK II STANDARD DURCOPUMP

This manual contains instructions for the installation, operation, and maintenance of the MARK II Standard and Self-priming Durcopumps. As pump service conditions and specifications vary considerably in pump installations, this manual cannot possibly cover every situation, but it is hoped that the information included will serve as a guide. Should questions arise, or startup problems occur, it is suggested that you contact the Durco Sales Engineer in the nearest Durco District office. For your convenience, we have listed these offices on the last page of this manual.

INSTALLATION

ALIGNMENT

The centerline of the pump shaft must be aligned with the centerline of the motor shaft. The accuracy required for this alignment varies with the type of coupling involved. The shear type using a non-metallic resilient center or spacer member is recommended, as this type is easily aligned to manufacturers tolerances by using a steel straightedge. Other types of couplings require closer alignment and the detailed instructions are included in the box containing the coupling spacer.

Alignment is the responsibility of the installer. DO NOT ASSUME that rough factory alignment has been maintained in transit. Any baseplate or assembly, regardless of the size or sturdiness, may be slightly distorted during shipment or in handling during installation. Therefore, after the baseplate is leveled, a rough alignment check should be made using a steel straightedge. If an adjustable type base has been supplied, the unit is now ready for piping. If a rigid poured foundation is used, the permanent installation can now be accomplished. After piping, final alignment is made. Motor fasteners are in accordance with NEMA Standards. The pump can be moved to accomplish final alignment by loosening the hold down fasteners, and by loosening cap screw #136 (GROUP II AND GROUP III Pumps).

If a spacer type coupling has been furnished, the spacer portion will normally be removed prior to shipment. This will allow rotational check of the motor prior to hookup of the pump and will alert installation personnel to the need for final alignment of pump and motor shafts.

FOUNDATION

DURCO ADJUSTABLE BASEPLATE - The low vibration level in MARK II Durcopumps allows use of foot-mounted adjustable baseplates. The baseplate is merely set on a flat surface, with no tie-down bolts or other means of securing it to the floor (Figure A). If a stilt-mounted baseplate is furnished, merely adjust the feet so that the top surface of the baseplate is level.

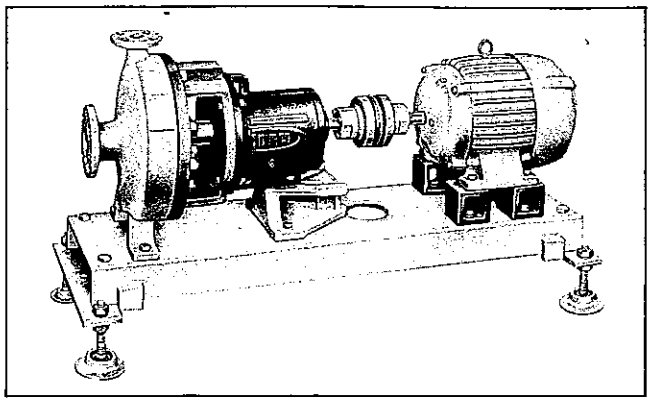

FIG. A

GROUTED TYPE - When a rigid foundation is to be used, the entire pumping unit should be mounted on a concrete foundation and accurately leveled with wedges or shims. The baseplate may then be grouted to the foundation. After the concrete hardens, the wedges should be removed and the unit tightened down ensuring that it is level in all directions. The location and size of the foundation bolts are shown in dimension drawings.

PIPING

The suction line should have a straight run into the pump of a length equivalent to at least ten (10) times its diameter. The suction line should be no smaller than the suction flange, and should have no high points in which air pockets can form. Avoid the use of throttling valves, diaphragm valves, and line strainers in the suction line when possible. NEVER place a valve directly on the suction nozzle of the pump. If a reducer is required it must be the eccentric type.

When the static discharge head is high, a check valve on the discharge side of the pump (standard pump only) will prevent water hammer and undue pressure on the stuffing box when the pump is stopped.

Normally, a shut-off valve is installed in both the suction and discharge lines so that the pump can be isolated for maintenance. All piping should be independently supported, accurately aligned and, preferably, connected to the pump by a short length of flexible piping. The pump should not have to support the weight of the pipe or compensate for misalignment. All piping must be tight. Standard pumps may air-bind and self-priming pumps may fail to prime if air is allowed to leak into the piping.

MOTOR ROTATION

IT IS ABSOLUTELY ESSENTIAL THAT THE ROTATION OF THE MOTOR BE CHECKED BEFORE CONNECTING THE SHAFT COUPLING. Incorrect rotation of the pump for even a short time can dislodge the impeller and damage the impeller or casing, or both. The pump shaft must turn clockwise when viewed from the motor end.

PREPARATION FOR OPERATION

LUBRICATION

The correct oil level is obtained with the Trico Oiler in its lowest position, which results in the oil level being at the top of the oil inlet pipe nipple. To fill bearing housing to proper oil level, remove the plastic bottle from the Trico Oiler base and pour oil slowly until the base is full. Then fill the plastic bottle with oil, invert, and replace it in the base. Oil must be visible in the bottle at all times.

Oil lubrication is standard unless otherwise specified. Before operating, fill bearing housing to required level using the following amounts:

PUMP SIZE	FLUID oz.	FLUID (kg)	SAE	at *DEGREES °F	°C
Group I	6 to 7	(.17 - .20)	20	125	(52)
Group II	8 to 9	(.22 - .25)	30	125-150	(52-66)
Group III	24 to 25	(.67 - .70)	40	150-180	(66-82)

Grease lubrication is optional. When specified, bearing housings are provided with grease fittings and single shielded bearings. Such units will not include oiler and slinger. Grease lubricated bearings are packed prior to shipment. Replacement bearings should be grease packed to fill the void space within the races, most of which will be extruded on start-up to form an adjacent reservoir.

The skin temperature of housing at bearing is 200°F (93°C) maximum. Recommended grease: Chevron BRB#2, Aeroshell #16, Exxon Andok-260 or similar type.

Sealed bearings are furnished when specified and are grease packed by the bearing manufacturer. Such bearings should not be relubricated and should be replaced on a regular maintenance schedule. Skin temperature of bearing housing should not exceed 200°F (93°C).

When oil mist lubrication is specified, Group I and Group II bearing housings are furnished with a single inlet tap, weep holes at inboard and outboard bearings, and bottom drain. Group III pumps include two inlet taps. Complete oil mist systems can be supplied where existing systems are not available. Skin temperature of housing at bearing should not exceed 180°F (82°C).

During the first few hours of operating, bearing temperatures should level off and usually drop slightly, after the initial run-in period. If temperatures continue to rise after a few hours of continous operation, an adequate supply of lubricant should be checked. If oil is used, the oil level should allow the slinger on Group II and Group III pumps to dip ⅜" (10mm) to ½" (13mm). Group I level should be approximately ¼" (6mm) above the outer bearing races.

NOTE: Be sure to check the lubrication of the motor bearings and the flexible coupling, where required. Special instructions are furnished for the coupling, where required, in the instruction envelope.

STUFFING BOX SEAL

STANDARD PACKING - If the pump is furnished with packing, it will be necessary to install the packing and the Teflon seal cage. When installing these items, twist the rings sideways just enough to get them around the shaft. Do not attempt to pull the rings straight out to get them over the shaft, as this will damage them. Install 3 rings of packing, followed by the TFE seal cage, then two more rings of packing. Seat each ring individually into the stuffing box. As each ring is added, stagger the joints 90 degrees (1.5 rad.). When special grafite or foil packings are supplied, special instructions will be furnished.

Some form of packing lubrication is normally required. In some cases, the lubricating qualities of the liquid pumped are sufficient. If this is not the case, a line must be connected for clean lubrication from an external source. A grease cup can also be used, providing the pumped liquid is not subject to contamination by the grease.

In abrasive services, it is often desirable to install a lip seal into the bottom of the stuffing box, followed by seal cages and packing (See Figure B). A small flow of clear flush liquid is then supplied at all times during pump operation. Pressure and flow must be regulated so that no more than 1-2 gallons per hour (.2 - .5m³/h) of the flush liquid enters the product. This may be accomplished by careful pressure regulation, or by use of a purge type rotometer.

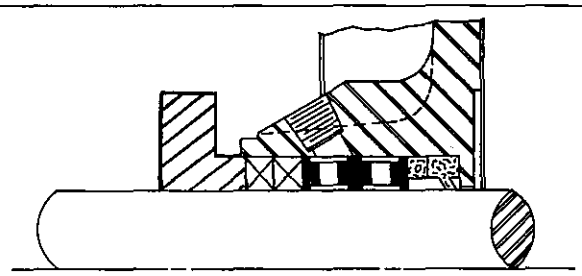

SPECIAL PACKING ARRANGEMENT WITH FLUSH FOR EXTREMELY ABRASIVE SERVICES
FIG. B

MECHANICAL SEALS - MARK II pumps are designed to handle virtually every type of mechanical seal available, and with little or no modification. When pumps are ordered with mechanical seals, a set of seal manufacturer's operating instructions and a seal drawing will be shipped with the pump. Figure C illustrates several typical seal and accessory piping arrangements, together with appropriate notes and recommendations. Figure D illustrates a

*Skin temperature of housing at bearing should not exceed 180°F (82° C) with oil lubrication. Thirteen inch pumps at 3500 rpm require coolant to bearing housing jackets. All pumps require bearing cooling when wet end temperatures exceed 400° F (204°C). Coolant to jackets should be 3 to 5 GPM (.7 to 1.1 m³/h) at 100°F (38°C) maximum.

typical by-pass line installation with pumped liquid by-pass from discharge to flush inlet at the stuffing box. Other by-pass arrangements are provided, some more complex, including heat exchangers, strainers, valves, and other accessories. Examples of these are illustrated in Figures E and F. Normally these systems are assembled at the factory, but occasionally they are dismantled to prevent damage during shipment. In the latter cases, an assembly sketch or schematic diagram is included with the components.

Be certain that the pump suction valve is open, that all piping is properly connected and that all flush systems or circulating systems are functioning before starting the pump. Very rapid seal failure can occur if the seal runs dry—even if only for a few seconds! If there is anything questionable or unusual about the seal assembly or system, it is suggested that you telephone the nearest Durco sales office or the office of the mechanical seal representative for clarification.

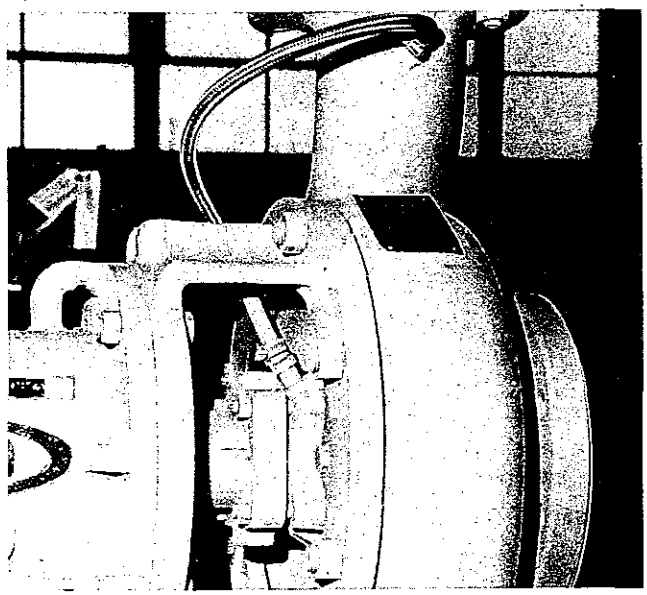

FIG. D

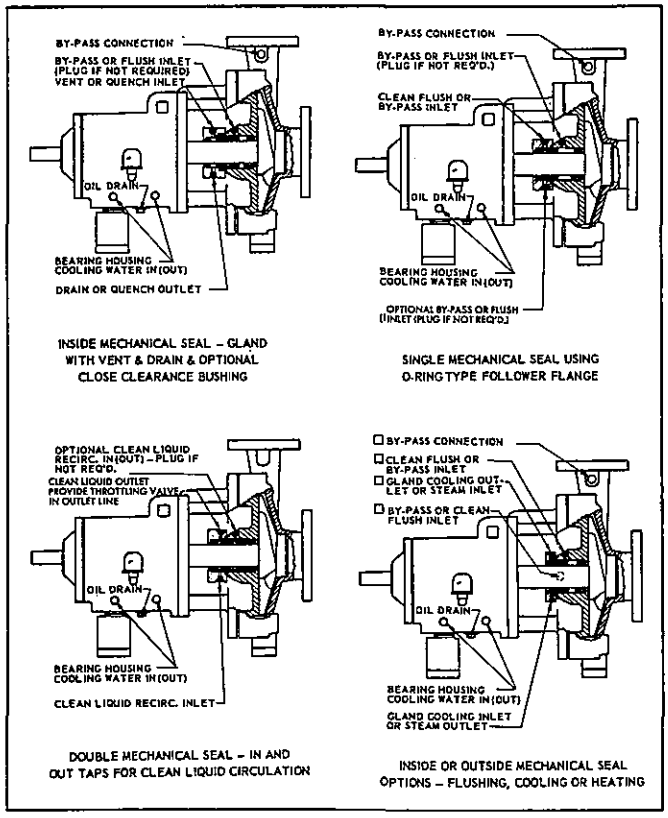

FIG. C

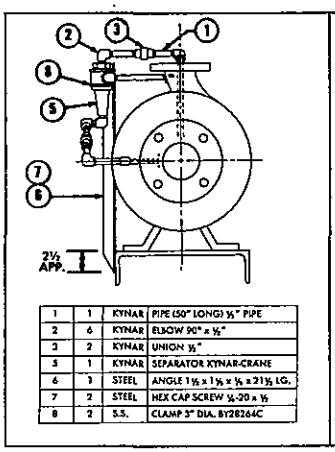

1	1	KYNAR	PIPE (50" LONG) ½" PIPE
2	6	KYNAR	ELBOW 90° x ½"
3	2	KYNAR	UNION ½"
5	1	KYNAR	SEPARATOR KYNAR-CRANE
6	1	STEEL	ANGLE 1½ x 1½ x ⅛ x 21½ LG.
7	2	STEEL	HEX CAP SCREW ¼-20 x ½
8	2	S.S.	CLAMP 3" DIA. BY28264C

FIG. E

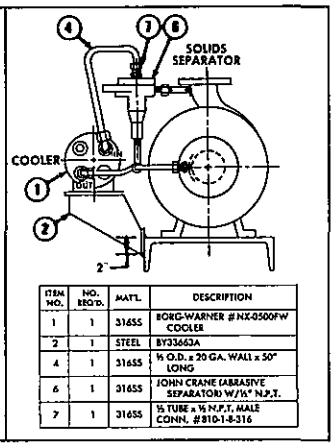

ITEM NO.	NO. REQ'D.	MAT'L	DESCRIPTION
1	1	316SS	BORG-WARNER #NX-0500FW COOLER
2	1	STEEL	BY33663A
4	1	316SS	½ O.D. x 20 GA. WALL x 50" LONG
6	1	316SS	JOHN CRANE (ABRASIVE SEPARATOR) W/½" N.P.T.
7	1	316SS	½ TUBE x ½ N.P.T. MALE CONN. #810-1-8-316

FIG. F

ROTATE SHAFT

As a final step in preparation for operation, it is important to rotate the shaft by hand to be certain that all rotating parts move freely, and that there are no foreign objects in the pump casing.

OPERATION

START–UP

The following procedure is recommended for starting MARK II Durcopumps:

a. Open suction valve to full open position.
b. Open valve on discharge a slight amount.
c. Make certain that pump is primed.
d. Start driver (motor, turbine, etc.)
e. After pump is running, open valve in discharge to full open.

PERIODIC INSPECTION

Periodic inspection should include the following:

a. Bearing lubrication - Check to be sure that there is oil in Trico Oiler.
b. Packing - Be certain that the packing is lubricated with a high melting point, acid-resistant lubricant. Check for crystallization of solution or embedded abrasives. Be sure that packing is proper grade.
c. Leakage - Be sure that the gasketed joints at casing drain, casing cover, and at suction and discharge connections are free from leaks.
d. Bearing wear - Check bearings for excessive wear. Worn bearings may result in excessive shaft runout, necessitating frequent re-packing of stuffing box.
e. Alignment - Check shaft for proper alignment, and the baseplate for levelness.

PUMP RECORDS

Maintain data cards or pump records whenever possible. This will provide ready access to information for ordering spare parts, and for evaluating pumps and mechanical seal performance. Information to be included in these records should be:

a. Pump equipment number and serial number.
b. Pump model number, impeller diameter, material of construction.
c. Mechanical seal manufacturer, type and code.
d. Motor horsepower and speed of operation.
e. Service conditions.
f. Frequency of operation.
g. Record of maintenance including parts usage and general condition of pump.

MAINTENANCE

Refer to the cross section drawings and parts list, pages 12 & 13. Loosen the cap screws in both halves of the spacer coupling and remove the spacer portion of the coupling. Remove cap screws holding bearing housing foot to baseplate. Remove hex nuts (#115) from casing studs, back power end assembly out of casing, and transfer to shop for further disassembly.

When power end unit arrives in shop, carefully remove the pump hub of the coupling. The impeller (#103) is removed from the shaft by turning sharply counterclockwise while holding shaft stationary. A special impeller wrench can be provided to facilitate removal of the impeller. (See Figure G) This type of device can be duplicated by merely welding a steel bar to an old coupling hub.

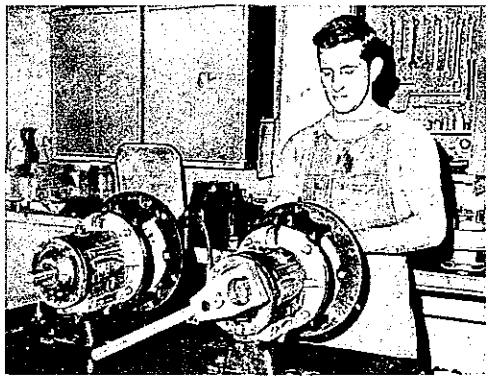

1. After removal from the rest of the pump, the power end can be taken to the shop for easy maintenance. The key and wrench are then mounted on the shaft with the wrench pointing to the right when viewed from the impeller end of the pump.

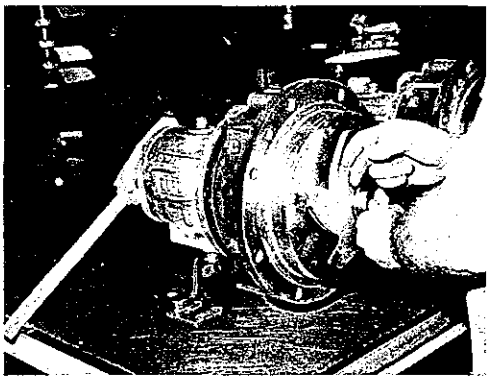

3. The gasket seal should be broken and the impeller should start to move easily along its threads after several sharp raps.

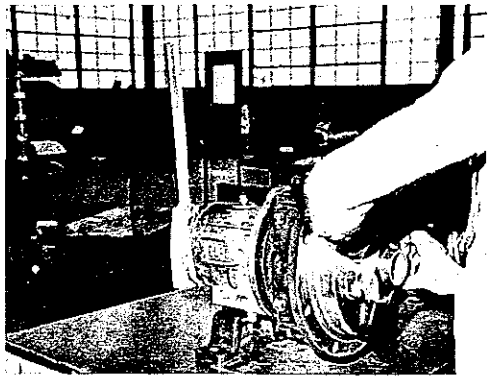

2. Grasping the impeller firmly, spin the wrench quickly in a counter-clockwise direction so that it makes sharp contact with the bench.

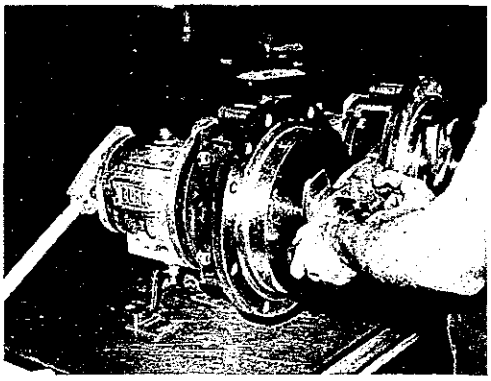

4. The impeller is then easily removed. The procedure can be reversed, moving the wrench in a clockwise direction, to ensure accurate feeler guage measurements when reinstalling the impeller.

FIG. G

The flange nuts (#111) retaining the mechanical seal follower flange are removed. This allows the mechanical seal stationary face to be backed away from the end of the stuffing box. If the pump is packed, remove the gland nuts (#111) and slide the packing gland (#110) back on the shaft. Remove packing (#113) and seal cage (#112).

The two cap screws (#140) retaining the rear cover plate (#106) are removed and the rear cover plate is *carefully* removed. The set screws which lock the mechanical seal to the shaft are then loosened and the seal rotating unit is removed. If the pump was furnished with a hook type sleeve, the rotating unit can be removed after the sleeve has been slipped off the shaft. Be certain to measure and record the position of the rotating unit on the sleeve, as a replacement rotating unit of the same type can merely be relocated at the same position on the same or on a new hook type sleeve. The stationary seat and follower flange are then *carefully* slid off the end of the shaft. If the pump is being maintained for mechanical seal replacement only, no further disassembly is required. The pump can be reassembled by merely reversing the preceding steps. To facilitate relocating the rear cover plate (#106), it is suggested that a stud be placed in one of the cap screw (#140) holes in the rear cover plate (#106).

If shaft or bearing replacement is required, remove the vented drain plug (#134) and drain oil from bearing housing (#119). Remove bearing cover cap screws (#138) and outboard bearing cover (#123). The entire shaft and bearing assembly can then be slid out the outboard end of the bearing housing. The bearings can then be checked and replaced if necessary.

To remove the outboard bearing (#121), raise the tab on the bearing lockwasher (#125) and remove the bearing locknut (#124) and lockwasher. The bearing can then be removed using an arbor press. The inboard bearing (#120) should also be removed in an arbor press. The inboard and outboard oil seals (#118 & #129) are pried out, and new oil seals are pressed into place.

The shaft (#105) should be carefully inspected. If in good condition, the inboard bearing (#120) and outboard bearing (#121) can be installed using an arbor press. Both bearings have a slight interference fit, so care must be taken to ensure that the outboard bearing is pressed firmly home against the shaft shoulder. The bearing lockwasher (#125) is then slid into position, and the bearing locknut (#124) is tightened firmly. Bend the tab of the lockwasher that lines up with a milled slot in the locknut. An alternate method of installing bearings is to heat them in a 200°F (93°C) oven for 2 hours, then place them in position on the shaft. If this method is used, the bearing locknut should be drawn up tight against the outboard bearing and left there until the bearing cools. This will retain the bearing in proper position against the shaft shoulder. The locknut is removed, the lockwasher installed, and the locknut reassembled and tightened firmly. The tab of the lockwasher that lines up with a milled slot in the locknut is then bent over.

ASSEMBLY OF MARK II PUMPS

After bearings are mounted, reassembly is simply a reversal of the disassembly procedure. The bearing and shaft assembly is inserted into the bearing housing. The outboard bearing has a snap ring assembled to the outer race. This is a shim retainer used when adjusting the impeller running clearance. No shims should be present at this point.

The rear cover plate (#106) is assembled to the bearing housing adapter (#108) or bearing housing (#119) in Group I pumps, and the two retaining cap screws (#140) are drawn up firmly. If the pump is furnished with a hook type sleeve, it should now be assembled, using an ample amount of Molycote or similar lubricant on the O.D. of the shaft and the I.D. of the sleeve. It is always advisable to use a new impeller gasket (#104) each time the pump is disassembled for major maintenance. The impeller (#103) is carefully threaded onto the end of the shaft, and an impeller wrench can be used to assist in tightening the impeller. The running clearance of the impeller is now set. Make certain that the shaft is all the way forward so that the snap ring is snug against the end of the bearing housing. The clearance between the impeller vanes and the rear cover plate is measured with a feeler gauge. The impeller clearance should be set at .015" (.38mm) *minimum* for pumps handling liquids at temperatures up to 100°F (38°C). If the pump will be on intermittent service at elevated temperatures, this clearance should be *increased* .002" (.05mm) for every 50°F (10°C) above 100°F (38°C). To obtain the proper thickness of shims required, subtract the desired clearance from the clearance measured. (Example, feeler gauge shows .030" (.76mm) minimum between impeller vanes and rear cover plate. Pumpage temperature is 250° F (121°C). Desired clearance @ .015 (.38mm) + .006 (.15mm) = .021" (.53mm). Shim thickness required = .030 (.76mm) — .021 (.53mm) = .009" (.23mm). The snap ring is removed and the required shims are slid onto the outboard bearing. The snap ring is returned to its original position in the groove. Cork bearing cover gaskets (#126) of total thickness equal to shim thickness plus snap ring thickness are then applied over the shims and snap rings. The outboard bearing cover (#123) is reassembled and the cap screws (#138) are drawn up snugly. The clearance between the impeller vanes and rear cover plate is rechecked to make certain it is a minimum of .015" (.38mm). The impeller running clearance is now *permanently set.*

The following procedure should be used for installing John Crane Type 9 or 9T, and Durametallic Type RO or ROTT mechanical seals with clamped

seats. For other types of mechanical seals, refer to the seal drawings accompanying the pump.

To install the mechanical seal, the shaft or sleeve should be scribed or marked (if not previously marked) by holding a scale or marker firmly and squarely against the end of the stuffing box and rotating the shaft. The impeller and rear cover plate are then removed. The new or relapped stationary seat of the mechanical seal is carefully inserted into the follower flange. A drop of oil is applied to the face of the stationary seat and spread uniformly over the face with a clean tissue. The follower flange and stationary seat are then carefully slid onto the shaft or sleeve. The rotating unit is installed next. A tapered cone, easily fabricated in the maintenance shop, can be used here to prevent damage to the TFE or elastomer shaft seal. (See Figure H) The cone is threaded to the shaft end, and the rotary is slid onto the shaft and forward until the seal face is at the scribed mark. The set screws (*always* use new ones) are firmly tightened so that the rotating unit cannot slip. The rear cover plate is then carefully reassembled to the bearing housing adapter (bearing housing for Group I pumps). The follower flange is tightened uniformly against the end of the stuffing box. The impeller is then threaded onto the shaft and tightened. The impeller running clearance should be checked, but will normally be exactly as originally set. No further adjustment of the seal or impeller will be required.

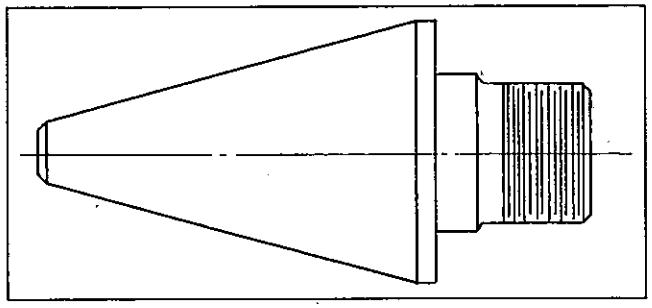

FIG. H

If the pump is packed with molded ring packing, refer to page 3.

The oil breather tube is reassembled into the housing, and the pumping unit is now ready for reassembly into the casing, using a *new* rear cover gasket (#107). Remove the bottle of the Trico oiler and fill bearing housing with oil to proper level (refer to page 3). The pump hub of the coupling is replaced on the shaft extension and the spacer portion is reassembled into the coupling and firmly tightened. Check coupling with a steel straightedge to determine whether or not it returned to alignment. Rotate the shaft by hand to be certain all parts rotate freely. Reconnect any external piping or accessory equipment that is a part of the pump installation. Refer to startup procedure, Section I.

SECTION II

MARK II SELF-PRIMING DURCOPUMP

The MARK II self-priming pump is basically a standard pump with a special casing, an air separator and a priming chamber. The entire rotating unit (back pullout portion) is identical to that of a MARK II Standard pump. For normal maintenance, the casing, air separator and priming chamber should be left piped up in place.

ALIGNMENT

Refer to Mark II Standard Durcopump, Section I.

FOUNDATION

Refer to Mark II Standard Durcopump, Section I, and dimension drawings, pages 10 and 11.

PIPING

Refer to Mark II Standard Durcopump, Section I. In addition, the following piping recommendations should be followed:

Check valves should not be used in the discharge line, as they retain a head of liquid above them and make it extremely difficult to vent out air and gases from the air separator. If it is absolutely essential that a check valve be used, then some provision should be made to include a small vent line between the air separator and the check valve, returning to the supply tank or sump.

Discharge piping should extend vertically for two or three feet above the pumps to enable the air separator to function properly, and to avoid "splashing over" of the liquid being recirculated during the priming cycle.

Extra care should be taken to be certain that all flanged joints and pipe fittings on the suction piping are completely air-tight. Any leakage in the suction piping system will reduce the efficiency of the self-priming pump and will increase the amount of time required to reach full prime. Suction piping should be no larger than the pump inlet, and should be as short and straight as practical.

MOTOR ROTATION

Be certain to check rotation of motor before connecting spacer portion of coupling. An arrow is cast on the bearing cover (#123) showing proper rotation.

PREPARATION FOR OPERATION

LUBRICATION

Refer to preparation for operation, Mark II Standard Durcopump, Section I.

STUFFING BOX SEAL

The self-priming pump creates a vacuum in the suction piping which allows liquid to be pushed up into the pump. The stuffing box must be sealed so that air will not leak into the pump and break the vacuum. Where packing is used, liquid must be supplied to the stuffing box to lubricate the packing and to provide a liquid seal. This can be accomplished by piping water or a clear liquid from an external source, or by installing a by-pass from the ¼" pipe tap in the air separator to the lubricating port in the stuffing box.

If a single mechanical seal is used, provision must be made to constantly supply liquid at the seal faces. This can be accomplished by installing a by-pass line from the ¼" pipe tap in the air separator to the stuffing box.

For other information, stuffing box Mark II Standard Durcopump, Section I.

ROTATE SHAFT

Refer to Mark II Standard Durcopump, Section I.

OPERATION

START–UP

When starting the Durco Self-Priming pump for the first time, make certain that all suction and discharge valves are wide open and that the priming chamber is full of liquid. Insure that all flush or by-pass lines are open and connected properly, and that flush liquid is getting to the pump. Do not throttle discharge valves in an attempt to assist priming. All lines should be wide open for most effective priming.

The amount of time required by the pump to attain full prime is a function of the volume of air in the suction piping at start-up. Consult Bulletin P-12-100 for approximate priming time. If pump does not prime within a few minutes, the following points should be checked:

a. Check suction system for possible air leaks.
b. Recheck pump rotation.
c. Recheck lubrication or flush line.
d. Check liquid level in sump.
e. Insure that some foreign matter has not been drawn against or into the suction pipe.
f. Insure that discharge piping is open so that the air or gas from the suction can escape.

OPERATION OF SELF PRIMING PUMP WITHOUT PRIMING CHAMBER

Without the priming chamber the pump operates in the same manner as the conventional self-primer, except that it must have a flooded suction. This type of unit is useful where the liquid level in the supply tank momentarily drops below the suction inlet, or where occasional air binding may occur. When the supply liquid level builds up again, the pump will re-prime itself promptly, and resume normal pumping.

MAINTENANCE

Refer to page 5 of Section I. The entire pumping unit of the MARK II self-priming pump is identical to that of the standard pump. It is usually unnecessary to remove the priming chamber (#146), air separator (#150), or casing (#100) from their installed position. If, for any reason, it becomes necessary to remove the air separator or casing, it will be necessary to disconnect the external recirculation hose (#178) connecting these two parts. This is accomplished by loosening the hose clamps at the air separator end of the hose, then loosening the hose adapter at the same location. If the pump has a by-pass line (#179) from air separator to stuffing box, this is disconnected at the air separator in the same manner. The nuts and bolts (#154) retaining the air separator are then removed and the hose adapter can be threaded completely out of the air separator. DO NOT remove the hose adapter from the I.D. of the hose, as it is designed to grip the TFE lining firmly, and may damage the lining if pulled out quickly. Reconnection of this hose can be accomplished by reversing the above procedure. Be certain that the hose clamp is retightened firmly prior to restarting the pump.

Assembly is accomplished by merely reversing the disassembly procedure. Refer to assembly Mark II Standard Durcopump, Section I.

IN PLACE SEAL REPLACEMENT

In some large industrial plants, pump installations are far from the general maintenance shop and it is often convenient to maintain the pump in place. Durco MARK II pumps offer a unique type of rear footpiece that becomes a field workbench and allows minor maintenance such as visual inspection of the wet end parts or mechanical seal replacement at the pump location. This sequence is illustrated in Figure I. The pumping unit is backed out of the casing and swung around until it is at right angle to the original installation line. The bearing housing cap screw is then retightened to hold the power end unit firmly in place.

This same field maintenance and inspection procedure is accomplished on the Durco Group I pump without the special footpiece. After the bearing housing cap screw is removed, the pumping unit is backed out of the casing, swung around at right angle to the original installation line, and is secured by reinserting the cap screw through the bearing housing foot.

In Figure I, we show replacement of a hook-type sleeve with a rotary unit of a mechanical seal mounted on it. A measurement is taken from the end of the sleeve to the retainer portion of the mechanical seal. The new rotary unit merely goes back in the same position and is firmly affixed to the shaft sleeve, making certain that new set screws are used. A drop of clean light oil is applied to the new stationary seat and spread uniformly over the face with a clean tissue. The follower flange and stationary seat are then carefully reassembled on the shaft. Before reassembling the shaft sleeve, a heavy coating of molycoat or similar lubricant should be applied over the shaft and around the inside diameter of the sleeve to prevent galling and binding. A drop of oil is also applied to the rotating face and again spread uniformly with a clean tissue. The sleeve is then applied over the shaft and firmly pressed home. After the seal is replaced, the rear cover and impeller are reassembled, as described in Section I, and the pump is merely swung back into position. After the coupling spacer is reassembled, the pump is ready to run.

1. Remove spacer coupling as shown above.

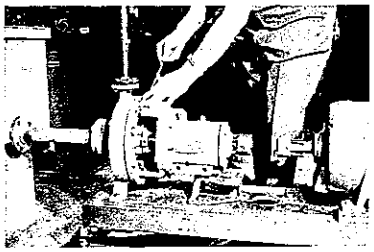

2. Remove casing nuts.

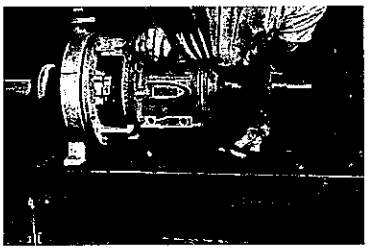

3. Loosen cap screw under bearing housing.

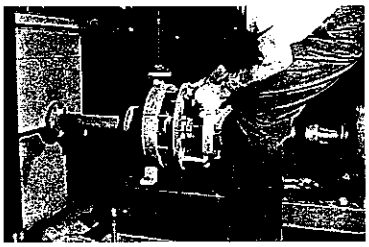

4. Slide bearing housing back.

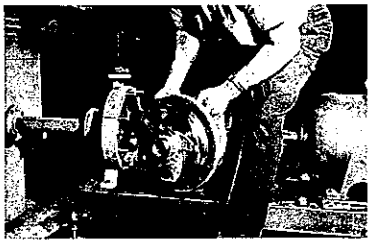

5. Slide housing to one side.

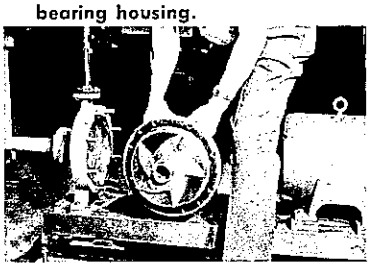

6. Turn housing 90°.

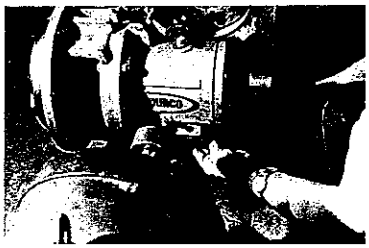

7. Retighten cap screw under bearing housing.

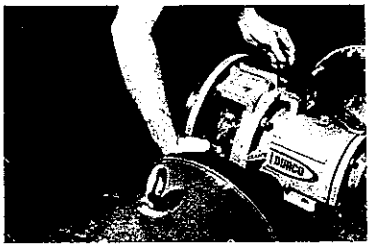

8. Remove seal gland bolts and slide gland back.

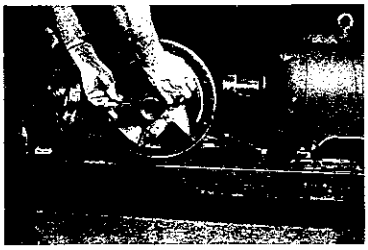

9. Remove impeller.

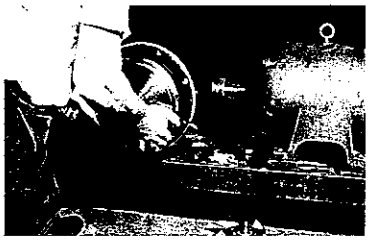

10. Remove rear cover plate.

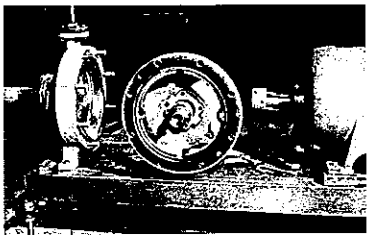

11. Sleeve now fully exposed.

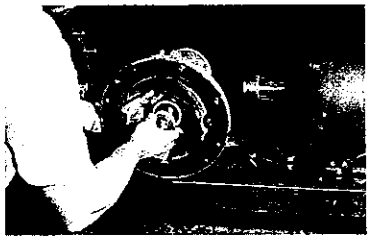

12. Remove old seal, replace with new or rebuilt one.*

*Illustration shows pump with replaceable sleeve. Same procedure can be used for pump with DC8 or Superchlor shaft.

FIG. I

GROUP I PUMPS (Standard & Self-Priming)

STD. COUPLING SPACER LENGTH IS 3½" (89)

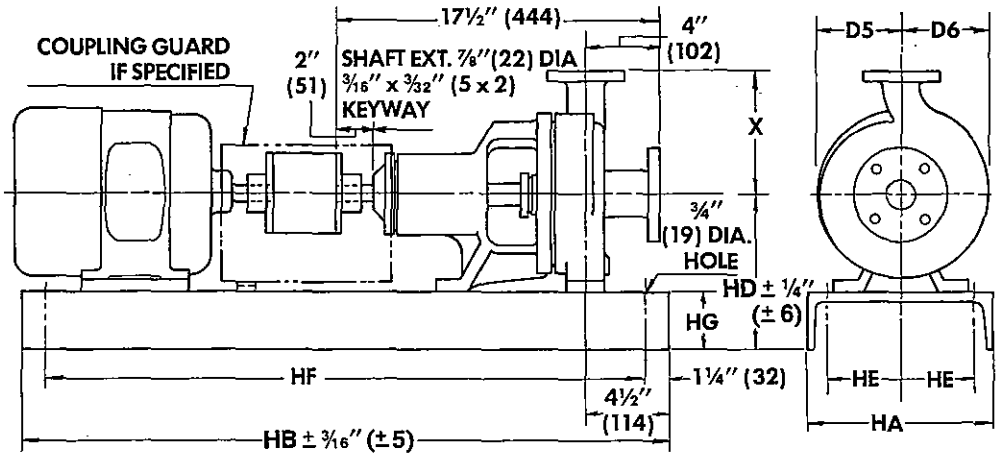

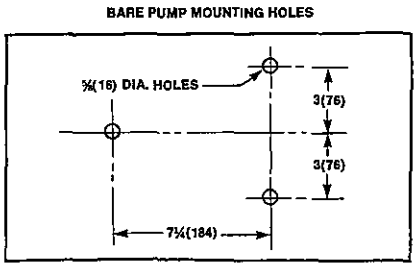

GROUP II PUMPS (Standard & Self-Priming)

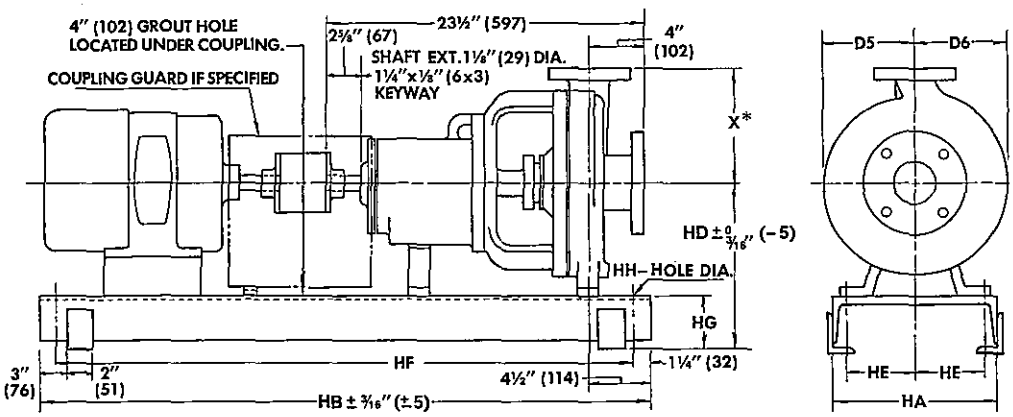

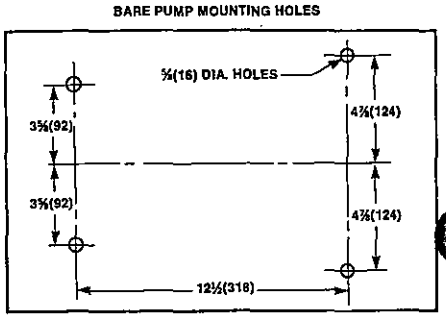

Baseplate	Wt. lbs (kg)	HA in (mm)	HB in (mm)	HE in (mm)	HF in (mm)	HG (MAX) in (mm)	HH in (mm)	Max. Motor Frame	HD ① in (mm)	HD ② in (mm)
52	115(51.8)	12(305)	45(1143)	4½(114)	42½(1080)	3¾(95)	¾(19)	215T 215	12(305)	13¾(349)
53	178(80.1)	15(381)	52(1321)	6(152)	49½(1257)	4⅛(105)	¾(19)	286T 286U	12⅜(314)	14⅛(359)
54	234(105.3)	18(457)	58(1473)	7½(190)	55½(1410)	4¾(121)	1(25)	326T 326U	13(330)	14¾(375)
								365T 365U	14(356)	
55	304(136.8)	18*(457)	60(1524)	7½(190)	57½(1460)	4¾(121)	1(25)	404T 404TS 404US	15(381)	15(381)
								404U 405TS 405US	15(381)	15(381)
								444TS 444US	16(406)	16(406)
56	320(144)	18(457)	61¾(1568)	7½(190)	59¼(1505)	4¾(121)	1(25)	405T 445TS 405U 445US	16(406)	16(406)

① For the following pumps: 3x2-7, 2x1-10, 3x1½-8, 3x1½-10, 3x2-8, 3x2-10, 4x3-8, 4x3-10, 2x1S-10, & 3x2S-10.

② For the following pumps: 3x1½-13, 3x2-13, 4x3-13, 4x3-10H, 6x4-13, 4x3S-10H, 3x2S-13, 4x3S-13, & 6x4S-13.

*The motor end of this pump is 22 in (559 mm) wide because extensions are welded to the top to allow mounting of large motors.

Dimensions

Baseplate	Wt. lbs (kg)	HA in (mm)	HB in (mm)	HE in (mm)	HF in (mm)	HG in (mm)	Motor Frame	HD in (mm)
50	73(32.8)	10(254)	35(889)	4(102)	32½(826)	3(76)	182T 184	8¼(210)
51	95(42.8)	12(305)	39(991)	4½(114)	36½(927)	3¼(83)	215T 215	8½(216)
53A	146(65.7)	15(381)	44(1118)	6(152)	41½(1054)	3½(89)	254T 256T	9⅞(251)
							284	10¾(273)

STD. COUPLING SPACER LENGTH IS 3½(89)

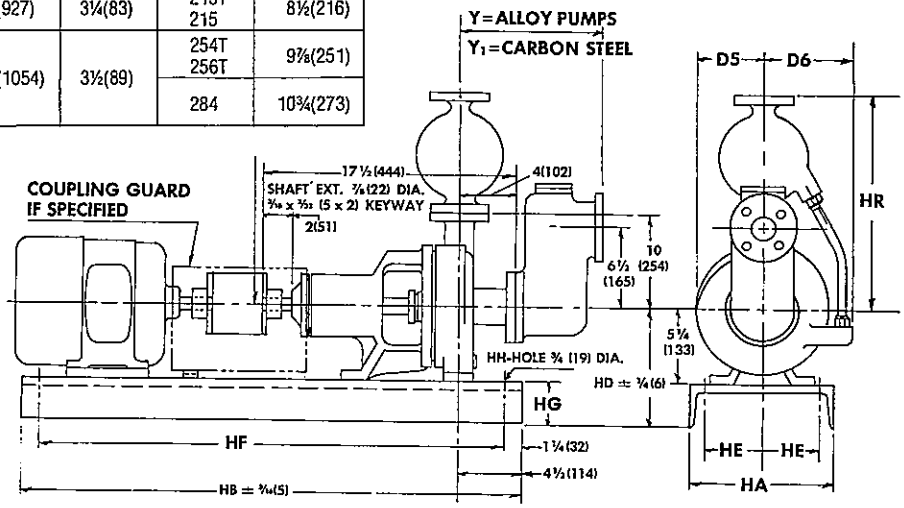

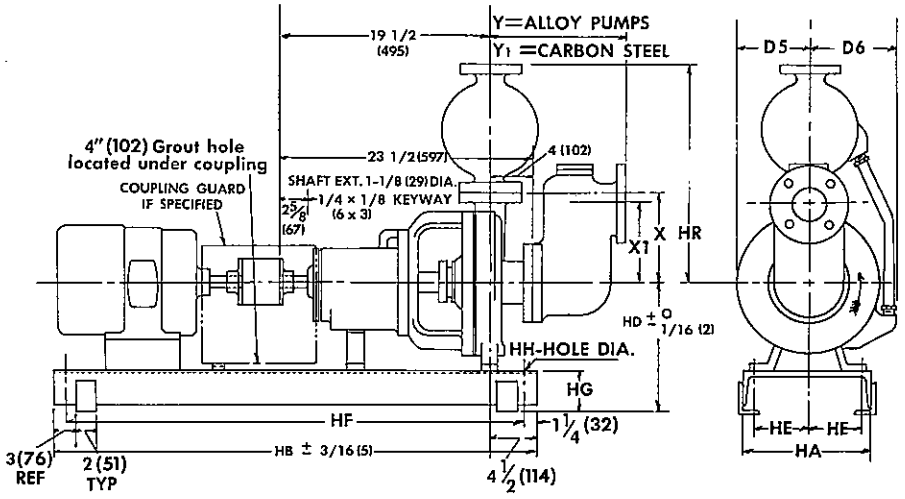

Group I and Group II Standard Pumps

Standard Pumps	Suction Size in (mm)	Discharge Size in (mm)	Weight lbs (kg)	X in (mm)
1½x1-6	1½(40)	1(25)	70(31.5)	6½(165)
1½x1-8	1½(40)	1(25)	81(36.4)	6½(165)
3x1½-6	3(80)	1½(40)	78(35.1)	6½(165)
3x2-7	2(50)	2(50)	188(84.6)	8¼(210)
2x1-10	3(80)	1(25)	210(94.5)	8½(216)
3x1½-8	3(80)	1½(40)	196(89.0)	8½(216)
3x1½-10	3(80)	1½(40)	200(90.0)	8½(216)
3x2-8	3(80)	2(50)	200(90.0)	9½(241)
3x2-10	3(80)	2(50)	206(92.7)	9½(241)
4x3-8	4(100)	3(80)	227(103.1)	11(279)
4x3-10	4(100)	3(80)	225(101.2)	11(279)
4x3-10H	4(100)	3(80)	249(112.0)	12½(318)
3x1½-13	3(80)	1½(40)	250(112.5)	10½(267)
3x2-13	3(80)	2(50)	258(116.1)	11½(292)
4x3-13	4(100)	3(80)	281(126.4)	12½(318)
6x4-13A	6(150)	4(100)	324(145.8)	13½(343)

Flange Drilling

Size	Class 150			Class 300		
	No.	Size in (mm)	B.C. in (mm)	No.	Size in (mm)	B.C. in (mm)
1(25)	4	⅝(16)	3⅛(79)	4	¾(19)	3½(89)
1½(40)	4	⅝(16)	3⅞(98)	4	⅞(22)	4½(114)
2(50)	4	¾(19)	4¾(121)	8	¾(19)	5(127)
3(80)	4	¾(19)	6(152)	8	⅞(22)	6⅝(168)
4(100)	8	¾(19)	7½(190)	8	⅞(22)	7⅞(200)
6(150)	8	⅞(22)	9½(241)	12	⅞(22)	10⅝(270)
8(200)	8	⅞(22)	11¾(298)	12	1(25)	13(330)
10(250)	12	1(25)	14¼(362)	16	1⅛(29)	15¼(387)

Group I and Group II Self-Priming Pumps

Self-Priming Pumps	Suction Size in (mm)	Discharge Size in (mm)	Bare Wt. lbs (kg)	X in (mm)	X_1 in (mm)	Y in (mm)	Y_1 in (mm)	HR in (mm)	D5 in (mm)	D6 in (mm)
1½x1S-6	1½ (40)	1 (25)	140 (64)	6½ (165)	10 (250)	12 (305)	14 (356)	18 1/16 (459)	4 5/16 (110)	6¾ (171)
2x1S-10	2 (50)	1 (25)	310 (141)	8½ (216)	11 (279)	13⅜ (346)	17 1/16 (433)	20 (508)	6¾ (171)	9 (229)
3x2S-10	3 (80)	2 (50)	339 (154)	9½ (241)	11 (279)	13⅜ (346)	17½ (444)	23 9/16 (598)	6¾ (171)	9¼ (235)
4x3S-10H	4 (100)	3 (80)	440 (200)	12½ (318)	13 (330)	14½ (368)	17½ (444)	28 9/16 (725)	6¾ (171)	10¾ (273)
3x2S-13	3 (80)	2 (50)	396 (180)	11½ (292)	11 (279)	13⅜ (346)	17½ (444)	25 9/16 (649)	8¼ (210)	11¼ (286)
4x3S-13	4 (100)	3 (80)	466 (212)	12½ (318)	13 (330)	14½ (368)	17½ (444)	28 9/16 (725)	8¼ (210)	12½ (318)
6x4S-13	6 (150)	4 (100)	682 (310)	13½ (343)	14 (356)	19¾ (502)	23 1/16 (586)	33 9/16 (852)	9 (229)	12½ (318)

GROUP III PUMPS (Standard only)

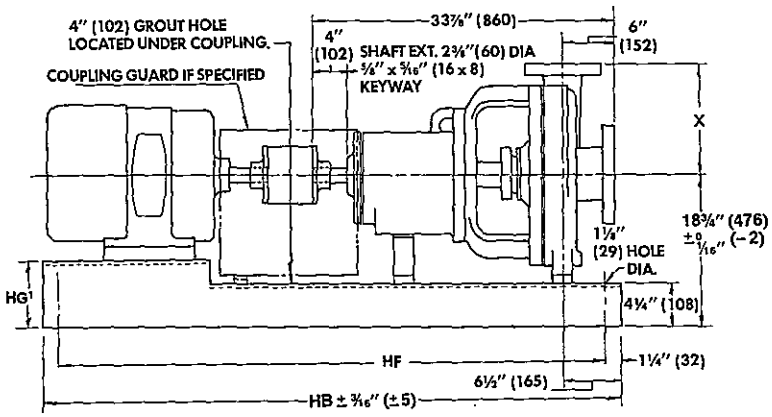

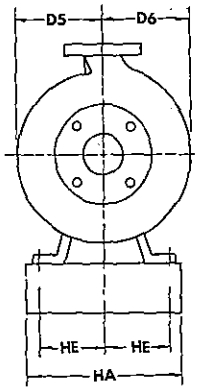

BARE PUMP MOUNTING HOLES

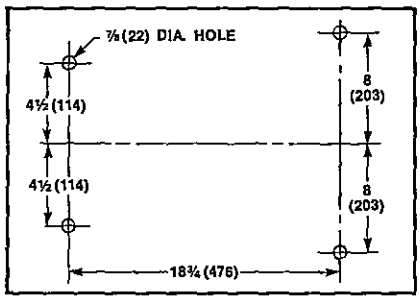

Baseplate	Wt lbs (kg)	HA in (mm)	HB in (mm)	HE in (mm)	HF in (mm)	HG MAX. in (mm)	HG_1 in (mm)	Motor Frame	HD in (mm)
58	390(175.5)	20(508)	68(1727)	8½(216)	65½(1664)	4¼(108)	9¾(248)	284TS TO 365U	18¾(476)
59	540(243.0)	22(559)	80(2032)	9½(241)	77½(1968)	4¼(108)	7¾(197)	404US TO 445T	18¾(476)
60	580(261)	25(635)	84(2134)	11(279)	81½(2070)	4¼(108)	6¼(159)	505 TO 8144	18¾(476)

Group III Standard Pumps

Standard Pumps	Suction Size in (mm)	Discharge Size in (mm)	Weight lbs (kg)	X in (mm)
8x6-14A	8(200)	6(150)	680(306.0)	16(406)
8x6-16	8(200)	6(150)	740(333.0)	18(457)
10x8-17	10(250)	8(200)	835(375.8)	20(508)

Group I

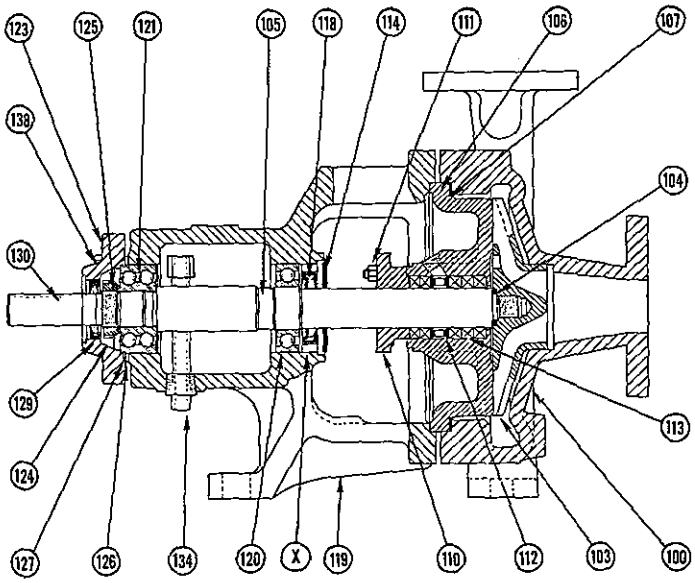

Group II

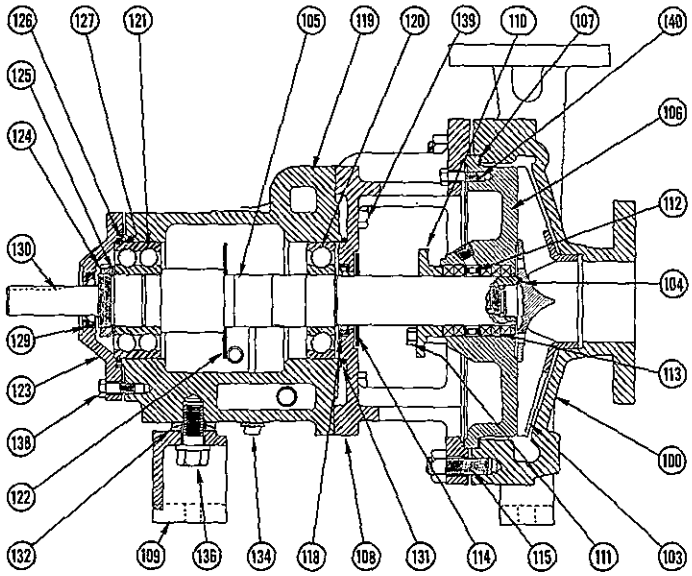

Castings	ASTM Specification
Ductile Iron	A395
Durcomet 100	A296 & A351, Grade CD-4M
Type 316 SS	A296, Grade CF-8M
Carbon Steel	A216, Grade WCB
Durimet 20	A296 & A351, Grade CN-7M
Monel	A296, Grade M-35
Nickel	A296, Grade CZ-100
Chlorimet 2	A494, Grade N-12M-2

Alternate Shaft Materials

Description	ASTM Specification
Type 304 SS	A276
Type 316 SS	A276
Hastelloy B	B335
Hastelloy C	B336
Monel	B164
Nickel	B160
Carpenter 20	B473
Ceramic	None
Superchlor	None

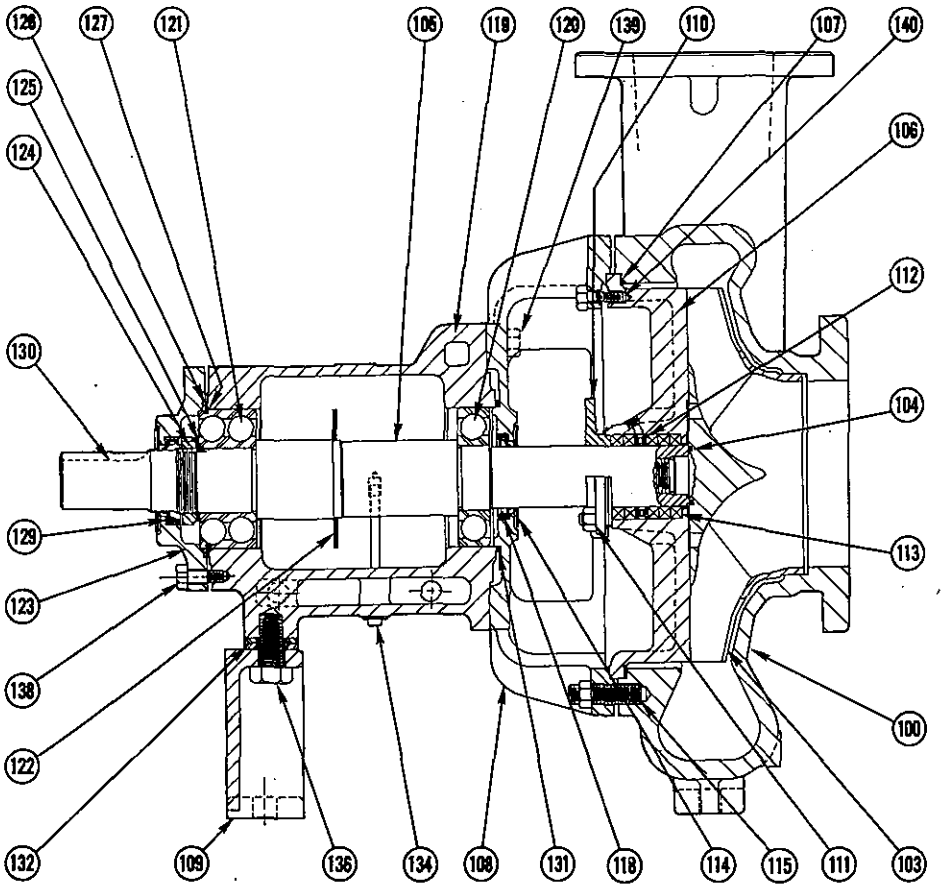

PARTS AND MATERIALS LIST

Item No.	Part	Ductile Iron	Durcomet 100	316 S.S.	Durimet 20	Monel	Nickel	Chlorimet 2	Chlorimet 3	Titanium
		Wet End Alloy								
100	Casing	Ductile Iron	Durcomet 100	316 S.S.	Durimet 20	Monel	Nickel	Chlorimet 2	Chlorimet 3	Titanium
103	Impeller	Durcomet 100	Durcomet 100	316 S.S.	Durimet 20	Monel	Nickel	Chlorimet 2	Chlorimet 3	Titanium
105	Shaft*	Steel[2]	DC8-Steel	DC8-Steel	DC8-Steel	DC8-Steel	DC8-Steel	DC8-Steel	DC8-Steel	Ti/304 S.S.
106	Rear Cover Plate	Ductile Iron[1]	Durcomet 100	316 S.S.	Durimet 20	Monel	Nickel	Chlorimet 2	Chlorimet 3	Titanium
110	Gland[3]	Durimet 20	Durimet 20	Durimet 20	Durimet 20	Durimet 20	Durimet 20	Durimet 20	Durimet 20	Titanium

Materials Common To All Alloys Unless Otherwise Noted

104	Impeller Gasket*	TFE & Silicone Rubber	124	Bearing Lock Nut	Steel
107	Rear Cover Plate Gasket*	Durabla	125	Bearing Lock Washer	Steel
108	Bearing Housing Adapter	Cast Iron	126	Bearing Cover Gasket	Cork
109	Bearing Housing Foot	Cast Iron	127	Bearing Shim*	Steel
111	Gland Studs/Hex Nuts	304SS/303SS[6]	129	O.B. Oil Seal*	TFE
112	Seal Cage[3]*	TFE	130	Shaft Coupling Key	Steel
113	Molded Ring Packing[3]*	TFE-Asbestos[5]	131	Bearing Housing Adapter "O" Ring	Neoprene or SBR
114	Inboard Deflector	TFE	132	Spherical Washer for Foot	Steel
115	Studs/Hex Nuts-Casing	304SS[4]	133	Trico Oiler (not shown)	Steel-Plastic
118	Inboard Oil Seal*	TFE	134	Bearing Housing Vented Drain Plug	Plastic
119	Bearing Housing	Cast Iron	136	Cap Screw for Foot	Steel
120	I.B. Bearing*	Steel	138	Capscrews for Bearing Cover	Steel
121	O.B. Bearing*	Steel	139	Machine Bolts for Bearing Housing	Steel
122	Oil Slinger	Steel	140	Capscrews for Adapter to Cover	Steel
123	Bearing Cover	Cast Iron			

*Parts normally stocked by customers for emergency repair.

[1]Jacketed Cover plates are carbon steel.

[2]Steel shaft is hardened to over 500 Brinnel under packing area to minimize wear. When mechanical seals are supplied it is necessary to use stainless steel or DC8 shaft.

[3]Used in packed pumps only.

[4]Part is Carbon Steel on Ductile Iron and Carbon Steel pumps.

[5]Ductile Iron and Carbon Steel pumps have plain asbestos.

[6]Part is Carbon Steel on Ductile Iron and Carbon Steel Group I and Group II pumps.

Group I

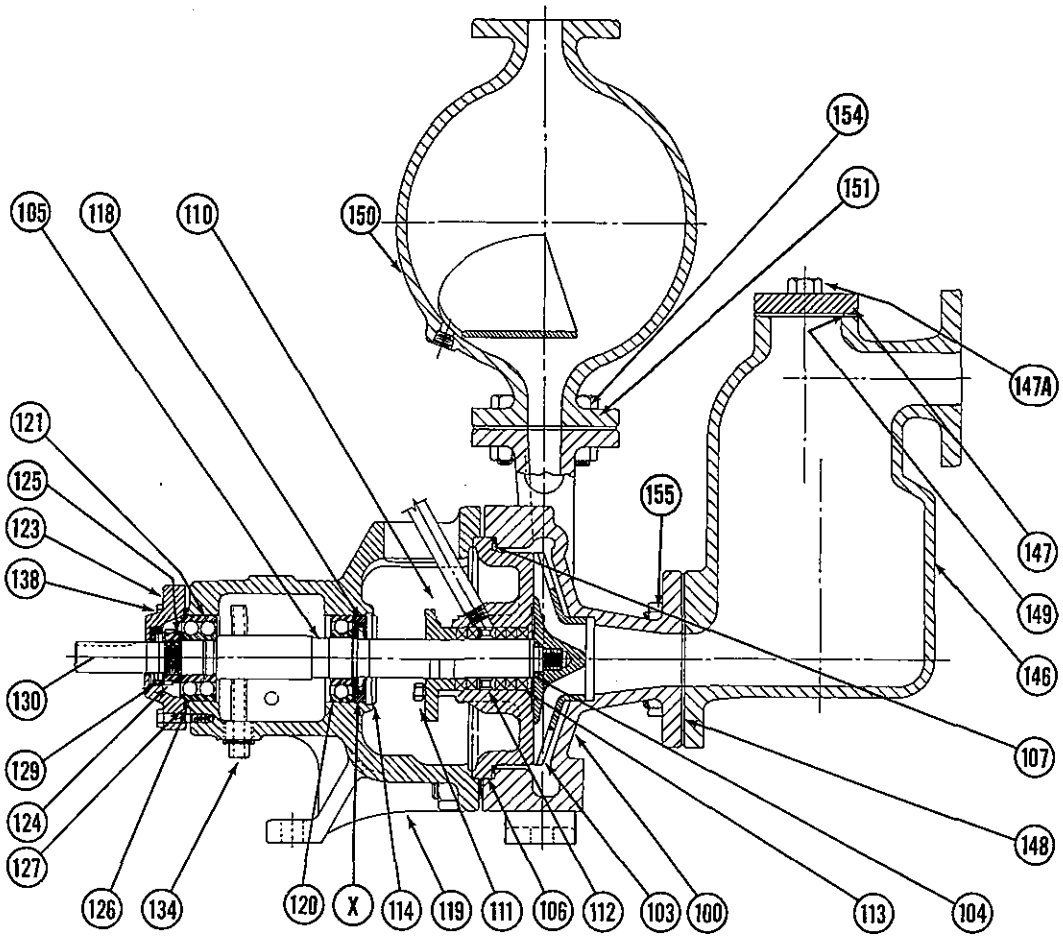

Group II

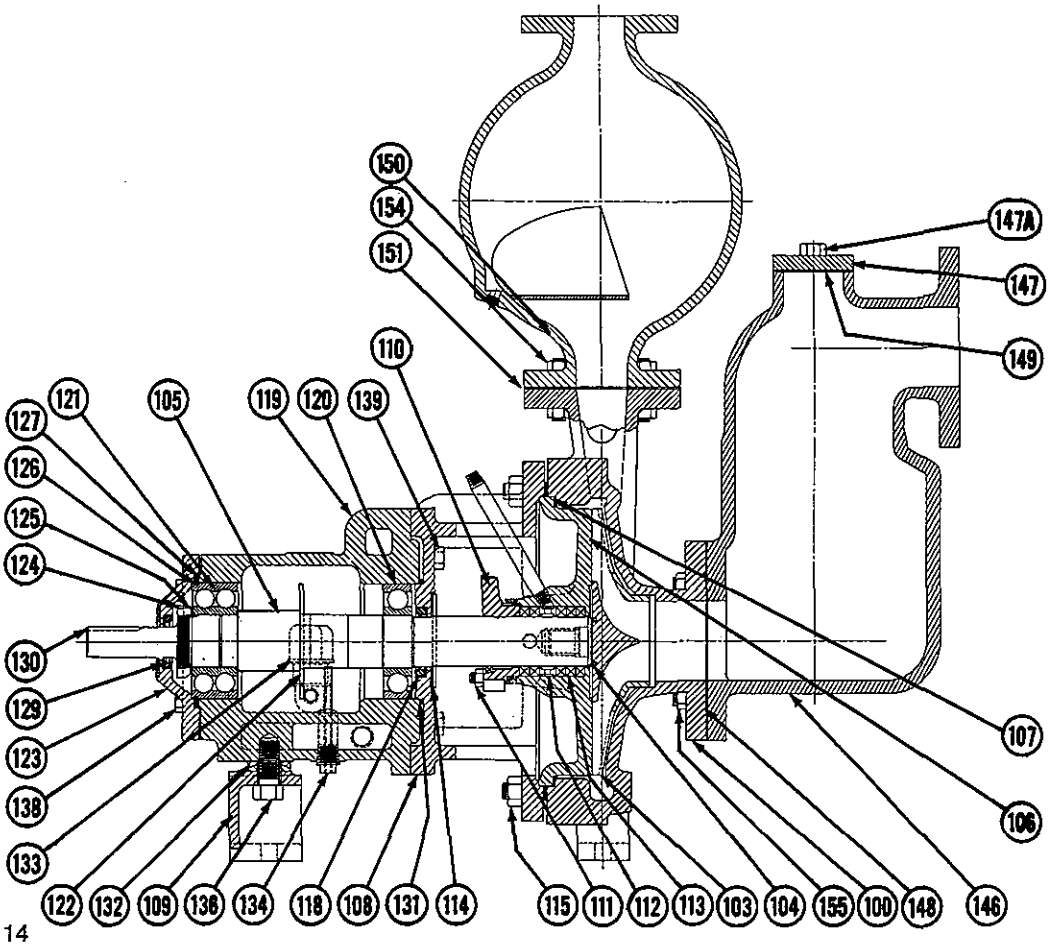

Castings	ASTM Specification
Ductile Iron	A395
Type 304 SS	A296, Grade CF-8
Type 316 SS	A296, Grade CF-8M
Carbon Steel	A216, Grade WCB
Durimet 20	A296 & A 351, Grade CN-7M
Monel	A296, Grade M-35
Nickel	A296, Grade CZ-100
Chlorimet 2	A494, Grade N-12M-2
Chlorimet 3	A494, Grade CW-12M-2

Alternate Shaft Materials	
Type 304 SS	A276
Type 316 SS	A276
Hastelloy B	B335
Hastelloy C	B336
Monel	B164
Nickel	B160
Carpenter 20	B473

Material List for Self-Priming Pumps

Item No.	Part	Steel or Ductile Iron	Durcomet 100	316 S.S.	Wet End Alloy Durimet 20	Monel	Nickel	Chlorimet 2	Chlorimet 3
100	Casing	Steel[7]	Durcomet 100	316 S.S.	Durimet 20	Monel	Nickel	Chlorimet 2	Chlorimet 3
103	Impeller	Durcomet 100	Durcomet 100	316 S.S.	Durimet 20	Monel	Nickel	Chlorimet 2	Chlorimet 3
105	Shaft*	Steel[2]	DC8-Steel	DC8-Steel	DC8-Steel	DC8-Steel	DC8-Steel	DC8-Steel	DC8-Steel
106	Rear Cover Plate	Ductile Iron[1]	Durcomet 100	316 S.S.	Durimet 20	Monel	Nickel	Chlorimet 2	Chlorimet 3
110	Gland[3]	Durimet 20	Durimet 20	Durimet 20	Durimet 20	Durimet 20	Durimet 20	Durimet 20	Durimet 20
146	Priming Chamber	Steel	Durcomet 100	316 S.S.	Durimet 20	Monel	Nickel	Chlorimet 2	Chlorimet 3
147	Priming Chamber Cover	Steel	Durcomet 100	316 S.S.	Durimet 20	Monel	Nickel	Chlorimet 2	Chlorimet 3
150	Air Separator	Steel	Durcomet 100	316 S.S.	Durimet 20	Monel	Nickel	Chlorimet 2	Chlorimet 3

Material Common to All Alloys unless Otherwise Noted

104	Impeller Gasket*	TFE & Silicone Rubber
107	Rear Cover Plate* Gasket	Durabla
108	Bearing Housing Adapter	Cast Iron
109	Bearing Housing Foot	Cast Iron
111	Gland Studs/Hex Nuts	304 SS/303 SS[6]
112	Seal Cage[3]*	TFE
113	Molded Ring[3]* Packing	TFE—Asbestos[5]
114	Inboard Deflector	TFE
115	Studs/Hex Nuts-Casing	304SS[4]
118	Inboard Oil Seal*	TFE
119	Bearing Housing	Cast Iron
120	I.B. Bearing*	Steel
121	O.B. Bearing*	Steel
122	Oil Slinger	Steel
123	Bearing Cover	Cast Iron
124	Bearing Lock Nut	Steel
125	Bearing Lock Washer	Steel
126	Bearing Cover Gasket*	Cork
127	Bearing Shim*	Steel
129	O.B. Oil Seal*	TFE
130	Shaft Coupling Key	Steel
131	Bearing Housing Adapter "O" Ring	Neoprene or SBR
132	Spherical Washer for Foot	Steel
133	Trico Oiler	Steel-Plastic
134	Bearing Housing Vented Drain Plug	Plastic
136	Cap Screw for Foot	Steel
138	Capscrews for Bearing Cover	Steel
139	Cap Screws for Bearing Housing	Steel
140	Capscrews for Adapter to Cover (not shown)	Steel
147A	Mach/Bolts (Cover to priming chamber)	Steel
149	Priming Cover Gasket	Durabla
148	Priming Chamber Gasket	Durabla
151	Air Separator Gasket	Durabla
154	Bolts (Casing to air separator)	Steel
155	Studs (Casing to priming chamber)	Steel
178	Recirculation Hose—Air Sep. to Casing	TFE-S.S.
179	By Pass Hose Air Sep. to Stuffing Box	TFE-S.S.

*Parts normally stocked for emergency repair.

1 Jacketed Cover plates are carbon steel.

2 Steel shaft is hardened to over 500 Brinnel under packing area to minimize wear. When mechanical seals are supplied it is necessary to use stainless steel or DC8 shaft, or stainless steel sleeve.

3 Used in packed pumps only.

4 Part is Cr—Mo steel on Ductile Iron and Carbon Steel pumps.

5 Ductile Iron and Carbon Steel pumps have plain asbestos.

6 Part is Carbon Steel on Ductile Iron and Carbon Steel Group I and Group II pumps.

7 Part is Ductile Iron on 2 X 1S —10 and 3 X 2S —10

Sales Offices

The Duriron Company, Inc.

Arizona	Telephone: (602) 886-8291
Tucson, Ariz. 85710	7840 E. Broadway
California	Telephone: (415) 524-5844
Berkeley, Calif. 94710	1621 Fifth St.
	Telephone: (213) 869-4408
Downey, Calif. 90242	8032 Imperial Highway
Colorado	Telephone: (303) 333-4226
Denver, Colo. 80206	222 Milwaukee St.
Delaware	Telephone: (302) 737-0475
Newark, Del. 19711	P. O. Box 208
Florida	Telephone: (813) 688-8501
Lakeland, Fla. 33803	2128 E. Edgewood Dr.
	Telephone: (904) 432-1511
Pensacola, Fla. 32590	P. O. Box 12156
Georgia	Telephone: (404) 458-9031
Atlanta, Ga. 30338	1770 Old Springhouse Ln.
Illinois	Telephone: (312) 287-7147
Westchester, Ill. 60153	1127 S. Mannheim Rd.
Louisiana	Telephone: (504) 927-5072
Baton Rouge, La. 70806	7315 Exchange Pl.
Massachusetts	Telephone: (617) 444-3899
Needham, Mass. 02192	60 Dedham Ave.
Michigan	Telephone: (313) 559-4303
Lathrup Village, Mich. 48076	27031 Southfield Rd.
Missouri	Telephone: (314) 567-1055
Maryland Heights, Mo. 63043	150 Weldon Parkway
New Jersey	Telephone: (201) 489-4200
S. Hackensack, N. J. 07606	34 Florence St.
New York	Telephone: (716) 875-5915
Buffalo, New York 14223	1965 Sheridan Dr.
North Carolina	Telephone: (704) 333-3141
Charlotte, N. C. 28204	1200 E. Morehead St.
Ohio	Telephone: (216) 921-6618
Beachwood, O. 44122	21515 Chagrin Blvd.
	Telephone: (513) 226-4382
Dayton, O. 45401	P.O. Box 1145
	Telephone: (513) 299-7289
Kettering, O. 45439	3490 S. Dixie Dr.
Oklahoma	Telephone: (918) 743-6251
Tulsa, Okla. 74105	5553 S. Peoria Ave.
Pennsylvania	Telephone: (215) 337-3250
King of Prussia, Pa. 19406	216 Goddard Blvd.
	Telephone: (412) 563-2400
Pittsburgh, Pa. 15228	300 Cedar Blvd.
Puerto Rico	Telephone: (809) 769-6687
Carolina, P. R. 00630	P. O. Box 2093
Tennessee	Telephone: (615) 588-7445
Knoxville, Tenn. 37919	8914 Kingston Pike
Texas	Telephone: (713) 498-2900
Houston, Tx. 77099	10710 Fallstone Rd.
	Telephone: (713) 727-2124
Nederland, Tx. 77627	3720 Nederland Ave.
Virginia	Telephone: (804) 288-6005
Richmond, Va. 23229	8001 Franklin Farms Dr.
Washington	Telephone: (206) 633-3132
Seattle, Wash. 98103	4000 Aurora Ave., N.

Duriron of Canada, Ltd.

Edmonton	10425 Princess Elizabeth Avenue Edmonton, Alberta TG5 OY5 Telephone: (403) 474-8021
Montreal	3860 Cote Vertu Road Montreal, Que. H4R 1V4 Telephone: (514) 336-0620
Sarnia	27031 Southfield Road Lathrup Village, MI. 48076 Telephone: (313) 559-4303
Toronto	43 Millwick Dr. Weston, Ont. M9L 1Y4 Telephone: (416) 749-1636
Vancouver	133 West 15th Street, Suite 104 Vancouver, B.C., V7M 1R8 Telephone: (604) 985-7131

S. A. Durco Europe, N. V.

Brussels	Rue Verte 216-226, Box 7 B1030 Brussels, Belgium Telephone: 2418987 Telex: 24095

Durco France S.A.R.L.

Grenoble	2, Rue Lavoisier F. 38320 Eybens Grenoble, France Telephone: 878593 Telex: 980882

Durco GmbH

Darmstadt	61 Darmstadt Pallaswiesen Strasse 109 W. Deutschland Telephone: 82828 Telex: 419278
Dusseldorf	Dusseldorf 1 Kavalleriestrasse 21 West Germany Telephone: 320360 Telex: 887739

Durco Process Equipment Ltd.

London	127A Broad St. Chesham, Bucks, England HP5 3EF Telephone: 74367 Telex: 837546
Milton Keynes	25 Blundells Road Bradville Milton Keynes MK13 7HA England Telephone: 31-4237

Duriron of Scandinavia A.B.

Stockholm	Granangsringen 28B 5 TR S-13500 Tyreso, Stockholm, Sweden Telephone: 7126500 Telex: 13536

Representatives

Australia	Chemical Construction & Equip. Co. Pty. Ltd. 36-38 John Street Mascot 2020, N.S.W., Australia Telex: 24074
Greece	Alexander G. Buhayar & Co. 54 Omirou Street Athens 135, Greece Telex: 219248
Iran	Case Technical Company Ltd. 366 Upper Roosevelt Avenue Tehran, Iran Telex: 212800
Israel	Techno Engineering Ltd. 5 Hagefen Street K. Bialick (Haifa), Israel Telex: 46834
Italy	Sciorelli S.A.S. Via Onorato Vigliana 38 10135 Torino, Italy Telex: 23203
Japan	Moritani & Co., Ltd. 4-22 Yaesu 1-Chome, Chuo-Ku Tokyo, 103-91 Japan Telex: 22854
Malaysia	George Kent Sdn. Berhad No. 2 Lorong 19-1A Petaling Jaya, Selangor, Malaysia Telex: 37577
New Zealand	Tasman Alloy Industries, Ltd. P.O. Box 19579 Woolston, Christchurch, New Zealand Telex: NZ4586
Portugal	C. Demoustier Caixa Postal 2242 Lisbon 2, Portugal Telex: 12590
South Africa	Edward L. Bateman, Ltd. Bartlett Road Boksburg North, South Africa Telex: 87880
Spain	Protisa S.A. General Martinez Gomez Campos 15 Madrid 10, Spain Telex: 23223
Switzerland	Ingenieurbureau Dr. Brehm Rudigerstrasse 10 CH-8027 Zurich, Switzerland Telex: 52094
Taiwan	Pioneer Enterprises Ltd. P.O. Box 59100 Taipei, Taiwan Telex: 11737
Turkey	Almut Kore Sehitleri Caddesi N° 50/B Zincirlikuyu Istanbul, Turkey Telex: 22602

Gorman Rupp 66-B2-6031C

MITCHELL LEWIS AND STAVER CO.
2502 E. Trent Avenue
Spokane, WA 99202

F A X T R A N S M I T T A L

DATE:	November 7, 1995	TIME:	10:40 AM
TO:	Don Plummer	PHONE:	1-509-258-4511
	Dawn Mining Co.	FAX:	1-509-[illegible]
FROM:	Claudia Holtz	PHONE:	1-509-534-0343
	Sales	FAX:	1-509-534-0360

RE: PO# 26056 – Parts for Gorman Rupp Model 66-B2-6031C

NUMBER OF PAGES INCLUDING COVER SHEET: 1

Message:

These are the parts you ordered:

P/N 7021	Impeller shaft	$ 996.60
P/N 926-G	Suction Head Gasket	6.42

Per Arlene at Gorman-Rupp in Mansfield, OH, fastest way, best way is UPS - Next Day Air, shipped here rather than to you. I will call you as soon as it comes in.

Claudia

A C D E

16C2-F256D

→ S/N 812379 U

PUMP ISSUE

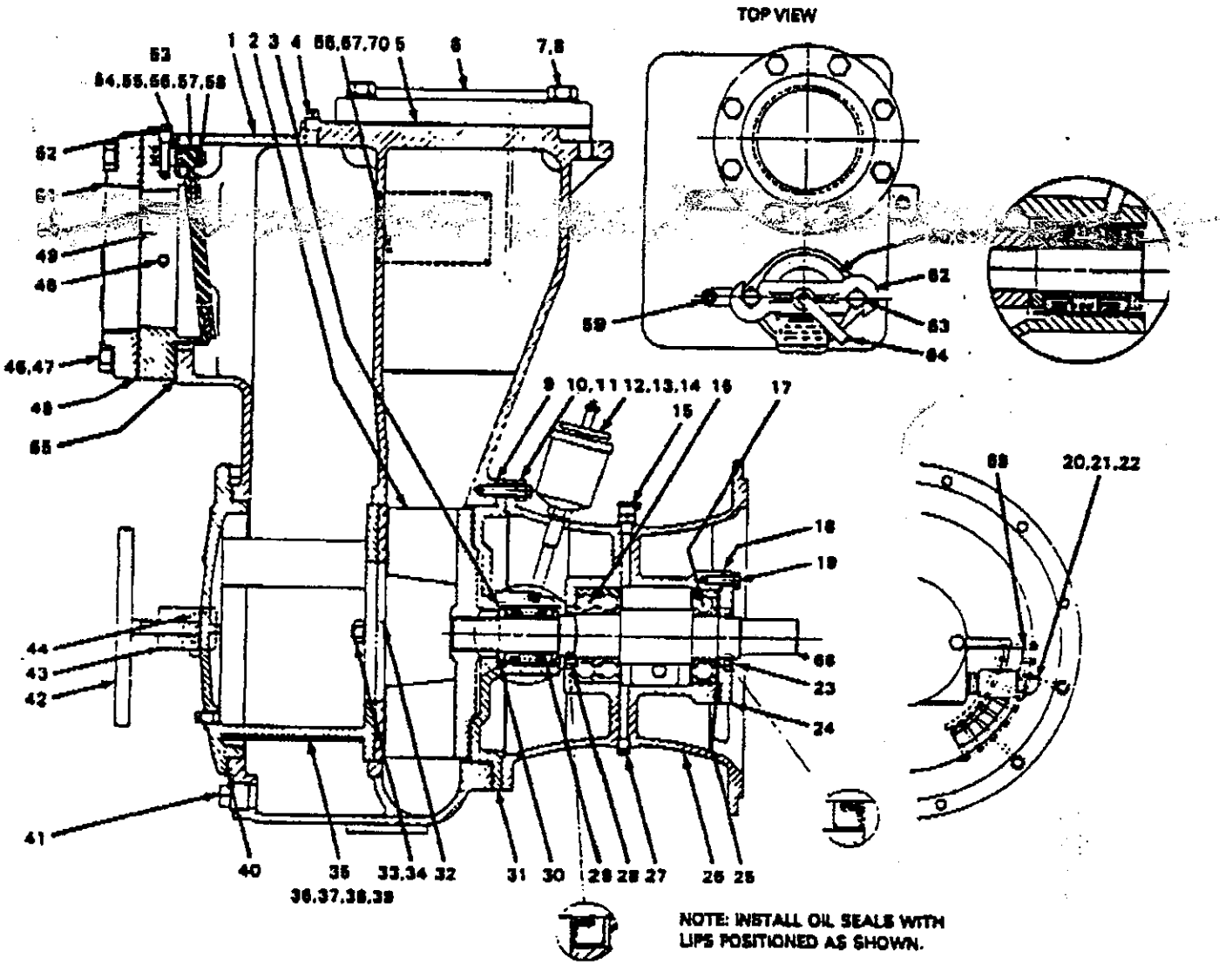

 Copyright by the Gorman-Rupp Company

16C2-F256D

S/N 812379 UP

PUMP ISSUE 4

ITEM NO.	PART NAME	PART NUMBER	MATL CODE	QTY
1	VOLUTE CASING	12583	10010	1
2	★IMPELLER	12584	11000	1
3	★SEAL ASSEMBLY	05-1500	–	1
4	PIPE PLUG	P-04	11990	1
5	★DISCHARGE FLANGE GASKET	1879-G	18000	1
6	DISCHARGE FLANGE	1733	[illegible]	1
7	HEX HEAD CAPSCREW	[illegible]	15991	[illegible]
8	LOCKWASHER	[illegible]	15991	[illegible]
9	★VOLUTE GASKET SET	34-G	18000	1
10	STUD	C-0809	15991	8
11	HEX NUT	D-08	15991	8
12	GREASE CUP	S-1500	–	1
13	PIPE COUPLING	AE-04	11990	1
14	HEAVY PIPE NIPPLE	THA-0412	15070	1
15	OIL HOLE COVER	29717-005	–	1
16	★BALL BEARING	S-1186*	–	1
17	★BALL BEARING	S-1077	–	1
18	★BEARING CAP GASKET	5413-G	18000	1
19	HEX HEAD CAPSCREW	S-0604	15991	4
20	OIL LEVEL SIGHT GAUGE	S-1471	–	1
21	CLOSE NIPPLE	T-12	15070	1
22	PIPE COUPLING	AE-12	11990	1
23	★OIL SEAL	25258-622	–	1
24	BEARING CAP	4185-A	10010	1
25	WAVY WASHER	23983-327	–	1
26	INTERMEDIATE	38283-614	–	1
27	INTERMEDIATE DRAIN PLUG	P-08	11990	1
28	★OIL SEAL	25258-622	–	1
29	★SEAL LINER	7408	14010	1
30	★IMPELLER SHIM SET	5091	17060	1
31	SEAL PLATE	11895-A	10010	1
32	★WEAR PLATE ASSEMBLY	2545	15990	1
33	HEX NUT	D-08	15991	3
34	LOCKWASHER	J-08	15991	2
35	BACK COVER ASSEMBLY	42111-835	–	1
36	★ COVER PLATE	12583	10010	1
37	WARNING PLATE	3913-EV	13990	1
38	DRIVE SCREW	BM04-03	15990	4
39	COVER DRAIN PLUG	P-04	11990	1
40	★BACK COVER GASKET	7658-G	20000	1
41	VOLUTE DRAIN PLUG	P-16	11990	1
42	BACK COVER SCREW	2536	24000	1
43	BACK COVER CLAMP	12588	11000	1
44	MACHINE BOLT	A-1010	15991	2
45	★SUCTION FLANGE GASKET	1879-G	18000	1
46	HEX HEAD CAPSCREW	S-1214	15991	8
47	LOCKWASHER	J-12	15991	8
48	PIPE PLUG	P-04	11990	1
49	CHECK VALVE SEAT	11402-C	10010	1
50	ROUND HEAD MACHINE SCREW	X-0506	14990	2
51	SUCTION FLANGE	1758	10010	1
52	★CHECK VALVE PIN	11945	17010	1
53	★CHECK VALVE ASSEMBLY	46411-064	–	1
54	ADAPTER	NOT AVAILABLE		
55	MOLDED FLAP VALVE	NOT AVAILABLE		
56	SPACER SLEEVE	NOT AVAILABLE		
57	BACKUP PLATE	NOT AVAILABLE		
58	HEX HEAD CAPSCREW	NOT AVAILABLE		
59	PIPE PLUG	P-04	11990	1
60	★COVER PLATE ASSEMBLY	42111-344	–	1
61	★ COVER PLATE GASKET	50-G	18210	1
62	CLAMP BAR	38111-004	–	1
63	MACHINE BOLT	A-1014	15991	2
64	CLAMP BAR SCREW	31912-009	–	1
65	★CHECK VALVE SEAT GASKET	11402-G	21030	1
66	NAME PLATE	2913-G	13990	1
67	DRIVE SCREW	BM04-02	[illegible]	[illegible]
68	[illegible]	[illegible]	–	[illegible]
69	INTERMEDIATE GUARD	[illegible]	[illegible]	[illegible]
70	WARNING DECAL	38618-006	–	1
NOT SHOWN:				
	INTERMEDIATE GUARD	42381-001	–	1
	GROUND CABLE ASSEMBLY	5795-AC	X4040	1
	WIRE ASSEMBLY	5795-DY	–	1
	CABLE ASSEMBLY	5925-AA	24040	1
	STRAINER	7523-A	24000	1
	FUEL OUT ASSEMBLY	10785	24030	1
	FUEL LINE 3/16" x 48"	11208-A	–	1
	HOISTING BAIL	13351-G	24000	1
	FUEL RETURN ASSEMBLY	14294	24030	1
	HEX HEAD CAPSCREW	S-0604	15991	10
	HEX HEAD CAPSCREW	S-1006	15991	10
	HEX HEAD CAPSCREW	S-1007	15991	2
	HEX HEAD CAPSCREW	S-1008	15991	2
	HEX NUT	D-06	15991	10
	HEX NUT	D-10	15991	14
	LOCKWASHER	J-06	15991	12
	LOCKWASHER	J-10	15991	14
	FLAT WASHER	K-10	15991	4
	REDUCING ELBOW	D-0402	11990	1
	REDUCING ELBOW	D-0604	11990	1
	PIPE ELBOW	R-16	11990	1
	HALF UNION	S-0468	–	1
	FITTING	S-0686	–	1
	GROMMET	S-0757	–	1
	GROMMET	S-0807	–	1
	HOSE CLAMP	S-0655	–	1
	PRESSURE GAUGE	S-1446	–	1
	HOSE END SWIVEL	S-1670	–	2
	HOSE CLAMP	S-1758	–	1
	PIPE NIPPLE	T-36	15070	1
	SERVICE TEE	US-04	11990	1
	BATTERY BOX ASSEMBLY	GRP40-04	–	1
	BATTERY BOX COVER	4896-X	24000	1
	CABLE ASSEMBLY	5795-CR	24040	1
	BATTERY TAG	5555-5	00000	1
	BATTERY BOX	10479	24000	1
	HEX HEAD CAPSCREW	S-0604	15991	1
	HEX HEAD CAPSCREW	S-0605	15991	1
	HEX HEAD CAPSCREW	S-0624	15991	2
	HEX NUT	D-06	15991	4
	LOCKWASHER	J-06	15991	4
	FLAT WASHER	K-06	15991	6
	BATTERY	S-0978	–	2
	ELBOW 90° STREET THREAD	25813-004	–	1
	MALE CONNECTOR	29533-402	–	1
	FORD 256D ENGINE	29719-061	–	1
	CPS DECAL	38811-026	–	1
	HOSE 1/4" x 30"	31411-044	–	1
	SKID BASE	41566-563	–	1
	FUEL HOSE ASSEMBLY	46341-747	–	1
	FUEL TANK & GUARD ASSEMBLY	46711-033	–	1
	FUEL TANK	46711-034	–	1

★INDICATES PARTS RECOMMENDED FOR STOCK

THE GORMAN-RUPP COMPANY • MANSFIELD, OHIO
GORMAN-RUPP OF CANADA LIMITED • ST. THOMAS, ONTARIO, CANADA
Printed in U.S.A.

REV. A Copyright by the Gorman-Rupp Company

Robbins & Myers Operations – Assembly Instructions and Parts List for “L4” Drive End

11 Moyno Pump

Robbins & Myers
Moyno Fluids Handling Products

OPERATION - ASSEMBLY INSTRUCTIONS AND PARTS LIST FOR

"L4" DRIVE END

(FRAME SIZES 1L4, 2L4, 3L4, 3M3, 6M3, 3P2, 6P2, 9P2)

GENERAL

The Robbins & Myers Moyno Pump is one of the most versatile pumps available. It has been proven in thousands of applications over the past 40 years. It is backed by the experience gained over the years, both in application and manufacturing know-how.

The Moyno progressing cavity pump is a single-screw rotary pump. The pumping action is created by the single helical rotor rolling eccentrically in the double threaded helix of the stator. In its revolution, the rotor forms in conjunction with the stator a series of sealed cavities 180 degrees apart. As the rotor turns the cavities progress from the suction to the discharge. As one cavity diminishes, the opposing cavity is increasing at exactly the same rate. Thus, the sum of the two discharges is a constant volume. The result is a pulsation-less positive displacement flow with no valves.

NAMEPLATE DATA

The Moyno Pump nameplate, located on the bearing housing, carries the serial number, frame size, and type designation. All are extremely important and must be used when ordering spare parts.

Record the nameplate data of your pump in the spaces provided in the heading of Page 132.

Moyno Pumps are identified by Frame and Type. Pump Frame is essentially an indication of size. It consists of a number, a letter, and a number (i.e. 2L4). The first number indicates the number of stages in the pumping elements. The letter indicates the model. The final number indicates the size of the rotor-stator pumping elements. A frame 2L4 pump, therefore, has two stages of size 4 pumping elements.

The "L" in the frame size indicates a standard relationship between the housing, bearings, and drive shaft and the size of the pumping elements. Many variations may be made by adapting smaller element sizes to a larger drive end size. This may be necessary due to the severity of a specific pumping application. In cases where the drive end (housing, bearings, and drive shaft) is one size larger than the element size normally used, the pump is referred to as an "M" frame pump (i.e. 3M3). If the drive end is two sizes larger than the element size, the pump is referred to as a "P" frame. Thus, a frame 3L4, 3M3, and 3P2 would all use a common drive end.

Type designation is a series of letters which identify the "Materials of Construction" in component groups of parts. The usual type designation will consist of three letters.

The first letter identifies the material of the suction housing casting or the body casting where the bearing housing is a part of the suction housing.

The second letter indicates the material used in the drive shaft, pins, connecting rod, rotor, and other minor metallic parts in contact with the material being pumped.

The third letter determines the material of the stator. It identifies only the stator material and not that of the tube in which the stator is placed.

A typical type designation such as CDQ would result in the following:

- C = Cast Iron Suction Housing
- D = Tool Steel Internals including drive shaft, pins, connecting rod, rotor, and other minor metallic parts in contact with the material being pumped
- Q = Buna N Synthetic Rubber Stator (70 durometer)

The following letters identify the actual materials that are used in standard construction:

B - EPDM	Q - Buna N (70 durometer)
C - Cast Iron	R - Natural Rubber (55 durometer)
D - Tool Steel	S - Stainless Steel, type #316
F - Viton	T - Teflon (glass impregnated)
G - Stainless Steel, type #416	W - Cast Steel*

*Available only on 1L14 body

A number of variations are possible which may affect the components of a standard pump. Any variation in a pump which indicates a non-standard condition will result in the letter "X" appearing either in the three letter type designation or as a suffix to it.

Example: Type designation CXQ - This could indicate an unusual component part in the internals group.

If the letter "X" appears in the type designation of your pump, contact your nearest Moyno representative or sales office for clarification. It is necessary that the serial number be referenced to properly identify the pump and its variation.

Do not order by Reference Number. Use Part Number on page 132.

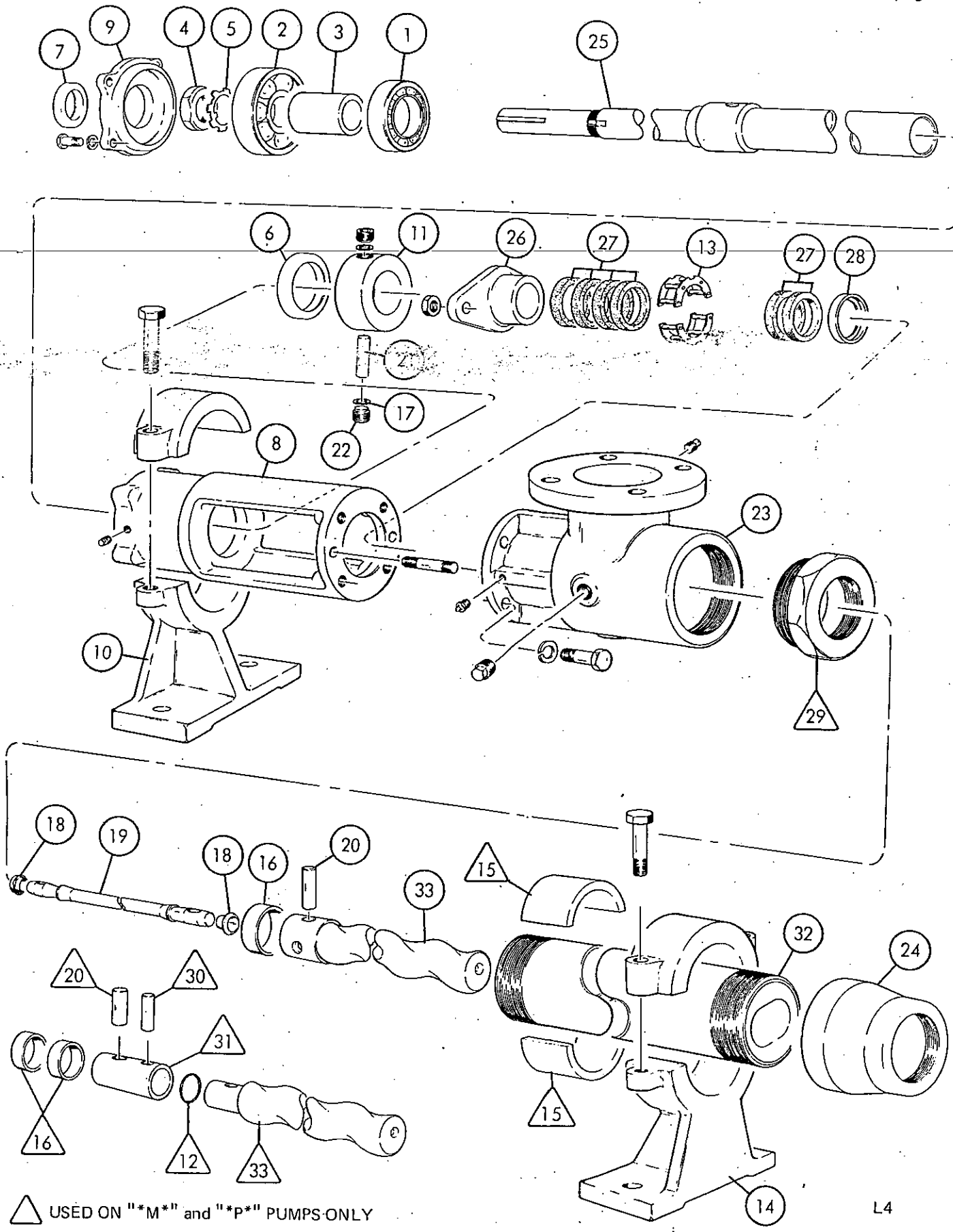

△ USED ON "*M*" and "*P*" PUMPS ONLY

L4

NAMEPLATE DATA

Frame Size_____

Type Designation_____

Serial Number_____

"L4" DRIVE END PARTS TYPE DESIGNATION

Select type column corresponding to type designation at left.
Order by part number Refer to frame size to select proper rotor and stator.

REF. NO.	DESCRIPTION	CDQ CDR CDB CDF Part #	CDD CDG CDT Part #	CSQ CSR CSB CSF Part #	CSG CSD CST Part #	SSQ SSR SSB SSF Part #	SSG SST Part #
1.	Ball Bearing (Radial)	A04291	A04291	A04291	A04291	A04291	A04291
2.	Ball Bearing (Thrust)	A04301	A04301	A04301	A04301	A04301	A04301
3.	Bearing Spacer	A04331	A04331	A04331	A04331	A04331	A04331
4.	Bearing Lock Nut	A04581	A04581	A04581	A04581	A04581	A04581
5.	Bearing Lock Washer	A04591	A04591	A04591	A04591	A04591	A04591
6.	Grease Seal (Radial)	A04611	A04611	A04611	A04611	A04611	A04611
7.	Grease Seal (Thrust)	A04621	A04621	A04621	A04621	A04621	A04621
	Bearing Kit**	K04291	K04291	K04291	K04291	K04291	K04291
8.	Bearing Housing	A04051	A04051	A04051	A04051	A04051	A04051
9.	Bearing Cover Plate	A04341	A04341	A04341	A04341	A04341	A04341
10.	Pump Support	A04371	A04371	A04371	A04371	A04371	A04371
11.	Shaft Collar	A04491	A04491	A04491	A04491	A04491	A04491
12.	O-Ring 9P2 Only	A04111	--	A04111	--	A04111	--
13.	Lantern Ring	A04571	A04571	A04571	A04571	A04571	A04571
14.	Stator Support 1L4, 2L4						
	3L4, 6M3	A04381	A04382	A04381	A04382	A04381	A04382
	3M3, 6P2, 3P2	A04381	A04381	A04381	A04381	A04381	A04381
	9P2	A04383	--	A04383	--	A04383	--
15.	Support Bushing 3M3	A04711	--	A04711	--	A04711	--
	3P2,6P2	A03711	A04711	A03711	A04711	A03711	A04711
16.	Pin Retainer	A04501	A04501	A04501	A04501	A04501	A04501
17.	Retaining Screw Washer	A04731	A04731	A04731	A04731	A04731	A04731
18.	Connecting Rod Washer	A04531	A04531	A04531	A04531	A04531	A04531
19.	Connecting Rod	B0425D	B0425D	B0225S	B0225S	B0225S	B0225S
20.	Rotor Pin	B0445D	B0445D	B0445S	B0445S	B0445S	B0445S
21.	Shaft Pin	B0446D	B0446D	B0446S	B0446S	B0446S	B0446S
22.	Drive Pin Retainer Screw	B0454D	B0454D	B0454S	B0454S	B0454S	B0454S
	Connecting Rod Kit***	K0425D	K0425D	K0425S	K0425S	K0425S	K0425S
23.	Suction Housing	B04021	B04022	B04021	B04022	B04026	B04027
	Reducer 1L4, 2L4, 3L4	B04091	B04092	B04091	B04092	B04096	B04097
	6M3	B03092	B04092	B03091	B04092	B03096	B04097
	3M3	B03091	B03092	B03091	B03092	B03096	B03097
	3P2, 6P2	B02091	B02092	B02092	B02092	B02096	B02097
	9P2	B03091	--	B03091	--	B03096	--
25.	Drive shaft +	B04261	B04261	B04266	B04266	B04266	B04266
26.	Packing Gland	B0441D	B0441D	B0441S	B0441S	B0441S	B0441S
27.	Packing +	B04421	B04421	B04425	B04425	B04425	B04425
28.	Packing Washer	B0465D	B0465D	B0465S	B0465S	B0465S	B0465S
29.	Adapter Bushing 3M3, 9P2	B03512	B04511	B03512	B04511	B04516	B03517
	3P2, 6P2	B04512	B03512	B04512	B03512	B04517	B03517
30.	Rotor Head Pin						
	3M3, 6P2, 9P2	B04471	B04471	B04472	B04472	B04472	B04472
	3P2	B04473	B04473	B04474	B04474	B04474	B04474
	9P2	B0445D	B0445D	B0445S	B0445S	B0445S	B0445S
31.	Rotor Head 3M3, 6P2	B04321	B04321	B04322	B04322	B04322	B04322
	3P2	B04323	B04323	B04324	B04324	B04324	B04324
	9P2	B04325	B04325	B04326	B04326	B04326	B04326
32.	Stator Frame 1L4	C4104*	C4104*	C4104*	C4104*	C5104*	C5104*
	Frame 2L4	C4204*	C4204*	C4204*	C4204*	C5204*	C5204*
	Frame 3L4	C4304*	C4304*	C4304*	C4304*	C5304*	C5304*
	Frame 3M3	C4303*	C4303*	C4303*	C4303*	C5303*	C5303*
	Frame 6M3	C4603*	C4603*	C4603*	C4603*	C5603*	C5603*
	Frame 3P2	C4303*	C4303*	C4302*	C4302*	C5302*	C5302*
	Frame 6P2	C4602*	C4602*	C4602*	C4602*	C5602*	C5602*
	Frame 9P2	C4902*	--	C4902*	--	C5902*	--
33.	Rotor Frame 1L4 +	C71041	C71041	C81041	C81041	C81041	C81041
	Frame 2L4 +	C72041	C72041	C82041	C82041	C82041	C82041
	Frame 3L4 +	C73041	C73041	C83041	C83041	C83041	C83041
	Frame 3M3 +	C73031	C73031	C83031	C83031	C83031	C83031
	Frame 6M3 +	C76031	C76031	C86031	C86031	C86031	C86031
	Frame 3P2 +	C73021	C73021	C83021	C83021	C83021	C83021
	Frame 6P2 +	C76021	C76021	C86021	C96021	C86021	C86021
	Frame 9P2 +	C79021	--	C89021	--	C89021	--

***Add third letter of type designation to complete Part No.**
EX: Type CDQ pump Add Q to basic number of stator

**Bearing Kit includes Items 1 thru 7.

***Connecting Rod Kit includes Items 17 thru 22 + See pgs. 134-135 for variations

INSTRUCTIONS FOR DISASSEMBLY AND ASSEMBLY
Frames 1L4, 2L4, 3L4, 3M3, 6M3, 3P2, 6P2, 9P2

Disassembly Procedure

1. Disconnect the power source.
2. Close the suction and discharge valves to isolate the pump from the line.
3. Turn off flush water to packing or rotary seal if used.
4. Remove drain plug in suction housing to drain away any fluid remaining in pump.
5. Place a support block under suction housing in area of drain plug. Wooden blocks are sufficient. The purpose is to prevent undue stress on pump support when pump is disassembled.
6. Disconnect piping from stator end of pump.
7. **Stator Removal** - With pipe wrench or strap wrench remove discharge reducer (24). Remove cap of stator support and with strap wrench or pipe wrench, unscrew the stator (32) from the suction housing. Pull stator off the rotor.
8. **Rotor Removal** - The rotor (33) is removed with the connecting rod (19) and rotor pin (20) as a unit. Removal of the unit is accomplished by removing the two drive pin retaining screws (22) located in the shaft collar (11). This step reveals the shaft drive pin (21) which is removed by driving the pin from the drive shaft (25) with a small punch or drift pin. Slide the shaft collar toward the packing gland (26) and remove the retaining screw washers (17) from each side of the drive shaft. The rotor and connecting rod can now be removed by pulling them from the pump.
   To disassemble, clamp the connecting rod (19) by its mid-section in a vise and with a drift pin, drive the pin retainer (16) from the head of the rotor. The rotor pin (20) can now be removed from the rotor freeing the connecting rod. Remove the connecting rod washers (18) if present.
   On most "M" and "P" frame pumps a detachable rotor head (31) is present. On these pumps a second pin retainer (16) is present to retain the rotor head pin (30). An "O" ring (12) is present only on frame 9P2 pumps.
9. To remove packing (27), remove nuts holding packing gland (26). Slip packing gland from studs, remove packing rings, lantern ring (13), and remaining packing rings. Packing rings can be removed with a standard packing puller. Note: If step 10 is to be performed, it should precede step 9 as packing can then be removed by freeing packing gland and driving packing, lantern ring, and packing washer (28) from housing using a small rod. Rod should enter where stator screws into suction housing. Place rod on packing washer and tap. Entire set should easily exit from opposite end of stuffing box.
10. **Drive Shaft & Bearing Removal** - With rotor removed it is now possible to remove the drive shaft and bearings as a sub-assembly. Remove the four cap screws holding the bearing cover plate (9) and slip from shaft. Insert a bar or rod into the hollow end of drive shaft (25) where it enters the suction cavity. By tapping on the rod the entire assembly will be forced from the bearing housing.
    To disassemble, remove bearing lock nut (4) and bearing lock washer (5). Using an arbor press remove radial bearing (1), bearing spacer (3), and thrust bearing (2). Apply pressure to inner race only.
    When replacing drive shaft and/or bearings, it is recommended that both grease seals be replaced. Grease seals are pressed into the bearing housing and bearing cover plate.

Assembly Procedure

Moyno pumps are reassembled in the reverse order of disassembly with special notes as outlined below:

1. Always replace all old washers, "O" rings, and packing. We also recommend replacing grease seals when new bearings are installed.
2. **Bearing Shaft Assembly** - When installing new bearings, make sure that they are seated against the shoulder on the shaft. Replace bearing lock washer and bearing lock nut. Tighten bearing lock nut securely. Bend tab down onto lock nut to prevent loosening of nut.
   Make sure that the shaft collar, packing gland, and packing washer are installed on the drive shaft as the hollow end emerges in the bearing housing and approaches the stuffing box area.
   When replacing the bearing cover plate, tighten all cap screws evenly to prevent damage to the bearing cover plate and thrust grease seal.
   Do not over-lubricate bearings. (See Maintenance)
3. When installing the connecting rod, make sure that the hole in the rod is aligned with the holes in the drive shaft and shaft collar **before** inserting the pin. Always use retaining screw washers and make sure that the hollowed end of the retaining screw fits over the end of the shaft pin to ensure a tight fit. Retaining screws must seat on retaining screw washers and **not** on pin.
4. When replacing packing, insert two rings on the shaft, the lantern ring, and then four more rings. This will allow the lantern ring to line up with the grease fitting on the stuffing box. **Make sure you stagger the ends of the packing rings.**
   When installing the new packing, you may find that all but one ring will go on the drive shaft. When the pump has run for a short time and the new packing is compressed, this final ring can be installed.
5. When installing the stator on the rotor, it is best to lubricate the rotor with water (or a lubricant compatible with the rubber in the stator) to allow the stator to slip on easier. (Grease or oil is not compatible with type "R" or "B" stators.)
   When replacing the stator, always tighten it with the pipe wrench on the end of the stator nearest the suction housing. This will prevent it from binding and damaging the threads.
   If your stator has a stainless steel sleeve, use a teflon tape or similar material on the threads before replacing -- on all stators with a carbon steel sleeve, use pipe dope.

6. **Caution: Dry operation is harmful to the pump. Always fill the pump with fluid to be handled prior to start up. Check any valves in discharge line to determine that no restrictions exist.**

MAINTENANCE

The Moyno pump has been designed for a minimum of maintenance, the extent of which is routine lubrication and adjustment of packing and infrequent lubrication of the bearings. The pump is one of the easiest to work on in that the main elements are very accessible and require few tools to disassemble.

Packing

The Moyno pump is normally furnished with die formed packing. The packing may be either grease lubricated through a grease fitting in the stuffing box or have plumbing connected to the housing to allow a water flush. (See Water Flush of Packing)

Packing gland adjusting nuts should be evenly adjusted so they are little more than finger tight. Over-tightening of the packing gland may result in premature packing failure and possible damage to the shaft and gland. When the packing is new, frequent minor adjustments are recommended for the first few hours of operation in order to compress and seat the packing. Greasing the packing often but with limited quantities of grease is the best practice. This can be done through a grease fitting which leads to a lantern ring in the mid-section of the packing. Do not use a one-piece spiral wrap of packing.

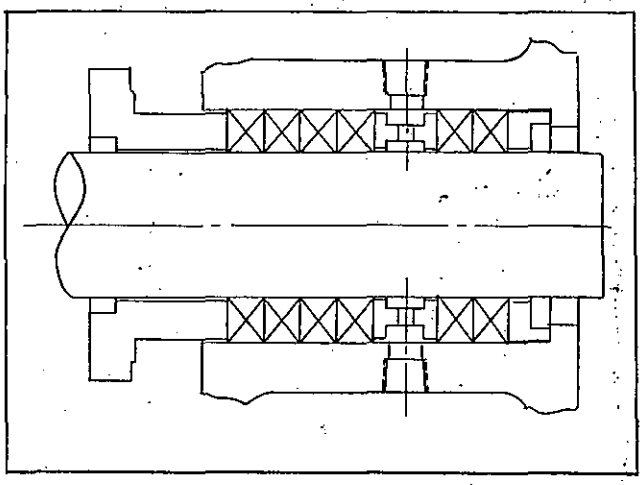

Cross section of stuffing box

Water Flush of Packing

When the material being pumped is abrasive in nature, it may be advantageous to flush the packing to prevent leakage under packing and excessive shaft wear.

Clean water can be injected through a 1/8" NPT tapped hole that normally houses the grease fitting for lubricating the packing. The water can be permitted to leak axially along the shaft in either direction or can be removed from the second tapped hole in the stuffing box. In both cases, the discharge from the stuffing box should be throttled slightly to maintain 10-15 PSI higher pressure in the stuffing box than is present in the suction housing.

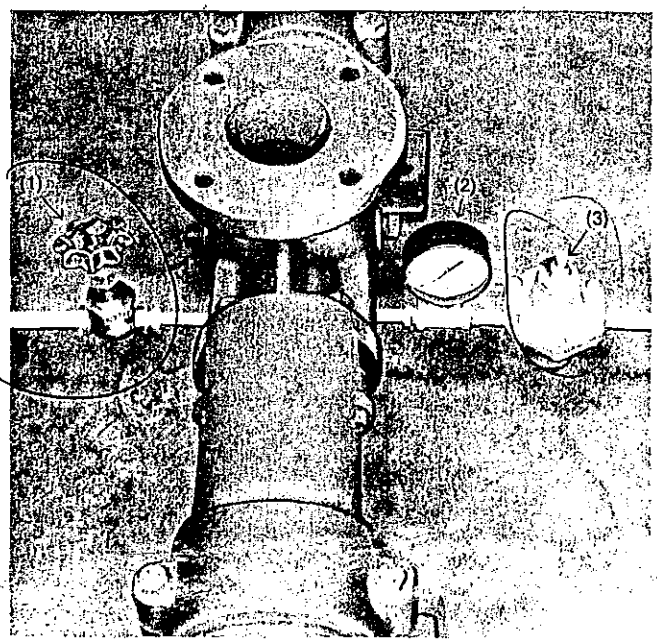

Typical water Flush to packing

This is a basic arrangement, other variations can be used. (1) Throttling Valve (2) Pressure Guage (3) Pressure Regulating Valve

Bearings

The Moyno pump is equipped with ball bearings in the drive end size L2 through L10. The bearings are lubricated at the factory and do not need additional lubrication for at least 1500 hours of normal operation.

When relubricating the bearings, the bearing-shaft assembly should be removed (See Disassembly instructions) and cleaned of old grease. Add only enough grease to fill the area between the bearings 1/3 full. Add a few drops of oil to bearing seals before reassembling. It is normal for bearings to run warm to the touch for the first few hours of operation.

Any type of Ep Lithium soap base grease is satisfactory for bearing lubrication. The use of Sodium or Calcium base grease is not recommended.

The following is a partial listing of approved bearing lubricants:

Dow Corning	DC 33
Keystone Lubricating Co.	Keystone #89
Texaco	Regal AFB2
Shell Oil Co.	Cyprina #3
Humble Oil & Refining Co.	Beacon 325
American Oil Co.	Supermil Grease #A72832
Mobil	EP1
Shell Oil Co.	Alvania #2

VARIATIONS OF STANDARD PARTS

ROTORS identified on parts listing are standard size with hard-chrome plated surface. Other variations of rotor size and finish may be ordered by selecting the standard rotor part number and changing the last digit of the rotor number as follows:

2 = Standard size, non-plated
3 = Undersize, chrome-plated
4 = Undersize, non-plated
5 = Oversize, chrome-plated

Do not change rotor sizes without consulting your local Moyno Sales Office. These variations are used for certain specialized pumping conditions only.

PACKING VARIATIONS listed are common to most type designations. Others may be specified by changing the last digit to the following:

1 = Standard on all type CDQ pumps
3 = Standard on all type CDR & SSR pumps
5 = Standard on all type SSQ pumps
7 = Optional--Solid Braided Teflon
8 = Optional--Teflon impregnated white asbestos

DRIVE SHAFTS shown have hard-chrome plating on the packing wear area. If non-plated drive shafts are required, select the standard part number and change the last digit to next higher number. Example: B04261 to B04262.

L4 STANDARD HARDWARE

ITEM	SIZE	# REQ.
Lock Washer		4
Packing Gland Stud	2 1/2L X 3/8D-16	2
Packing Gland Bolt Nut	2 1/2L X 3/8D-16	2
Nut	1 1/2L X 3/8D-16	2
Stator & Pump Support Screws	1 3/4L X 3/8D-16	4
Suction Housing Drain Plug	1/2NPT	3
Pipe Plug	1/8NPT	2
Grease Fitting	1/8NPT	1
Hex Key	5/16	1

RECOMMENDED SPARE PARTS

The Moyno pump has been designed and built with all wearable parts replaceable. A recommended inventory of spare parts is dependent upon the application and importance of continued operation.

For the shortest possible down time, we recommend the following parts be stocked:

1 - Rotor
1 - Stator
1 - Connecting Rod Kit

LIMITED WARRANTY

Robbins & Myers, Inc. will repair or replace, at its option, defects in material or workmanship developing within one year from factory shipment providing written notice of such defects is received and substantiated by the Company.

Correction of such defects by repair or replacement, FOB factory, shall constitute fulfillment of the guarantee. The return of all parts submitted under this guarantee must be authorized by the Company and transportation prepaid by the shipper. The Company has no liability for any repairs made outside the Company's factory, unless with prior written consent.

The guarantee will not be applicable unless the apparatus has been properly cared for and operated under normal conditions nor will the Company be responsible for damage resulting from improper storage or handling prior to placing the apparatus in service.

The guarantee of the Company on purchased items, assemblies or accessories which are installed as a separable unit shall not extend beyond the guarantee made by the manufacturer of the component.

Except for the express warranty above set forth, the Company makes no warranty, express or implied, and makes no warranty of fitness for a particular use.

Robbins & Myers
Moyno Fluids Handling Products

Springfield, Ohio 45501

2M/MP/8-77

Blancett Fluid Flow Meters BL-5100 Loop Powered 4-20 MA Transmitter

INSTALLATION & OPERATION MANUAL

Blancett
Fluid Flow Meters

DIVISION OF RACINE FEDERATED INC. ◦ P.O. BOX 972 ◦ ALTUS, OK 73521 U.S.A.
HIGHWAY 283 NORTH ◦ ALTUS, OK 73521 ◦ 1-800-235-1638 ◦ (405) 482-0036 ◦ (405) 482-9237

BL-5100 LOOP POWERED
4-20 MA. TRANSMITTER
OPERATION MANUAL
REV. A

LOOP POWERED 4 - 20 MA. TRANSMITTER

INPUT VOLTAGE:	+12.0 TO + 30.0 O.V.D.C.
SIGNAL INPUT:	FREQUENCY 0 - 2 KHZ AMPLITUDE 50 MV MINIMUM 50 VOLTS MAXIMUM
ANALOG OUTPUT:	* 4 MA. @ OHZ, 20 MA. @ DESIRED FULL SCALE FREQUENCY * FULL SCALE RANGE - OHZ - 2 KHZ * RESPONSE TIME - 95% OF CHANGE IN ONE SECOND * LINEARITY - .3% F/S * TEMPCO - < 2% OF READING OVER ENTIRE TEMPERATURE
TEMPERATURE:	OPERATING -40° TO +185° F STORAGE -65° TO +257° F
FEATURES:	MOUNTS DIRECTLY ON FLOW METER
ENCLOSURE:	FM APPROVED, C.S.I. CERTIFIED CLASS I GROUPS B,C,D CLASS II GROUPS E,F,G WEIGHT 1.7 LBS

THE BL-5100 IS A METER MOUNTED 2 WIRE LOOP POWERED ANALOG TRANSMITTER DESIGNED TO LINEARLY CONVERT A FREQUENCY INPUT TO AN EQUIVALENT 4-20 MA. CURRENT OUTPUT. WHEN INCORPORATED WITH A TURBINE FLOW METER A CURRENT REPRESENTATION PROPORTIONAL TO FLOW IS OBTAINABLE. DATA TRANSMISSION IS A CURRENT FORMAT EXHIBITS EXCELLENT NOISE IMMUNITY AND THE CAPABILITY OF LONG DISTANCE TRANSMISSION.

BENCH CALIBRATION PROCEDURE:

REQUIRED EQUIPMENT - POWER SUPPLY 12 V.D.C., DIGITAL MULTI-METER, FREQUENCY GENERATOR, FREQUENCY COUNTER AND SCREW DRIVER - .100" FLAT TIP

REFERENCE FIGURE I
TEST PROCEDURE:

1. CONNECT DIGITAL MULTI-METER POSITIVE LEAD TO POWER SUPPLY POSITIVE AND THE DIGITAL MULTI-METER NEGATIVE LEAD TO T13, SET DIGITAL FUNCTION TO MA. D.C.

2. CONNECT POWER SUPPLY NEGATIVE LEAD TO T1-4

3. CONNECT FREQUENCY GENERATOR POSITIVE AND NEGATIVE LEAD T1,2 RESPECTIVELY. ADJUST SIGNAL AMPLITUDE OF FREQUENCY GENERATOR TO 50 MV AND FREQUENCY TO MAXIMUM DESIRED POINT (FULL SCALE FREQUENCY)

4. TURN POWER SUPPLY & FREQUENCY GENERATOR "ON", ADJUST COARSE SPAN POT FOR 20.00 ON DIGITAL MULTI-METER INDICATION

5. ADJUST GENERATOR AMPLITUDE TO ZERO.

6. ADJUST ZERO POT FOR 4.00 MA ON DIGITAL MULTI-METER INDICATION

7. ADJUST GENERATOR AMPLITUDE TO 50 MV

8. ADJUST FINE SPAN POT FOR 20.00 MA. ON DIGITAL MULTI-METER INDICATION

9. REPEAT STEPS 5 THRU 8 TILL NO ADJUSTMENT TO ZERO OR FINE SPAN POT IS NEEDED

10. RECORD MAXIMUM FREQUENCY AND CURRENT ON DATA RECORD REFERENCE FIGURE 2

11. ADJUST FREQUENCY OF GENERATOR TO EXACTLY 50% OF MAXIMUM FREQUENCY, DIGITAL MULTI-METER SHOULD INDICATE 12.00 MA. ±.06, REPEAT 25%, 75% POINTS (RECORD DATA)

TO CHECK FOR LINEARITY AT ANY FREQUENCY POINT INCORPORATE THE FOLLOWING FORMULA:

(F/F MAX. X 16) + 4 MA.

EXAMPLE: ASSUME MAXIMUM FREQUENCY POINT = 2000 HZ
(20.00 MA. POINT)
CHECK FOR LINEARITY AT 750 HZ
750/2000 = .375
16 X ,375 = 6
6 + 4 = 10 DIGITAL MULTI-METER INDICATE 10.00 MA. AT 750 HZ INPUT

TEST COMPLETE

TYPICAL LOOP CONFIGURATIONS

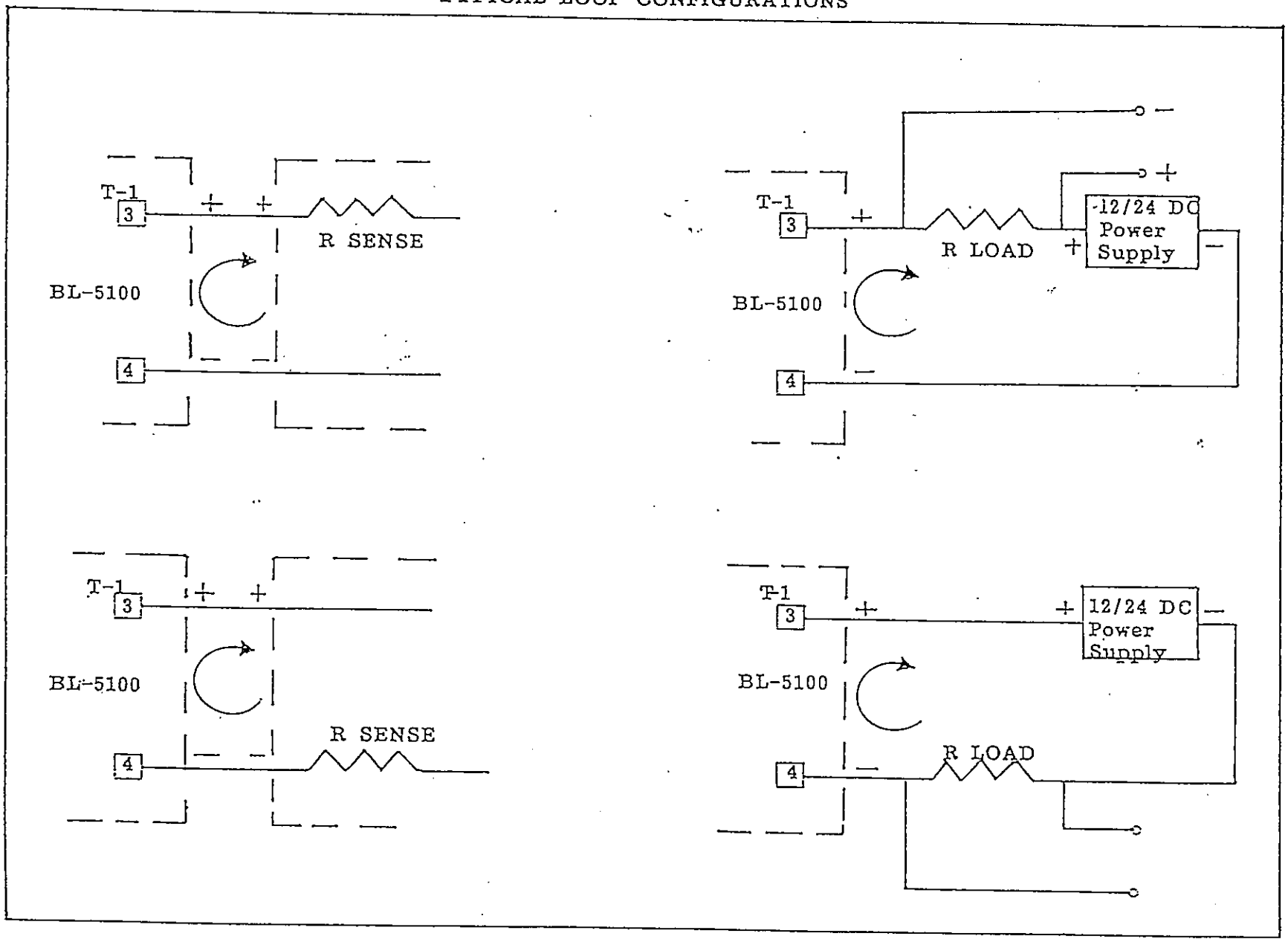

FIGURE 2

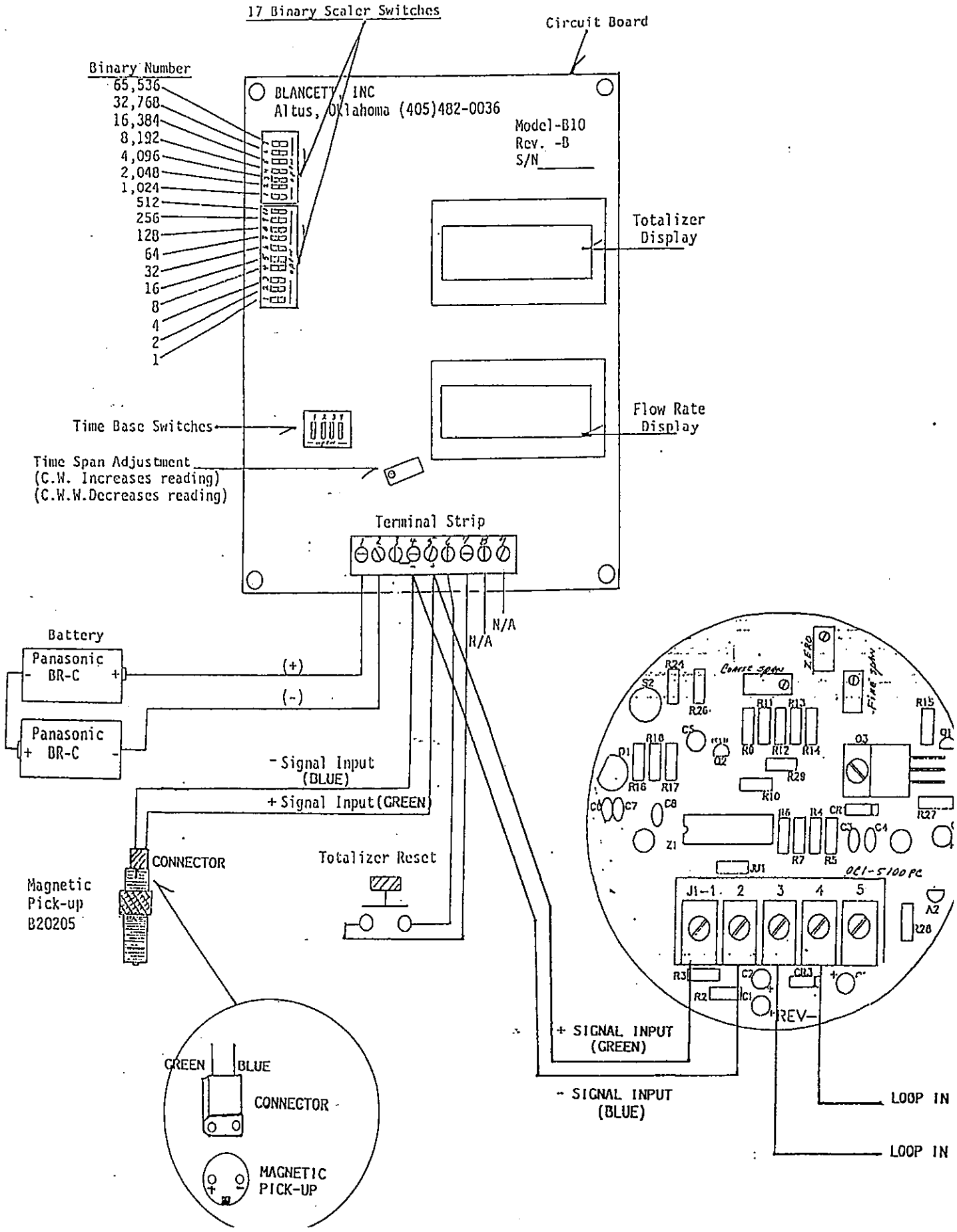
17 Binary Scaler Switches
Circuit Board
Binary Number
65,536
32,768
16,384
8,192
4,096
2,048
1,024
512
256
128
64
32
16
8
4
2
1
BLANCETT, INC
Altus, Oklahoma (405)482-0036
Model-B10
Rev. -B
S/N
Totalizer Display
Flow Rate Display
Time Base Switches
Time Span Adjustment
(C.W. Increases reading)
(C.W.W.Decreases reading)
Terminal Strip
N/A
N/A
Battery
Panasonic BR-C
Panasonic BR-C
(+)
(-)
- Signal Input (BLUE)
+ Signal Input (GREEN)
CONNECTOR
Magnetic Pick-up B20205
Totalizer Reset
GREEN
BLUE
CONNECTOR
MAGNETIC PICK-UP
+ SIGNAL INPUT (GREEN)
- SIGNAL INPUT (BLUE)
LOOP IN
LOOP IN
J1-1
2
3
4
5
REV-

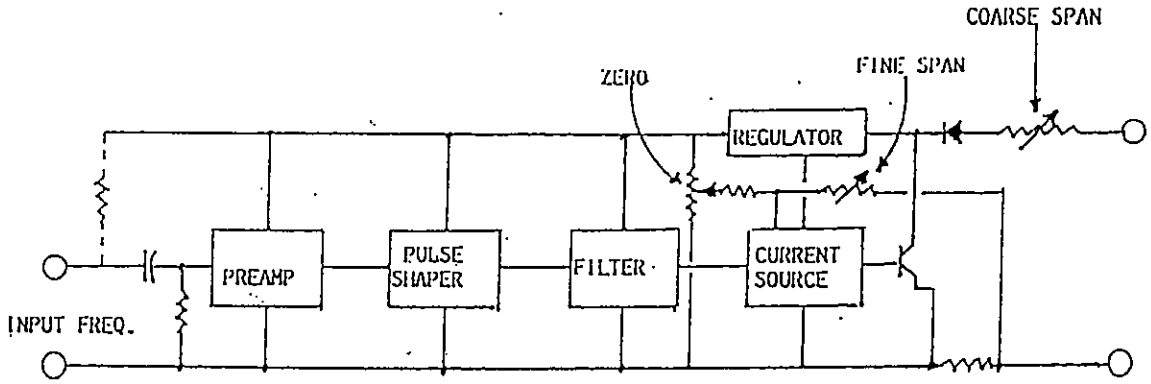

FIGURE 3 SIMPLIFIED BLOCK DIAGRAM

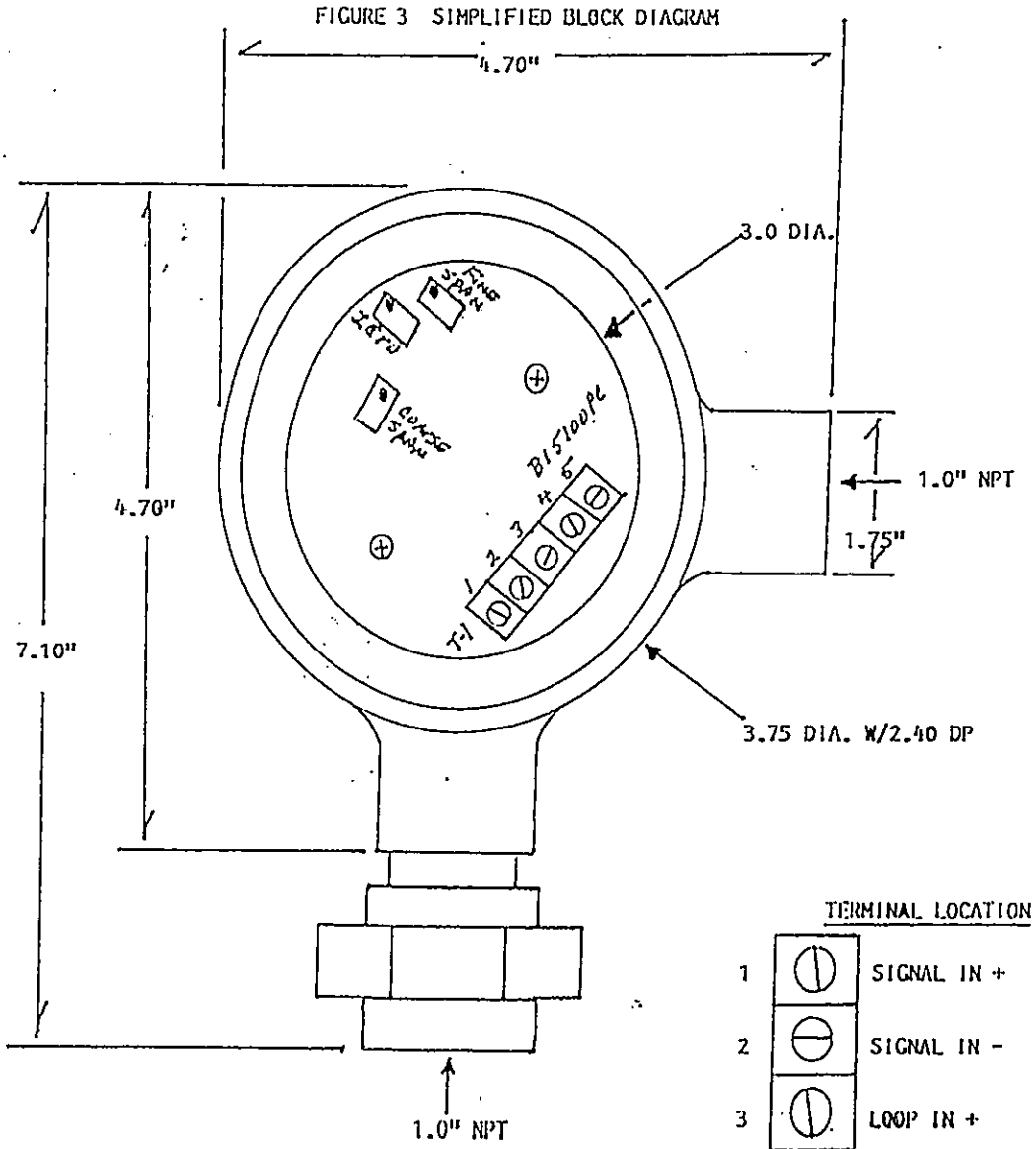

Zero Adj.

FINE Span Adj.

COARSE
SPAN ADJ.

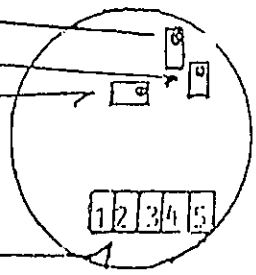

Terminal Location
1 Signal in+
2 Signal in-
3 Loop in+
Loop in-

Model 101140 S/N 04229308

K-Factor 29.45 Max. Load 250 Ohms.

Current	Freq.Hz	GPM	BPD
4 Ma.	00	00	00
8 Ma.	147.25	300	102.75
12 Ma.	294.5	600	205.5
16 Ma.	441.75	900	308.25
20 Ma.	589	1200	411 X 100

Galigher Company Horizontal Vacseal Pumps

VACSEAL PUMPS

INSTALLATION AND OPERATING INSTRUCTIONS

for

HORIZONTAL VACSEAL PUMPS

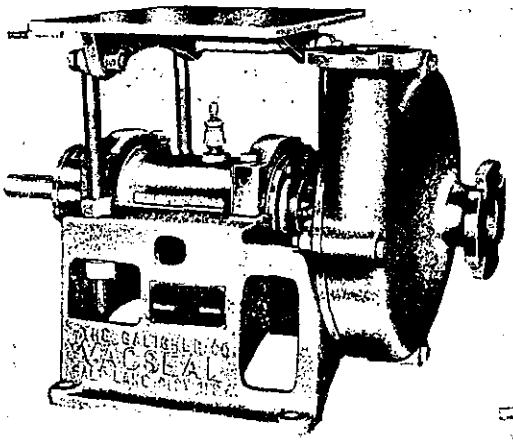

HARD IRON AND ALLOY TYPES

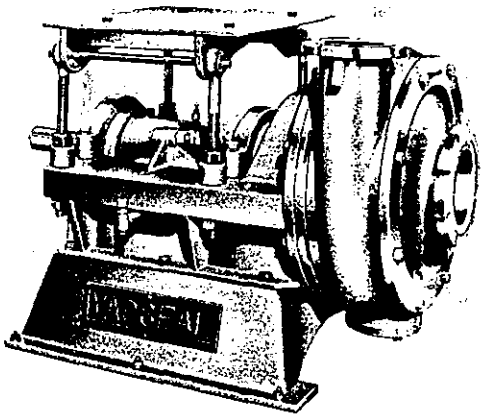

FIXED RUBBER LINER TYPE

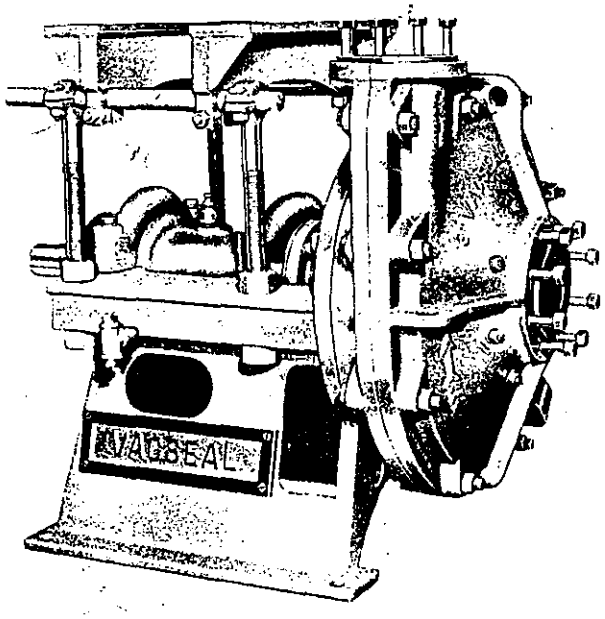

REPLACEABLE RUBBER LINER TYPE

Always Refer to Serial Number of Pump When Ordering Parts

THE GALIGHER COMPANY

HOME OFFICE: 545-585 West 8th South -- P. O. Box 209 -- Salt Lake City, Utah 84110

EASTERN OFFICE: 921 Bergen Avenue (Room 922), Jersey City, New Jersey 07306

August, 1964 U.S.A. Form VP-407a

SUCTION PIPING

VACSEAL PUMPS are designed to operate with a positive suction head and with gland water will operate with negative suction. The suction head under which the pump will operate satisfactorily is variable from one to eighteen feet, depending upon impeller speed. The suction piping should be at least as large in diameter as the pump intake and should be as short as possible in length. A section of the suction pipe should be made removable, in order to permit dismantling of the pump. The feed should be screened to prevent oversize material from entering the pump. This is especially important for rubber lined pumps. An inlet for flushing water in the suction line is recommended.

DISCHARGE PIPING

The pump casing is normally mounted with vertical discharge; but pumps may be converted to bottom horizontal, top horizontal, or downward discharge. The change is made by removing the casing, rotating it to the desired position and re-installing it.

Piping should be run straight, with long radius elbows where necessary, and should be of the size recommended by The Galigher Company. Rubber lined pipe is recommended for abrasive slurries or corrosive liquids.

In general, piping should run horizontally or vertically and not on an incline, other than where required for drainage of lines.

It is recommended that provision for a pressure gauge be made in the discharge piping, close to the pump flange. Readings from the gauge will be helpful in checking pump performance. Avoid excessive weight of discharge pipe supported by pump. Pipe should be supported by means independent of pump. A short rubber connection between pump and piping will protect pump from possible damage due to "line hammer."

PUMP MOUNTING

The pump should be mounted on a level concrete foundation. Shims may be required to level the pump. Sufficient clearance should be provided around the pump for easy access by operators. The 8" x 10 pump can be supplied with or without steel sub-base.

DRIVES

Where V-belt drives are used, a belt guard should be installed. A properly adjusted V-belt drive should allow the belts to be pulled out about ½" to ¾" from the normal position. Under no circumstances should a V-belt drive be drawn up so that belts are extremely tight.

Where direct coupling to the driver through a flexible coupling is used, the shafts should be accurately checked for vertical, horizontal and angular alignment. Consult The Galigher Company if pumps are to be driven by gasoline or diesel engines.

MAXIMUM PARTICLE SIZE AND MAXIMUM SPEEDS

The table at the bottom of page indicates maximum recommended speeds and particle sizes for soft rubber lined pumps. Pumps can be operated satisfactorily at higher speeds, but maximum life of lined parts is dependent on durometer of lining material, particle size and percent solids. Tramp materials, such as nails, metallic scraps, etc., will damage rubber lined pumps, and MUST be screened out of the feed, or removed with magnetic traps.

RECOMMENDED PARTICLE SIZES AND MAXIMUM SPEEDS

	Maximum Sphere Size capable of passing impeller		Maximum Particle Size for good impeller life with Abrasive Materials		*Maximum recommended RPM for best impeller life with highly Abrasive Material	
Pump Size	Rubber Lined	Hard Iron	Rubber Lined	Hard Iron	Rubber Lined	Hard Iron
1½" x 2"	1⅛"	1¼"	⅛"	½"	1800	2250
2 x 2½"	1¼"	1½"	⅛"	¾"	1400	1700
3 x 4"	1⅝"	2"	¼"	1"	1100	1350
4 x 6"	2⅜"	2¾"	¼"	1¼"	950	1200
6 x 8"	3"	3½"	⅜"	2"	800	1000
8 x 10"	5"	6"	⅜"	3"	600	750

*If speeds must be exceeded to obtain the required head and gallonage, consult The Galigher Company. In general, wear will be reduced if the slowest speed possible for a given set of conditions is used. Screening of the feed to rubber lined pumps is essential.

GLAND LEAKAGE

VACSEAL PUMPS are designed to operate on normal installations without gland leakage and without sealing water. If leakage through the packing occurs, the take-up adjustment should be checked. See "Bearing Assembly Take-Up" below. If leakage continues, either drive end casing liner or the expeller vanes are worn. Remove the impeller and examine these parts. Replace if worn.

If leakage at the gland continues after new parts have been installed and the take-up is correctly adjusted, it is probable that the positive suction head is too high causing the gland leakage. This head should be reduced. If the pump installation will not permit reduction of the positive head on the suction side, it will be necessary to either throttle the suction inlet, by means of a valve, or provide sealing water on the gland.

The use of gland water is very seldom required and The Galigher Company should be consulted before making this alteration. Gland leakage can occur if positive suction head is high and impeller speed is relatively low. Although excessive impeller speed for a particular operation is not recommended, gland leakage from high positive suction head can be corrected by increasing impeller speed. When rotation of the impeller stops, the expeller vanes cease to keep the solution from getting into the gland area. The gland will then leak until the case is drained.

ROTATION

BEFORE INSTALLING V-BELTS, THE ROTATION OF THE MOTOR SHOULD BE CHECKED. INCORRECT ROTATION WILL UNSCREW THE IMPELLER, DAMAGING THE PUMP. Correct rotation of the motor and pump is counterclockwise, when the pump is viewed from the driver or pulley end. An arrow on the casing indicates correct rotation.

BEARING ASSEMBLY TAKE-UP

This take-up is factory adjusted. The impeller shaft should turn freely by hand. After impeller wear, leakage at the gland may occur. This can usually be overcome by taking up the clearance behind the impeller as follows:

1. Stop the pump and loosen the four clamp cap screws (part 32) that hold the bearing assembly to the pump pedestal.
2. With impeller installed, pull bearing assembly toward the drive or pulley end of the pump until the impeller rubs the case or liner.
3. The inner take-up nut (part 31) should then be positioned 1/16" away from lug on the bearing assembly.
4. Tighten outer take-up nut until lug on bearing assembly is against inner take-up nut.
5. Locate the pipe tee (where the oil level is checked) in the position indicated on dimensioned parts list. If a dimensioned parts list is not available for your pump, place the tee in its highest position. Refer to "Lubrication" page 4 of this bulletin for further information.
6. **CAUTION** — Secure four clamp cap screws (part 32) only enough to grip the lock washer firmly. Excessive tightening of these clamps can distort bearing housing and cause bearing to heat.
7. Before applying power, check pump to determine if it turns freely.

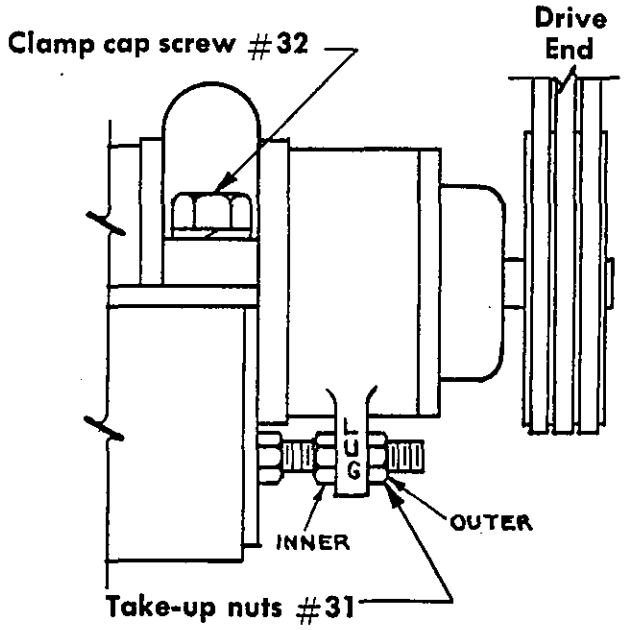

Diagram for 1½" x 2", 2" x 2½", 3" x 4" and 4" x 6" Pumps

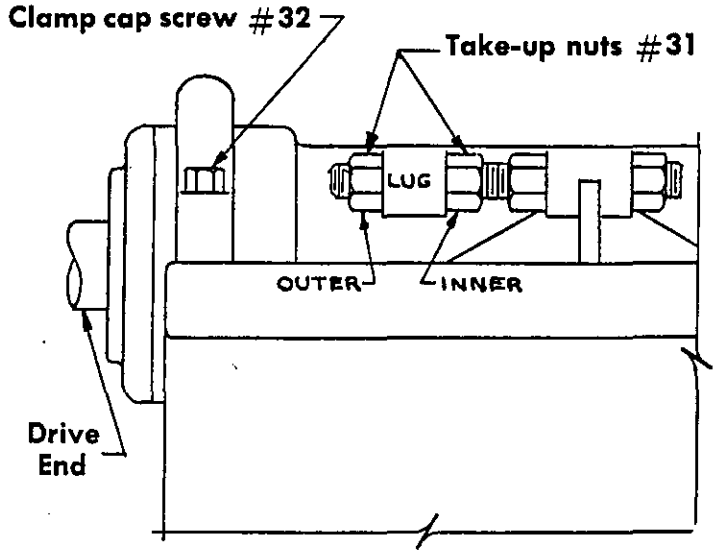

Diagram for 6" x 8" and 8" x 10" Pumps

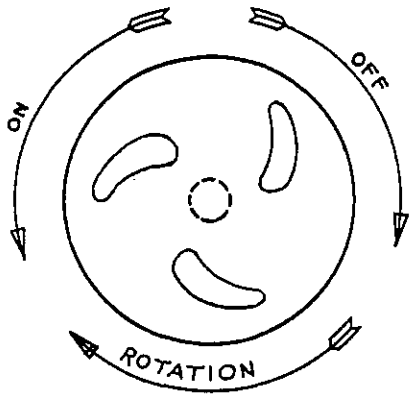

THE VACSEAL IMPELLER

REPLACEMENT OF PARTS

1. The **Impeller** (part 3) should be replaced when the pump ceases to perform correctly because of wear of either pumping or expelling vanes. Care should be taken not to damage pumping or expeller vanes of impeller when removing or installing. To remove impeller, secure shaft by means of a bar inserted in the hole in shaft near flinger. Facing impeller, grasp pumping vanes of impeller by hand and rotate counterclockwise until bar is stopped by pedestal. Then by firm, rapid motion, rotate impeller clockwise imparting sudden snap to impeller as it is stopped by bar striking pedestal. Repeat if necessary. THE IMPELLER THREAD IS LEFT HAND. It is recommended that the casing lining and back plate be inspected whenever an impeller is replaced. When installing impeller, apply Keystone No-Gall or a graphite oil paste to thread and impeller bore to prevent seizing of the impeller to the shaft.

NOTE—IF PUMP IS FOR ACID SERVICE, CARE MUST BE TAKEN TO ASSURE AN ACID SEAL BETWEEN PARTS.

2. **Casing Liners** should be replaced before they are worn through. Leakage at weep holes and opening where casing liner bolts come through casing indicates worn out liner. The liners are vulcanized to steel discs which are secured to the casings by means of threaded studs. Care must be taken to avoid tearing the rubber flanges when installing new liners. **When replacing liners, pull up on all bolts evenly so liner will center in the case, eliminating bulging and buckling of liner.** Do not use metal tools to pry rubber into place. Talc powder, Keystone FSC rubber lubricant, or equal may be applied to surface where ease of installation or removal of part is desired. The liners are not cemented in place. Avoid contaminating the rubber by contact with petroleum base oil or grease. It is recommended that both a flat washer and lock washer be used under the casing liner nut, item 33 (item 72 on 8 x 10 and item 63 on 1½ x 2). Do not tighten nuts excessively as it may damage the liner.

SHUTTING DOWN

DO NOT ALLOW THE PUMP TO STAND WITH SOLIDS IN THE CASING. Flush with water while pump is still running, or remove the inspection cover (part 6), and allow to drain. SERIOUS DAMAGE CA RESULT IF PUMPS ARE STARTED UP WHEN THE CONTAIN SETTLED SOLIDS.

GENERAL TEMPERATURE LIMITATIONS

The maximum permissable temperature for natural rubber linings is 170°F., Neoprene, Butyl, and Buna N, to 200°F., Hard iron and Alloy to 250°F. Consult The Galigher Company if these temperatures must be exceeded, or for liquids other than water.

SPECIAL INSTRUCTIONS FOR REMOVING AND INSTALLING LINERS IN THE 8″ x 10″ VACSEAL PUMP.

The suction cover liner (part 9) has a built in steel reinforcing cone. To remove the suction cover liner, remove the 9 nuts (part 72) and the 3 set screws (part 35). The suction cover should then be supporte (with the intake facing up) by 3 or 4 pieces of 8″ 8″ lumber placed under the rim of the casting. Remove the liner by pushing down on the intake pipe and tapping the studs with a wooden or rubber mallet.

When installing a new liner, press the liner gently into place, and seat the studs. Place a rounded wooden block about 4″ x 4″ against the rubber behind the studs and tap into place with a mallet. The holes in the liners should be lined up accurately with the spacers on the casing flanges so that the rubber will not be pinched. Rubber spacer gasket (part 16) should not be neglected when pump is re-assembled. After considerable wear has taken place, it is possible to adjust impeller clearance by removing gasket. The gasket can be removed by tearing it out after loosening the nuts (part 42) that secure the suction cover to the casing. (See also the take-up adjustment page 2 of this bulletin.) When ordering rubber liners, it is best to order a spacer gasket also.

The **DISCHARGE ADAPTER** (part 17) is a rubber lined increaser. It can be supplied from 8″ to 14″ in size, in either flanged or grooved end. It is supplied as part of the pump and is available as a replacement part.

If wear on the inside edge of the drive line (item 5L) is evident, the wear can be eliminated b shimming the back plate until it is flush with the drive liner. Shims can be made from applicable gasket material.

SPECIAL INSTRUCTIONS FOR REMOVING AND INSTALLING DRIVE END CASING LINERS IN THE 1½" x 2" VACSEAL PUMP MODEL 1.5-VR-100 ONLY.

To remove the drive end liner it is necessary to first remove the gland bushing (part 15). To do this, remove the half glands (part 14) and gland stud nuts (part 39). The gland studs are welded to the gland bushing. If pump is equipped with a lantern ring, the threaded nipple that screws into the gland bushing must also be removed.

SPECIAL INSTRUCTIONS FOR THE 2" x 2½", 3" x 4", 4" x 6", and 6" x 8" MODEL VR-100 (Fixed Liner Pumps).

Do not neglect to re-install the "O" rings (part 46) when re-assembling pumps.

3. **Shaft Sleeve** (part 62) and **Gland Bushing** (part 15). Shaft sleeve should be replaced when it becomes scored. To replace shaft sleeve, remove suction casing, impeller, half glands and packing in this order. Shaft sleeve can then be forced off impeller end of shaft by using slots provided in shaft. To remove gland bushing on all models except 1.5-VR-100 (see special note above), remove drive end liner (or back plate), remove gland bushing screws (part 44). Gland bushing can then be pushed out impeller end of pump. These fittings (shaft sleeve and gland bushings) can be supplied in bronze, stainless steel, or special materials.

4. **Packing** (part 38) is available in standard or acid-proof type. Remove old packing entirely when packing is to be replaced. DO NOT REPLACE INDIVIDUAL RINGS. A **Lantern Ring** is provided when necessary for injection of water or a special grease, when lubrication of packing is required. Do not inject grease without special instructions from The Galigher Company, as the rubber pump liners may be damaged.

5. **Bearing Assemblies,** which include bearing housing, bearings, oil seals, and shafts, are available as pre-assembled units, or if you prefer a stock of individual parts are maintained by The Galigher Company.

Removal of Bearing Assembly is done by first removing suction and discharge lines from pump. Suction casing and impeller are then removed. Clamp cap screws (part 32) and clamps (part 10) are then removed, and complete bearing assembly is ready to be lifted from pump pedestal.

Removal of Bearings and Seals can be done after complete bearing assembly has been removed from pump pedestal. Take off inner and outer bearing caps by removing cap screws. Remove lock nut and lock washer from drive end of shaft. Drop bearing assembly about 6" on drive end of shaft. This will push shaft and inner bearing out of impeller end of bearing housing. Remove seals from bearing caps by driving them out of bearing caps with hammer and punch. DO NOT ATTEMPT TO RE-INSTALL THESE SEALS, ALWAYS USE A NEW SEAL.

Assembling Bearing Assembly — Press inner bearing on shaft. Press shaft and bearing in proper end of housing. Place distance tube over shaft (except on 6" x 8" and 8" x 10" pumps, which do not require this part). Install outer bearing, lock washer and lock nut. Replace bearing caps with seals in place and slide flinger over impeller end of shaft. This completes assembly of bearing asembly and it is ready for placing back on pump pedestal.

LUBRICATION

Oil level should be checked before starting pump. It is preferable that oil level be checked when pump is stopped. If checked when operating be certain air vent is open. To add oil, remove air vent and reducer from top center of the bearing housing and introduce oil at this point until proper level is reached. CAUTION — DO NOT CARRY OIL LEVEL TOO HIGH — IT CAN CAUSE HEATING.

Replace oil after the first 24 hours of operation and thereafter whenever it becomes dirty or contaminated. The recommended oil is a drip-less No. 10 SAE oil containing no detergents nor oil additives.

Grease fittings are provided in the bearing caps for soft grease. The purpose of this grease is to prevent contamination of the oil and to lubricate the oil seals. It does not serve as a bearing lubricant.

OIL CAPACITY:

PUMP SIZE	OIL CAPACITY PINTS
1½ x 2	¾-1
2 x 2½	1-1¼
3 x 4	1½-2
4 x 6	1½-2
6 x 8	4-4½
8 x 10	6-7½

OIL LEVEL (PUMPS WITH OIL LEVEL ARROW)

Fill to level indicated by arrow.

OIL LEVEL (PUMPS WITHOUT OIL LEVEL ARROW)

The proper oil level is indicated on the dimensioned parts list. If a pump has had the impeller adjusted, it is possible that pipe tee, where oil level is checked, has been raised or lowered from its original position, thereby changing the oil level relative to the tee.

The following chart indicates a level at which there is no chance of the bearings running dry, whether tee is in extreme high or low position.

PUMP SIZE	DIM. A
1½ x 2	Center of Sight Glass
2 x 2½	⅜
3 x 4	⅜
4 x 6	⅜
6 x 8	1¼
8 x 10	¾

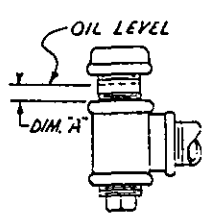

When Ordering Parts, please give all of the following information: Pump size and SERIAL NUMBER, number of part, name of part and type of material (natural rubber, neoprene, stainless steel, etc.), and quantity desired. Refer to the assembly drawings that are supplied with each pump to obtain correct information on parts.

Repair of Rubber Covered Parts. Rubber covered parts can be repaired by The Galigher Company, provided the metal cores are not excessively damaged. Refer to sheet VSP-602a entitled "REPAIR OF RUBBER LINED AND COVERED PARTS" enclosed for further information. Rubber covered parts should be protected from damage, excessive heat, or direct sunlight while in storage. Special instructions for the care of rubber covered goods are available from The Galigher Company on request. Ask for Form R-602.

The Vacseal Gland

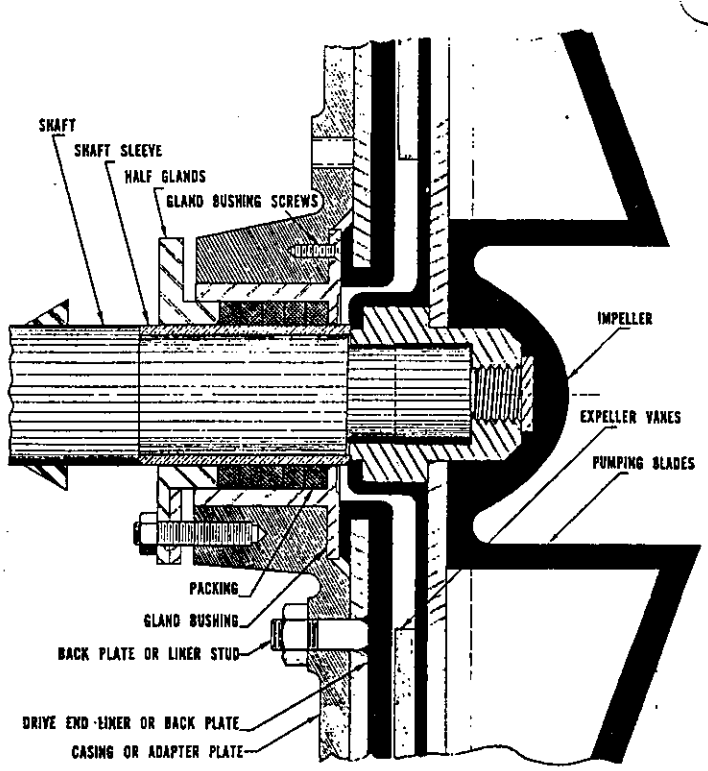

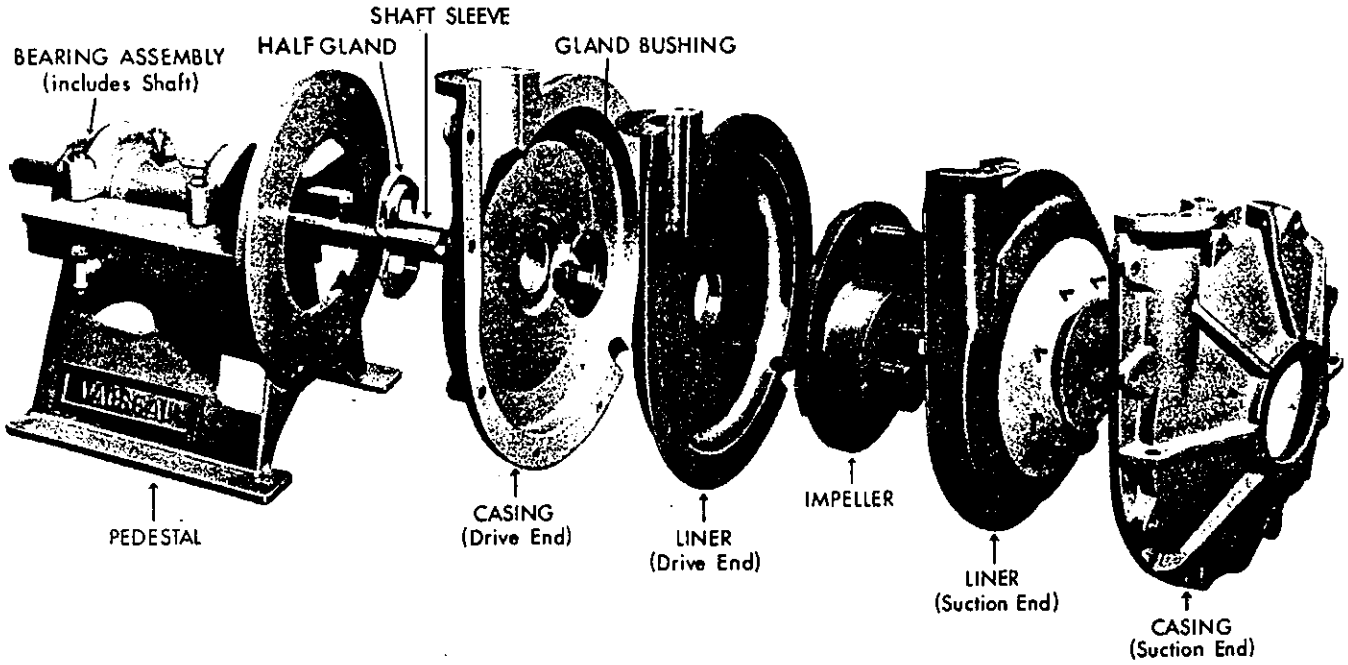

"Exploded" view of a 4" x 6" VACSEAL Pump—split case, replaceable rubber liner type.

REPAIR OF RUBBER-LINED AND RUBBER-COVERED PARTS FOR VACSEAL AND GALIGHER VERTICAL SUMP PUMPS

Many rubber-covered or rubber-lined parts for the VACSEAL Pump and the Galigher Vertical Sump Pump can be salvaged for re-covering by proper maintenance and inspection procedure.

To assist our customers in this regard, particularly in the inspection of metal cores of the pump wearing parts prior to shipping to our plant in Salt Lake City, Utah, for repairing, we have prepared the following guide. The primary purpose of this guide is to save our customers transportation and handling costs on parts that cannot be repaired. The guide has been prepared with consideration that —

(1) repair and re-covering cost must not exceed new part prices;
(2) repaired and re-covered part must give satisfactory service to the user when returned to service.

Removal of rubber is accomplished by burning and should be performed with caution. Several parts ignited together can generate enough heat to warp and damage the metal. As burning progresses, melted rubber should be scraped away from metal to reduce heat. It is obvious the metal must be cleaned properly in order to insure effective inspection. Do not weld patches over holes in cast iron parts.

Replaceable Liner-type Casing

Metal portions of replaceable liners CANNOT be repaired and re-covered to the advantage of the user.

Fixed Liner-type Casing (VACSEAL Part 1, Sump Pump Part 10)

The casing CANNOT be repaired and re-covered if —

(a) it contains apparent cracks;
(b) more than two stud holes have been destroyed due to stripped threads, abrasion, or corrosion (such holes should not be adjacent);
(c) holes are worn through the metal;
(d) either mounting flange face is grooved completely through from inner to outer edge.

VACSEAL casings should be accompanied by inspection covers (Part 6). No extra charge is made for re-covering inspection covers if they accompany corresponding casings.

Fixed Liner Suction Covers (VACSEAL Part 2, *Sump Pump Part 7)

The suction cover CANNOT be repaired and re-covered if–

(a) it contains apparent cracks;
(b) holes are worn through the metal;
(c) over 25% of the area has been pitted deeply; even wear over the total area and without deep pits can be covered satisfactorily.

Back Plates (VACSEAL Part 4)

The VACSEAL back plates CANNOT be repaired and re-covered if —

(a) they contain apparent cracks;
(b) more than two stud holes are destroyed due to stripped threads, abrasion, or corrosion; holes should not be adjacent;
(c) more than two bosses are worn below the original machined surface; bosses should not be adjacent;
(d) holes are worn through the plate.

Adapter Plates (VACSEAL Part 8)

These can be re-lined with rubber but gland bushings (Part 15) must be removed prior to burning or shipping.

Impeller (Part 3)

The pump impeller CANNOT be repaired if —

(a) Recovered 7 times on 1½" through 4" sizes and 5 times on 6" and 8" (VACSEAL PUMPS Only).
(b) sufficient metal has been worn or corroded away to impair the balance; this is serious especially if wear is not distributed equally — for instance, confined to half the disc;
(c) holes are worn completely through the disc;
(d) damage to vanes is more than VERY MINOR;
(e) threads are destroyed or in poor condition.

Sump Pump Shafts, Pedestals, Discharge Pipes (Parts 6, 1, 26/49

These are repairable if metal is not damaged.

SHIPPING INSTRUCTIONS — A purchase order for repair of the rubber-lined and rubber-covered parts should be mailed to The Galigher Company, Box 209, Salt Lake City, Utah, and the packing list accompanying the parts must refer to the purchase order number. The purchase order and packing list must show all parts by QUANTITY, PART NAME, PUMP SIZE, RUBBER TYPE (natural, neoprene, etc.), and, whenever possible or practical to do so, list SERIAL NUMBER OF PUMP TO WHICH PARTS APPLY. When VACSEAL casings are returned, inspection covers should accompany them. Purchase orders should STATE WHETHER IRREPAKABLE PARTS SHOULD BE DISCARDED, RETURNED, OR REPLACED BY NEW PARTS.

Customer should ship parts FREIGHT PREPAID to The Galigher Company, 545 West 8th South Street, Salt Lake City, Utah. Return shipment will be by collect freight, cheapest way, unless specific instructions are issued on purchase order. All parts returned for repair are inspected when received and also after rubber removal, if not removed by customer. Customer then is informed of parts condition if they are found defective and irreparable.

CHARGES

In general, the repair price of all molded pump parts and fixed liner VACSEAL parts is 60% of the new price, plus any machining or welding charge. If the rubber is removed by the customer, the repair charge is 45% of the cost of the new parts, plus any machining or welding charge. Discounts are subject to change and DO NOT APPLY to non-molded items such as 4", 6" and 12" Sump Pump cases, pedestals, discharge pipes, etc. Repair prices on such items available on request or performed on labor and material basis.

*1½" and 2½" Sump Pump sizes only.

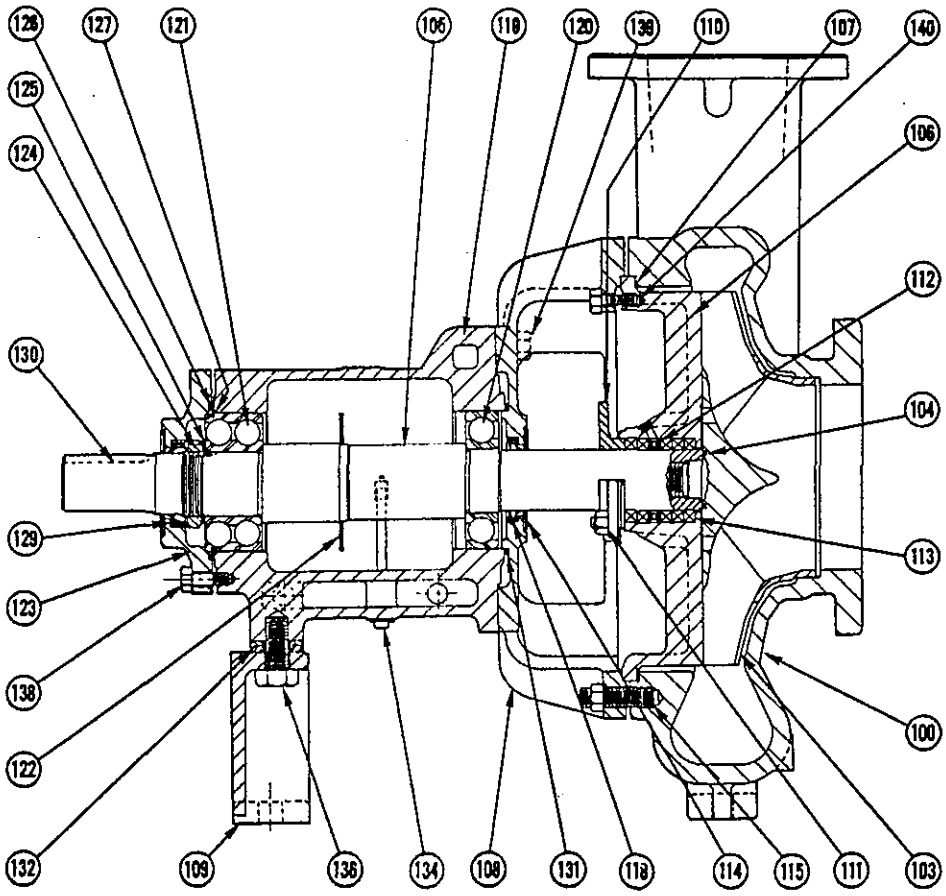

PARTS AND MATERIALS LIST

Item No.	Part	Ductile Iron	Durcomet 100	316 S.S.	Durimet 20	Monel	Nickel	Chlorimet 2	Chlorimet 3	Titanium
		Wet End Alloy								
100	Casing	Ductile Iron	Durcomet 100	316 S.S.	Durimet 20	Monel	Nickel	Chlorimet 2	Chlorimet 3	Titanium
103	Impeller	Durcomet 100	Durcomet 100	316 S.S.	Durimet 20	Monel	Nickel	Chlorimet 2	Chlorimet 3	Titanium
105	Shaft*	Steel[2]	DC8-Steel	DC8-Steel	DC8-Steel	DC8-Steel	DC8-Steel	DC8-Steel	DC8-Steel	Ti/304 S.S.
106	Rear Cover Plate	Ductile Iron[1]	Durcomet 100	316 S.S.	Durimet 20	Monel	Nickel	Chlorimet 2	Chlorimet 3	Titanium
110	Gland[3]	Durimet 20	Durimet 20	Durimet 20	Durimet 20	Durimet 20	Durimet 20	Durimet 20	Durimet 20	Titanium

Materials Common To All Alloys Unless Otherwise Noted

104	Impeller Gasket*	TFE & Silicone Rubber	124	Bearing Lock Nut	Steel
107	Rear Cover Plate Gasket*	Durabla	125	Bearing Lock Washer	Steel
108	Bearing Housing Adapter	Cast Iron	126	Bearing Cover Gasket	Cork
109	Bearing Housing Foot	Cast Iron	127	Bearing Shim*	Steel
111	Gland Studs/Hex Nuts	304SS/303SS[6]	129	O.B. Oil Seal*	TFE
112	Seal Cage[3]*	TFE	130	Shaft Coupling Key	Steel
113	Molded Ring Packing[3]*	TFE-Asbestos[5]	131	Bearing Housing Adapter "O" Ring	Neoprene or SBR
114	Inboard Deflector	TFE	132	Spherical Washer for Foot	Steel
115	Studs/Hex Nuts-Casing	304SS[4]	133	Trico Oiler (not shown)	Steel-Plastic
118	Inboard Oil Seal*	TFE	134	Bearing Housing Vented Drain Plug	Plastic
119	Bearing Housing	Cast Iron	136	Cap Screw for Foot	Steel
120	I.B. Bearing*	Steel	138	Capscrews for Bearing Cover	Steel
121	O.B. Bearing*	Steel	139	Machine Bolts for Bearing Housing	Steel
122	Oil Slinger	Steel	140	Capscrews for Adapter to Cover	Steel
123	Bearing Cover	Cast Iron			

*Parts normally stocked by customers for emergency repair.

[1]Jacketed Cover plates are carbon steel.

[2]Steel shaft is hardened to over 500 Brinnel under packing area to minimize wear. When mechanical seals are supplied it is necessary to use stainless steel or DC8 shaft.

[3]Used in packed pumps only.

[4]Part is Cr—Mo steel on Ductile Iron and Carbon Steel pumps.

[5]Ductile Iron and Carbon Steel pumps have plain asbestos.

[6]Part is Carbon Steel on Ductile Iron and Carbon Steel Group I and Group II pumps.

GROUP III PUMPS (Standard only)

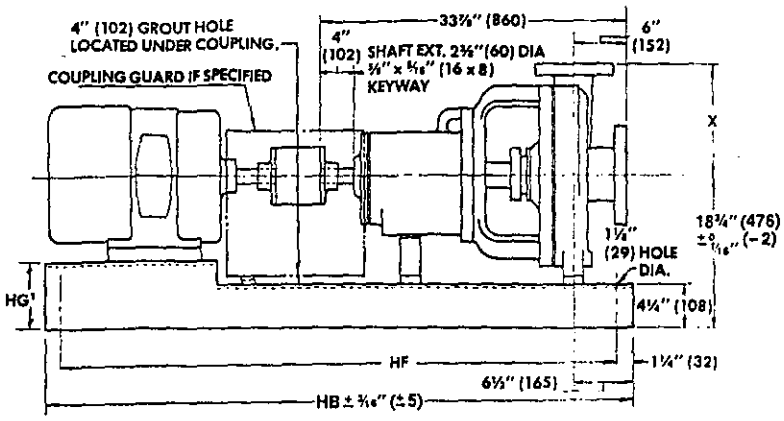

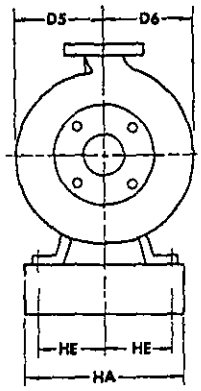

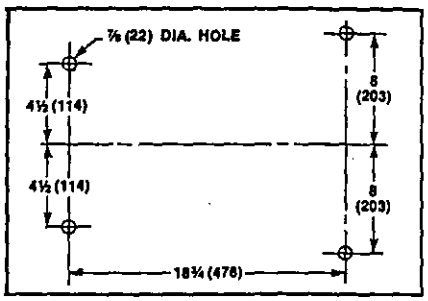

Baseplate	WI lbs (kg)	HA in (mm)	HB in (mm)	HE in (mm)	HF in (mm)	HG MAX. in (mm)	HG_1 in (mm)	Motor Frame	HD in (mm)
58	390(175.5)	20(508)	68(1727)	8½(216)	65½(1664)	4¼(108)	9¾(248)	284TS TO 365U	18¾(476)
59	540(243.0)	22(559)	80(2032)	9½(241)	77½(1968)	4¼(108)	7¾(197)	404US TO 445T	18¾(476)
60	580(261)	25(635)	84(2134)	11(279)	81½(2070)	4¼(108)	6¼(159)	505 TO 8144	18¾(476)

Group III Standard Pumps

Standard Pumps	Suction Size in (mm)	Discharge Size in (mm)	Weight lbs (kg)	X in (mm)
8x6-14A	8(200)	6(150)	680(306.0)	16(406)
8x6-16	8(200)	6(150)	740(333.0)	18(457)
10x8-17	10(250)	8(200)	835(375.8)	20(508)

Group I

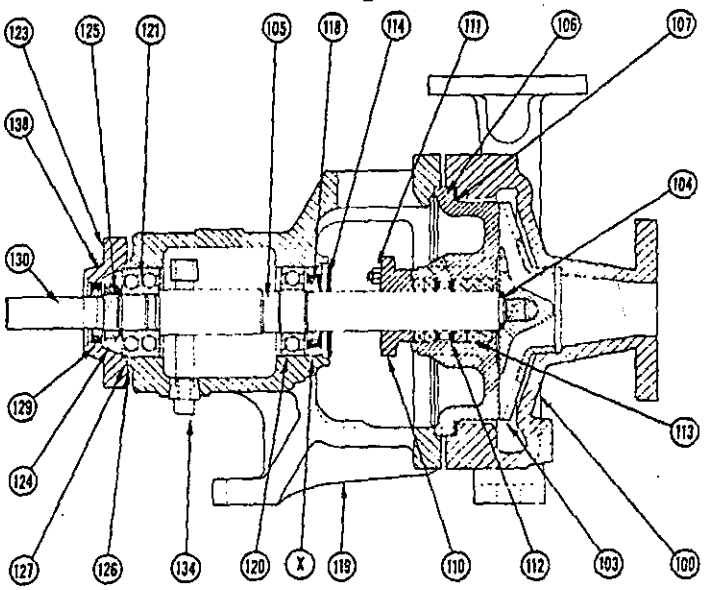

Group II

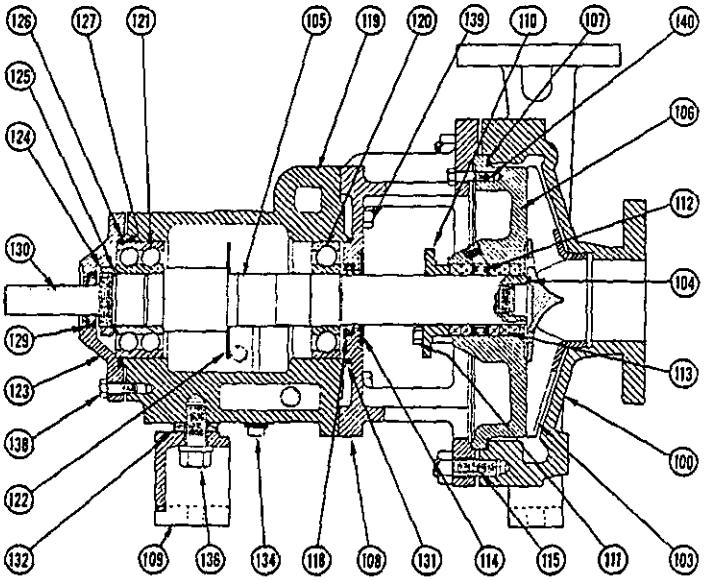

Castings	ASTM Specification
Ductile Iron	A395
Durcomet 100	A296 & A351, Grade CD-4M
Type 316 SS	A296, Grade CF-8M
Carbon Steel	A216, Grade WCB
Durimet 20	A296 & A 351, Grade CN-7M
Monel	A296, Grade M-35
Nickel	A296, Grade CZ-100
Chlorimet 2	A494, Grade N-12M-2
Chlorimet 3	A494, Grade CW-12M-2

Alternate Shaft Materials

Description	ASTM Specification
Type 304 SS	A276
Type 316 SS	A276
Hastelloy B	B335
Hastelloy C	B336
Monel	B164
Nickel	B160
Carpenter 20	B473
Ceramic	None
Superchlor	None

U.S. Motors Varidrive Installation and Maintenance Manual

VARIDRIVE®

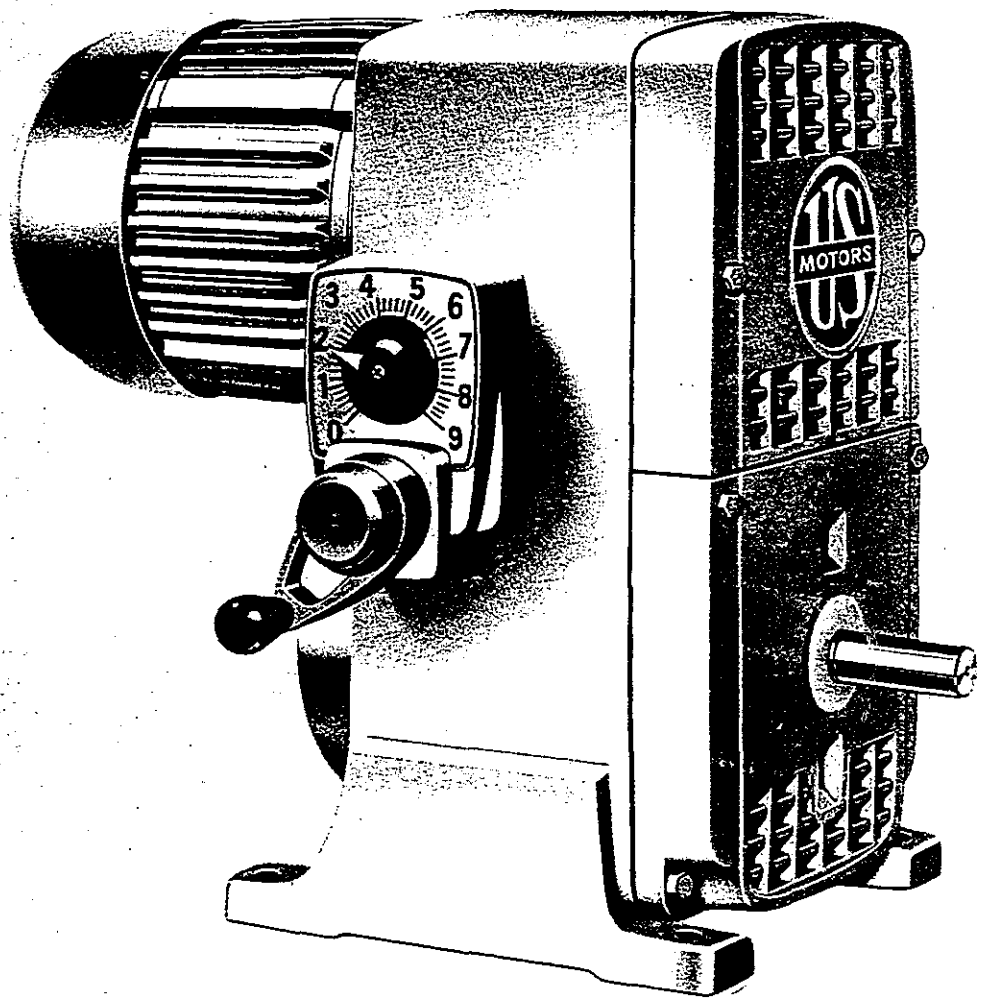

P/N 343756

INSTALLATION AND MAINTENANCE MANUAL

USMOTORS
DRIVEN BY YOUR SUCCESS

TABLE OF CONTENTS

SECTION	PAGE
SAFETY	2 – 3
GENERAL INFORMATION	4
FRAME AND TYPE INFORMATION	5
BELT CHANGING INSTRUCTIONS	6 – 14
Frame 1	7
Frames 6,10,15 & 25	6 – 9
Frames 23,44 & 55	10
Frame 65	11
Frame 70	12 – 13
Frame 84	14 – 15
ELECTRIC REMOTE SPEED INDICATOR	16 – 17
Installation Instructions	16
Mounting Dimensions	17
ELECTRIC REMOTE CONTROL INSTRUCTIONS	18 – 19
Type ERR & ERRL	18
Type ERM	19
PNEUMATIC VARITROL INSTRUCTIONS	20 – 25
Installation	20
Operation & Troubleshooting	21 – 24
Air Pressure Settings	25
Using Time Delay Control	25
MECHANICAL REMOTE CONTROLS	26 – 43
LUBRICATION INSTRUCTIONS	44
OIL CAPACITY – VARIDRIVE SYNCROGEAR	45
ENDOLUBE REPLACEMENT	46 – 48
PARTS ORDERING INFORMATION	49
INSTALLATION RECORD	50

SAFETY FIRST

High voltage and rotating parts can cause serious or fatal injury. Safe installation, operation and maintenance must be performed by qualified personnel. Familiarization with and adherence to NEMA MG2, the National Electrical Code, and local codes is recommended. It is important to observe safety precautions to protect personnel from possible injury. Personnel should be instructed to:

1. Avoid contact with energized circuits or rotating parts.
2. ALWAYS DISCONNECT ELECTRICAL POWER AT THE MOTOR STARTER, FUSE BOX, OR CIRCUIT BREAKER BEFORE HANDLING ELECTRICAL CONNECTIONS. DOUBLE CHECK TO BE SURE POWER IS OFF, AND THAT IT CAN NOT BE TURNED ON WHILE YOU ARE WORKING ON THE EQUIPMENT.
3. Act with care in accordance with prescribed procedures in handling and lifting this equipment.
4. Be sure unit is electrically grounded and proper electrical installation wiring and controls are used consistent with local and national electrical codes. Refer to "NATIONAL ELECTRICAL CODE HANDBOOK" – NFPA NO. 70. Employ qualified electricians.
5. Be sure equipment is properly enclosed to prevent access by children or other unauthorized personnel in order to prevent possible accidents.
6. Be sure shaft key is fully captive before unit is energized.
7. Avoid contact with capacitors until safe discharge procedures have been completed.
8. All units are shipped without oil. Always be sure oil lubricated units are filled with correct oil to proper level before operating.
9. Provide proper safeguards for personnel against rotating parts and applications involving high inertia loads which can cause overspeed.
10. Avoid extended exposure to equipment with high noise levels.
11. Be familiar with the equipment and read all instructions thoroughly before installing or working on equipment.

Cont'd

CAUTION — Please observe the following items:

12. The VARIDRIVE handwheel should never be turned at any time other than while the drive is operating. Turning the handwheel while the drive is not operating can result in a damaged VARIBELT, or damaged control linkage.

13. Never try to force the handwheel beyond the speeds shown on the nameplate.

14. The numerals on the handwheel indicator are reference indication only of an approximate point in the speed range of the drive. The handwheel indicator is not intended to be used to indicate actual speed output. Electric tachometers are available at nominal cost for accurate speed indication and should be used where knowledge of operating speed is necessary to the proper or safe function of your driven machine.

15. Should you remove the spring from the driven variable shaft use caution. The spring is under compression. The force exerted by the spring on larger frame sizes can approach several hundred pounds. "Captive Spring" designs, which prevent accidental release of the spring are incorporated in recent production frame sizes 15 (5 HP), 23, 25, 44, 55, 65, 70 and some 84 frames.

16. VARIDRIVES are packaged for shipment with the assumption that if placed in storage, it will be in a clean, dry inside area. If other storage conditions prevail, special packaging should be specified on the order.

17. Use safety glasses to protect your eyes, especially if cover plates are removed to inspect equipment while it is running or while a mallet or hammer is used.

Your U.S. VARIDRIVE has been accurately adjusted and tested before shipment. No adjustments are normally necessary if the drive is operated under normal conditions.

See the Table of Contents and the following pages in this manual for more specific information.

The U.S. VARIDRIVE is a constant torque, variable speed, belt drive transmission, normally furnished complete with an electric motor. Low and intermediate speeds employ a geared output using either right angle worm gears (Figure 1) or helical steel parallel gears (Figures 2 & 3).

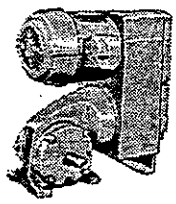

TYPE VAV-JF-GW
SINGLE REDUCTION

FIGURE 1

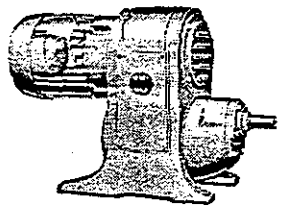

TYPE VEU-TF-GH
SINGLE REDUCTION

FIGURE 2

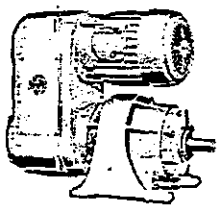

TYPE VEV-TF-GD
DOUBLE REDUCTION

FIGURE 3

Units, furnished with gears require oil lubrication. The bearings located within the gear housing are lubricated by the oil when the proper oil and oil level is maintained. Other bearings, located in the motor and the VARIDRIVE belt transmission are grease lubricated and many require periodic relubrication for longest life and good maintenance practice.

Other mechanical parts such as chain, cams, etc. may be lubricated with grease or oil now and then to avoid corrosion and undue wear. These parts are normally common to the handwheel control and handwheel control mechanism.

Drives which incorporate U.S. ENDOLUBE construction (Frame sizes 1, 6, 10, 15, 23, 25, 44 and 55), do not require relubrication of the transmission shafts. Frames 65, 70 and 84 do not use ENDOLUBE, therefore, these larger drives do require periodic lubrication of the drive shafts.

When your drive includes a geared take-off, the gear case must be filled with the proper oil to correct oil level before placing the unit into operation. A nameplate or decal may be found on the gear case which specified the proper oil. Periodic oil changes are recommended; initially oil should be drained and replaced after the first 100 hours of operation. Oil should be changed at least once or twice each year thereafter, or more often depending on operating conditions.

VARIDRIVES are typically described by frame and type in basic symbol groups, from which the VARIDRIVE components can be determined according to the following tables.

VARIDRIVE FRAME

6	145	5
VARIDRIVE BELT CASE SIZE DESIGNATIONS	MOTOR FRAME SIZE DESIGNATIONS	GEAR REDUCER SIZE DESIGNATIONS
6, 10, 15, 23, 25 44, 55, 65, 70, 84	STANDARD NEMA FRAMES SIZES: 56 TO 445	PARALLEL SHAFT — USEM SIZES 5 to 70 RIGHT ANGLE — 6, 11, 20

VARIDRIVE TYPE

VAV	TF	GR

VARIDRIVE BELT CASE TYPE DESIGNATIONS		MOTOR TYPE DESIGNATIONS		GEAR REDUCER TYPE DESIGNATIONS	
VA	BASE MOUNTED 6, 10, 15 Case	AF, RF	OPEN DRIPPROOF	SINGLE REDUCTION	
VAV	FOOTLESS FRAME (6, 10, 15 Case)	TF, JF	TOTALLY ENCLOSED FAN COOLED	GR GB	FOOTED PARALLEL HELICAL GEARS
VE	HORIZONTAL FOOTED (23, 25, 44, 55, 65, 70 Case)	TFN, JFN	TOTALLY ENCLOSED NON VENTED	GH GS	FOOTLESS PARALLEL HELICAL GEARS
VEU	UPRIGHT FOOTED (23, 25, 44, 55, 65, 70, 84 Case)	EF, LF	EXPLOSIONPROOF FAN COOLED	DOUBLE REDUCTION	
VEV	FOOTLESS FRAME (23 Case)	EFN, LFN	EXPLOSIONPROOF NON VENTED	GD GL	FOOTED PARALLEL HELICAL GEARS
VEV–1	FOOTLESS FRAME Suffix "1" is used to indicate the longer frame center distance sometimes required for motor and take off shaft on same side. (25, 44, 55 Case)	TFC	ALLGUARD	TRIPLE REDUCTION	
				GM	FOOTED PARALLEL HELICAL GEARS
		JFC	PROCESS DUTY FOOD & BEVERAGE DUTY	RIGHT ANGLE WORMS	
				GW	FOOTED SINGLE REDUCTION
				GWB	FOOTED DOUBLE REDUCTION WORM AND HELICAL GEARS
				GWV	FLANGED OUTPUT

NOTE: Only two frame and two type designations (VARIDRIVE and motor) will appear on nameplate on gearless VARIDRIVES.

EXAMPLE: Model number 8126 (Section 301, page 4)
1 HP, 1900–190 RPM, frame 6–145T–5, type VAV–TF–GR
Frame (6–145T–5): 6 case VARIDRIVE with 145T frame motor and size 5 gear reducer
Type (VAV–TF–GR): Footless frame with TEFC motor and single reduction, footed, parallel helical gear reducer.

The U.S. VARIBELT is designed expressly for your particular U.S. VARIDRIVE. It has been chosen to match the capacity and operating conditions of the drive. Use of any belt other than a U.S. VARIBELT voids the Warranty and can seriously affect the performance, capacity and life of your U.S. VARIDRIVE.

The following instructions are general. Your drive has an instruction plate located on the VARIDRIVE frame case which specifically covers both lubrication and belt changing. Refer to it for more specific information.

It is always to your advantage to replace the VARIBELT before complete failure. Rumbling or excessive vibration may indicate that the belt is approaching failure and should have prompt inspection. Remove the side cover on the drive to inspect the belt — if it is frayed on the edges, or if cracks in the cog roots have progressed through the side wall, the belt should be replaced.

NOTE: Whenever working on the drive it is good safety practice to remove the fuses from the fuse clips in the electrical supply either at the motor starter or main to prevent accidental starting.

1 FRAME

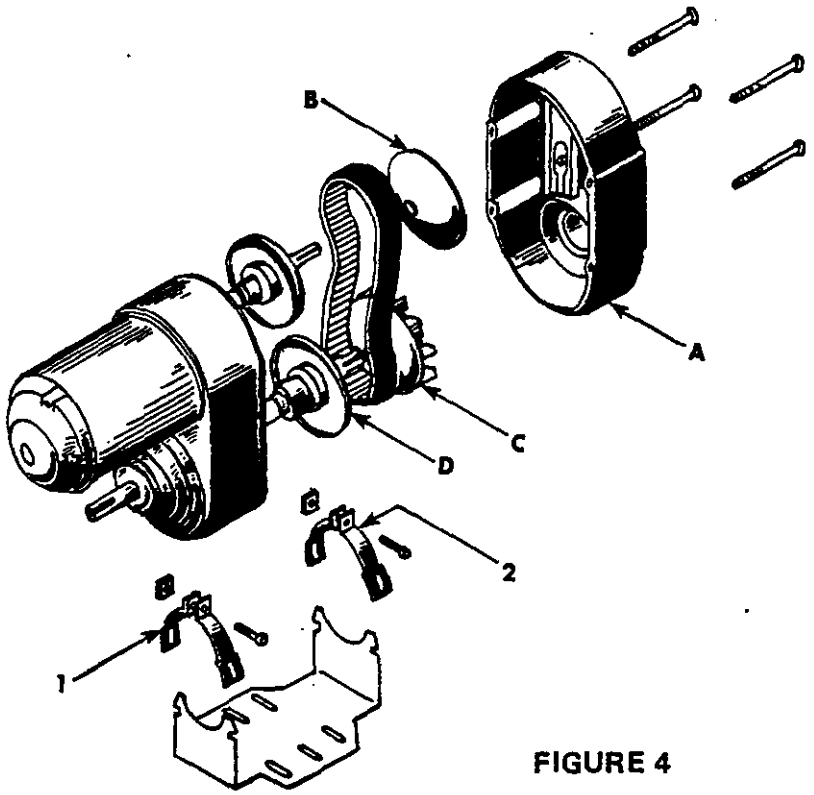

FIGURE 4

1 FRAME — REFER TO FIGURE 4

1. Open power supply disconnect and lock open.
2. Remove entire VARIDRIVE Unit from mounting base (gearless drive only) by disassembling base clamps at locations (1) and (2).
3. Turn control to low speed.
4. Remove four cover screws and remove cover (A).
5. Slide VARIDISC (B) free from motor shaft and remove VARIBELT.
6. Install new VARIBELT between VARIDISCS (C) and (D).
7. Replace VARIBELT over motor shaft and reassemble VARIDISC (B) against belt.
8. Replace cover (A) and tighten four screws.
9. Remount VARIDRIVE Unit in base and tighten base clamps (1) and (2).

6, 10, 15, and 25 FRAME

"C" ASSEMBLY

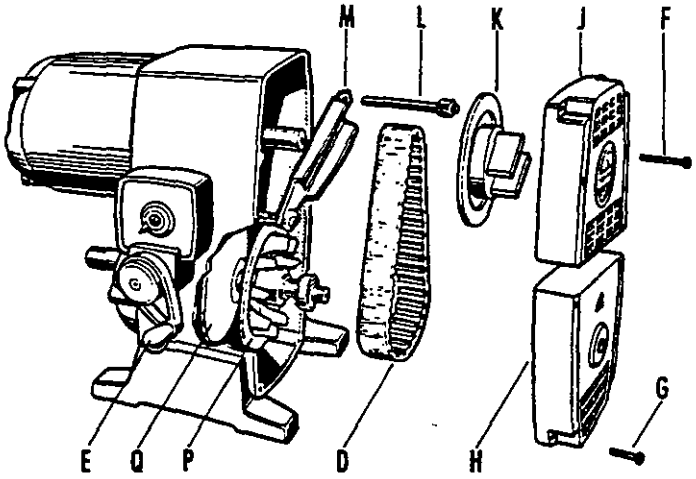

FIGURE 4

"Z" ASSEMBLY

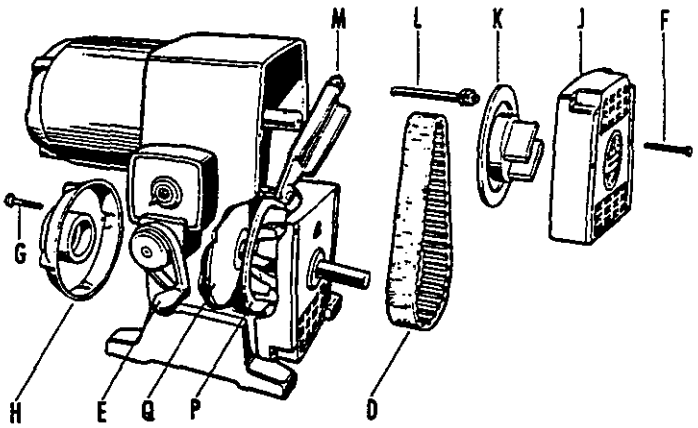

FIGURE 5

6, 10, 15 and 25 FRAMES — REFER TO FIGURES 4 and 5

1. If possible run the drive to high speed by turning the handwheel so that the indicator is at maximum speed setting.
2. Open power supply disconnect and lock open.
3. Remove the front cover (J).
4. Remove the support bracket (H).
5. Use a piece of wood or other non-metallic material as a wedge and place it between the discs (P & Q) on the variable speed end to block them in the open position. Use care not to nick or damage disc surfaces.
6. Remove the stud (L) holding the formed steel shifting lever (M). Note the position of the two locknuts on stud (L) for reassembly in same position.
7. Move shifting lever (M) to free VARIDISC (K) without removing chain from shifting lever (M).
8. Remove VARIDISC (K) then withdraw belt (D) through bracket (H) opening in variable end.
9. Replace belt and reassemble by reversing above steps 1 through 7.

Cont'd

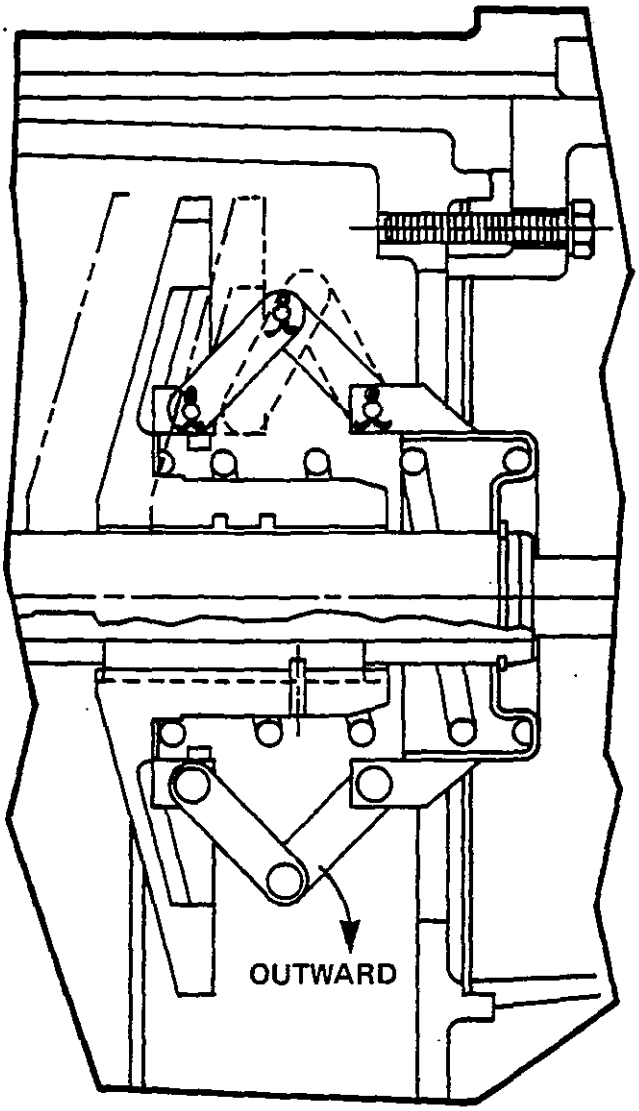

FIGURE 6

10. On units supplied with a spring compensator (Refer to fig. 6). Make sure compensator arms are open outward when discs are assembled to shaft.

11. Rotate unit by hand and turn control wheel (DO NOT FORCE HANDWHEEL) until belt slack is taken up.

23, 44 and 55 FRAME

"C" ASSEMBLY

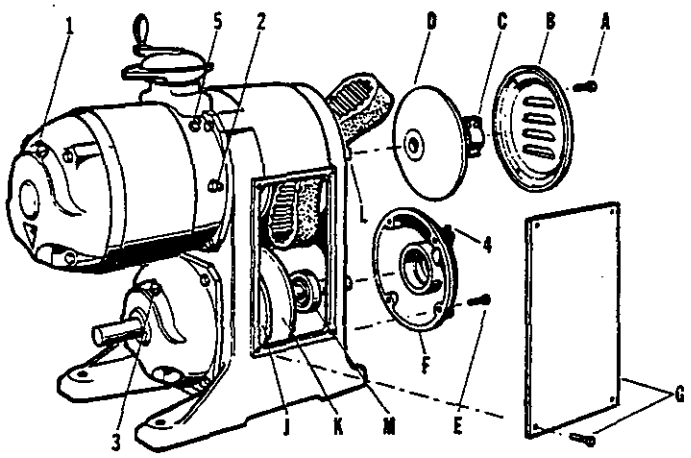

FIGURE 7

"Z" ASSEMBLY

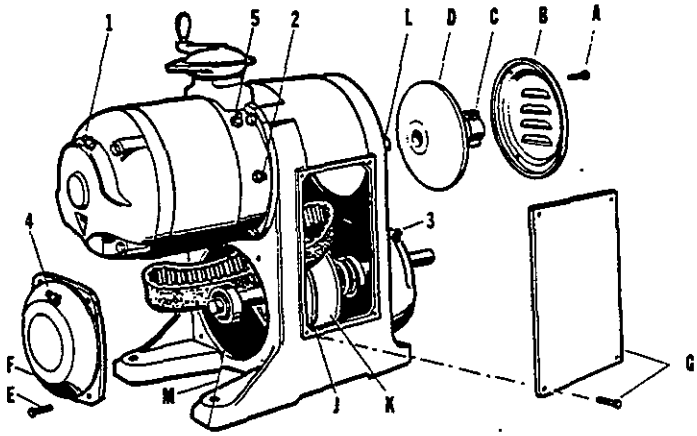

FIGURE 8

23, 44 and 55 FRAMES — REFER TO FIGURES 7 and 8

1. With VARIDRIVE running, adjust control wheel to high speed-position.
2. Open power supply disconnect and lock out.
3. Remove front cover (B),support bracket (F) and side covers (G).
4. Use a piece of wood or other non-metallic material as a wedge and place it between the discs (J & K) on the variable speed end to block them in the open position. Use care not to nick or damage disc faces.
5. Carefully mark the axial and radial position of stationary VARIDISC (D) in relation to shaft **BEFORE** removal.
6. Loosen clamping bolts (C) and slide VARIDISC (D) off shaft. Wedge open the split hub if VARIDISC is tight on shaft.
7. Withdraw VARIBELT, over motor shaft and remove through bracket opening at disc (D) for "C" flow and opening at bracket (F) for "Z" flow.
8. Install new VARIBELT.
9. Install VARIDISC (D) to its original premarked position and tighten clamping bolts.
10. Rotate unit by hand and turn control wheel (DO NOT FORCE HANDWHEEL) until belt slack is taken up.
11. Replace brackets and covers.

65 FRAME

"C" ASSEMBLY

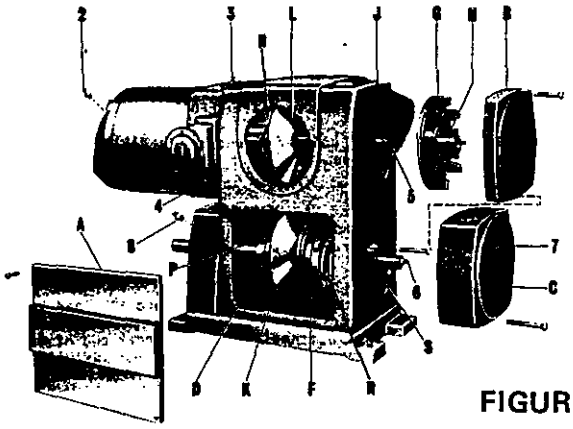

FIGURE 9

"Z" ASSEMBLY

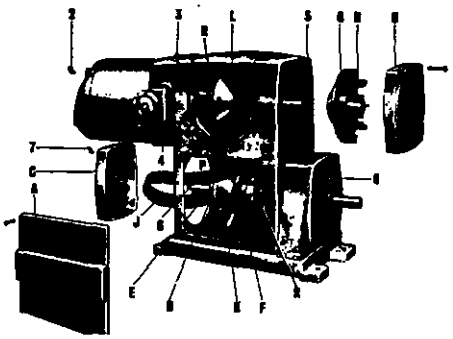

FIGURE 10

65 FRAME – REFER TO FIGURES 9 and 10

1. With VARIDRIVE running, adjust control wheel to high speed position.
2. Open power supply disconnect and lock open.
3. Remove covers (A & B) and lubrication pipe extension.
4. If your unit is "C" assembly refer to Figure 9 and assemble three of the hex head cap screws which were removed from cover (B) into spring assembly (S) and compress spring about 1/8 inch.

4A. If your unit is "Z" assembly refer to Figure 10 and remove locknuts (D) from studs (E) and advance studs until the spring loaded VARIDISC (F) is moved about 1/8 inch.

5. Remove bracket (C).
6. Carefully mark the axial and radial position of stationary VARIDISC (G) in relation to shaft **BEFORE** removal.
7. Loosen clamping bolts (H) and slide VARIDISC (G) off shaft. Wedge open the split hub if VARIDISC is tight on shaft.
8. Withdraw VARIBELT over motor shaft and remove through bracket (C) opening.
9. Install new VARIBELT.
10. Install VARIDISC (G) to its original premarked position.
11. Secure bolts (H) and re-attach lubrication pipe extension.
12. Replace bracket (C).
13. If your unit is "C" assembly remove the three hex head cap screws which were used to compress the spring.

13A. If your unit is "Z" assembly, back off studs (E) until VARIDISC (F) is in original position. Studs (E) must not contact VARIDISC (F). Replace locknuts (D).

14. Replace covers (A & B).

70 FRAME

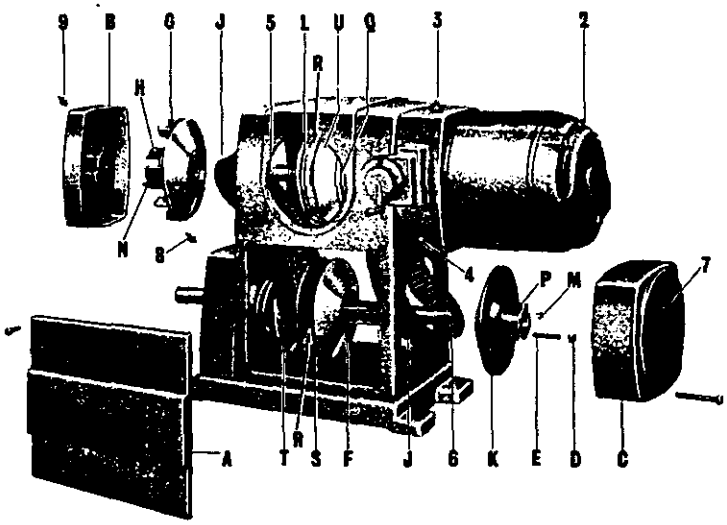

FIGURE 11

70 FRAME – REFER TO FIGURE 11

1. With VARIDRIVE running, adjust control wheel to "Low Speed" position.
2. Open power supply disconnect and lock open.
3. Remove plate covers (A) and support brackets (B & C).
4. Remove locknuts (D) from studs (E) and advance studs until spring loaded VARIDISC (F) is moved about 1/8 inch.
5. Mark the axial and radial positions of stationary VARIDISCS (G & K) in relation to shaft **BEFORE** removal.
6. Remove hex nuts (M & N) from VARIDISCS (G & K).
7. Loosen clamping bolts (H & P) and slide VARIDISCS (G & K) off shafts. Wedge open the split hubs if VARIDISCS are tight on shaft.
   CAUTION: Keep shims and shim plate with VARIDISCS to avoid misplacement or damage.

8. Pass upper loops of VARIBELTS (J) over end of motor shaft and lower loops under end of variable shaft. The VARIBELTS can now be withdrawn through the support bracket openings.

9. Having removed support brackets (B & C) and VARIDISCS (G & K) as described above, insert new VARIBELTS (J) through openings in frame case; position lower loop of one belt between VARIDISCS (S & T) and upper loop of other belt between VARIDISCS (U & Q) and position against VARIDISCS (F & L).

10. Install VARIDISCS (G & K) to their original premarked positions. Secure clamping bolts (H & P).
CAUTION: Be sure all shims are replaced with VARIDISCS.

11. Install hex nuts (M & N) on spacer studs which protrude through VARIDISCS (G & K).

12. Back off studs (E) until VARIDISC (F) is in original position. Studs (E) must not be in contact with VARIDISC (F). Replace locknuts (D).

13. Replace support brackets (B & C) and plate covers (A).

83 & 84 FRAME

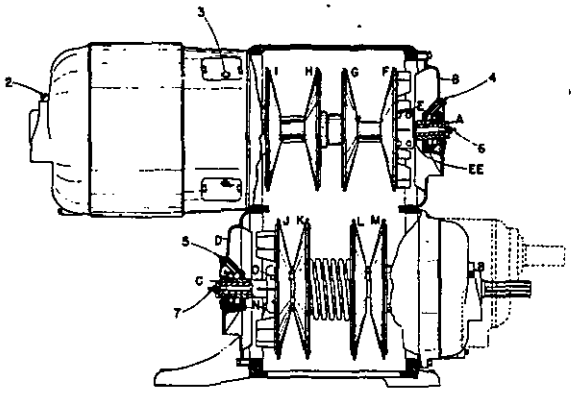

FIGURE 12

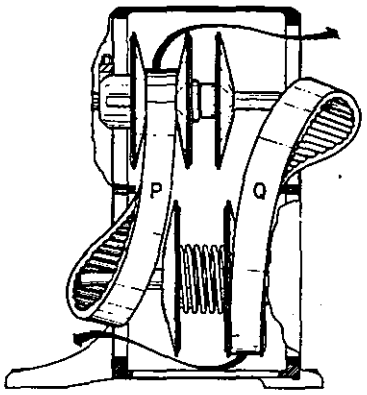

FIGURE 13

83 & 84 FRAME – REFER TO FIGURE 12 and 13

1. With VARIDRIVE running, adjust control wheel to high speed position. Stop VARIDRIVE. Open power supply disconnect and lock open. Turn control wheel to low speed position thus loosening belts.

2. Remove louvered plate cover from side of VARIDRIVE.

3. Remove support brackets (B & D) from case. Bearings in support brackets remain sealed.

4. Remove tie bolts (EE) and VARIDISC (F).

5. Loosen clamping bolts (E) on VARIDISC (F) and remove from shaft. The split hub may be wedged apart if VARIDISC is tight on shaft.
   CAUTION: Keep shims and shim plate with VARIDISC to avoid misplacement or damage.

6. Remove tie bolts (N) from VARIDISC (J) and loosen clamp bolts (O). Remove VARIDISC (J) together with shims, shim plate and spacer tubes.

7. Draw loop of VARIBELT (P) over end of variable shaft and VARIBELT (Q) over end of motor shaft. Refer to Figure 13.

8. Replacement of belts will be facilitated by wedging VARIDISCS (L & M) apart with a block of wood or other non-metallic material before removing VARIBELT (Q).

Cont'd

9. VARIBELTS may be withdrawn from case through openings for support bracket.

10. With support brackets (B & D) and VARIDISCS (F & J) removed as described above, insert VARIBELT (P) through opening in case and place between VARIDISCS (H & I) only.

11. Likewise insert VARIBELT (Q) through opening in case and place between VARIDISCS (L & M). If these VARIDISCS are not blocked apart it will be necessary either to pry them apart until belt can be inserted or to screw tie bolts (N) into tapped holes in VARIDISC (L) to force VARIDISCS (L & M) apart. These bolts must be removed after VARIBELT is in place to permit replacing VARIDISC (J).

12. Loop VARIBELT (P) over end of variable shaft and VARIBELT (Q) over end of motor shaft. See Figure 13.

13. Replace VARIDISC (J) using tie bolts (N) to bring VARIDISC against spacers. Tighten clamp bolts (O).

14. Replace VARIDISC (F) bringing into contact with spacer rod. Tighten clamping clamp bolts (E) securely.
    CAUTION: Be sure all shims are replaced with VARIDISCS.

INSTALLATION INSTRUCTIONS
Type ERSI Frames 6-84

1. Assemble adapter plug (A) and gear (B) to VARIDRIVE shaft, using screw (C) & washer (D).
2. Attach housing (E) to support bracket with (2) screws (F).
3. Thread speed pick-up (G) into housing (E) and adjust so that end of pick-up is within .010" minimum to .040" maximum of O.D. of gear teeth during complete revolution and then tighten palnut (H).
4. Attach cover (I) with (2) screws (J).
5. Remove Tachometer from Tachometer case, remove jumper clip from circuit board mounting studs, connect magnetic pulser speed pick-up leads and 115 volt A.C. power supply per connection diagram.
6. Adjust zero speed if necessary on tachometer on front of tachometer indicator.
7. With VARIDRIVE running at maximum speed adjust "full scale adjustment screw" on back of Tachometer so that meter reads 100%. A reading of 100% may be obtained for speed between 1750 and 4500 RPM via the adjustment screw.
8. Replace Tachometer in Tachometer case.
9. If pick-up cable other than cable supplied by USEM is used, cable other than shielded is not recommended.

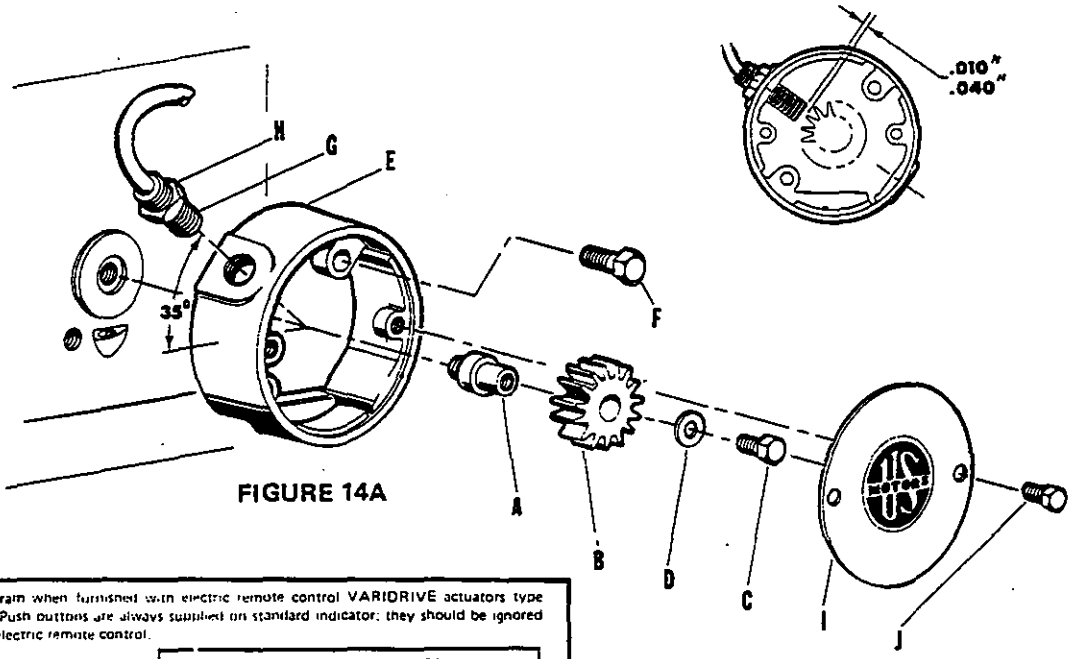

FIGURE 14A

Connection Diagram when furnished with electric remote control VARIDRIVE actuators type ERR and ERM. Push buttons are always supplied on standard indicator; they should be ignored if not used with electric remote control.

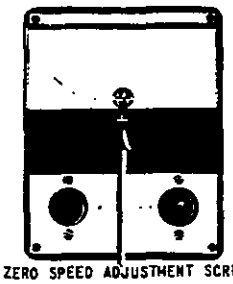

ZERO SPEED ADJUSTMENT SCREW

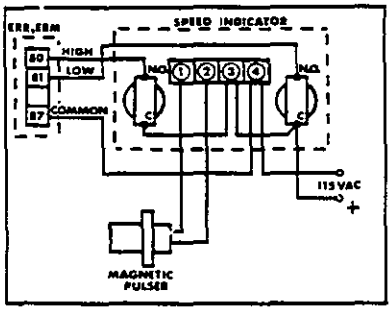

Connection diagram for type ERSI Spd. Indicator only.

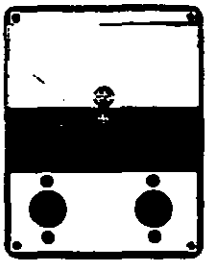

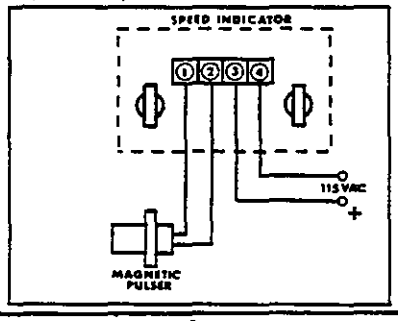

FIGURE 14B

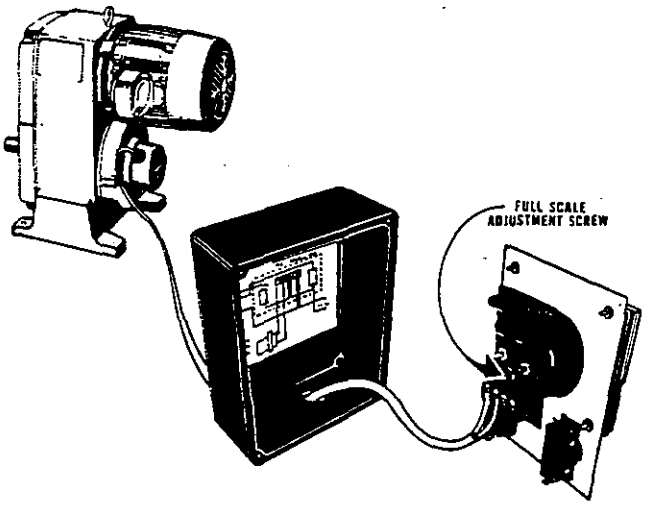

MOUNTING DIMENSIONS

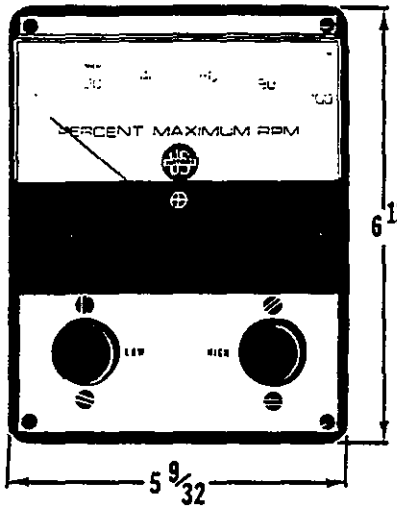

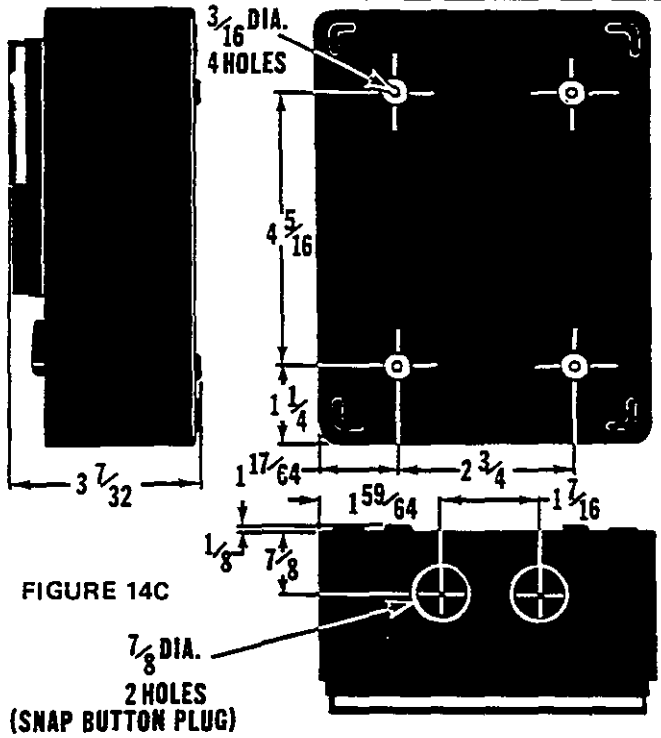

FIGURE 14C

MOUNTING DIMENSIONS SPEED INDICATOR WITHOUT ENCLOSURE
(FOR PANEL MOUNTING)

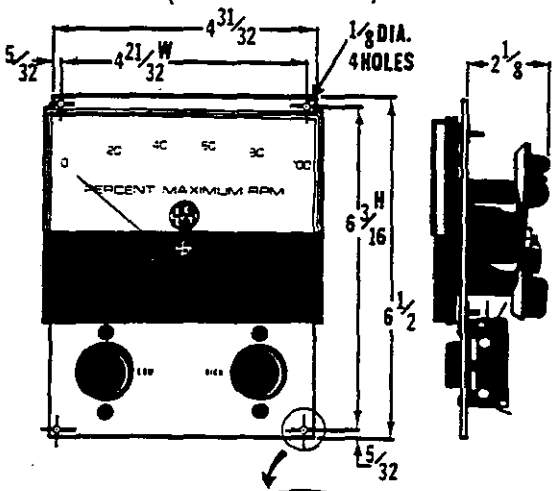

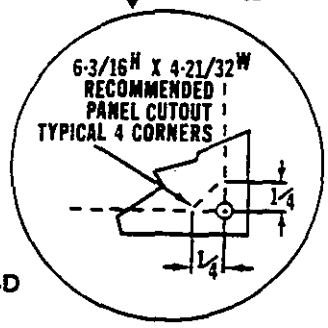

FIGURE 14D

In some cases the Tachometer Generator cannot be mounted with the motor conduit box in a position adjacent to the generator assembly. Refer to Company for accurate information regarding interference in this mounting position.

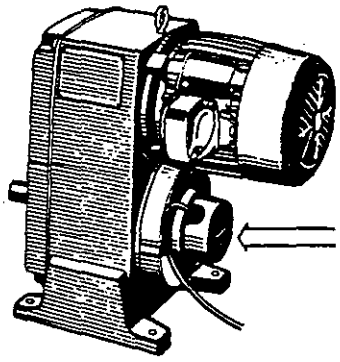

Ten feet of two conductor cable is included with speed pickup.

Speed Pickup housing mounted on VARIDRIVE extends approximately 1-5/8" from face of VARIDRIVE support bracket and is approximately 3-3/4" in diameter. Refer to Company for dimensions not shown above.

INSTALLATION AND WIRING

SEPARATE SINGLE PHASE POWER SUPPLY FOR TYPE ERR & ERRL USED ON FRAMES 6, 10, 15 and 25 VARIDRIVES

1. For units requiring operation from separate power supply, connect one line (white) of 115 VAC supply to terminal 87 as shown in Figure 15.

2. Connect line 2 (black) through relay to common side of high and low push button as shown in Fig. 15, and connect N.O. side of push buttons to terminals 80 and 81.

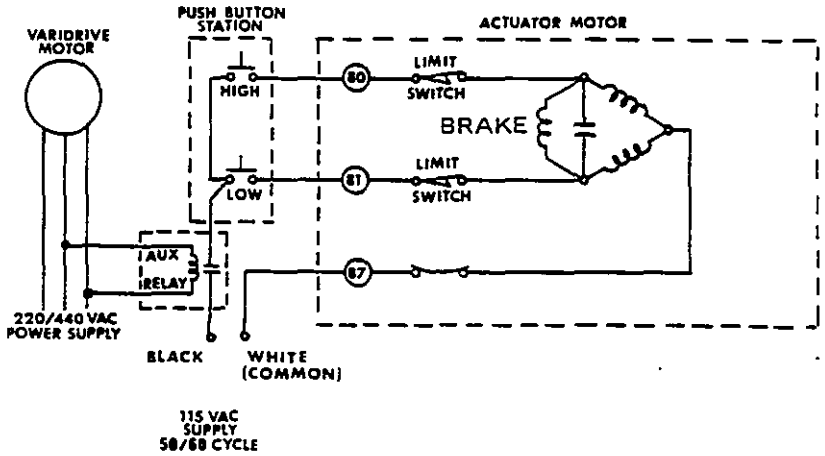

FIGURE 15

FOR POWER SUPPLY FROM VARIDRIVE MOTOR FOR TYPE ERR & ERRL USED ON FRAME SIZES 6, 10, 15 and 25

1. Three phase (230/460 VAC, 190/380 VAC) 50/60 cycle connect L_1 to motor lead terminal #1 and L_2 to motor lead terminal #4 as shown in Figure 16.
2. Single phase (115/230 VAC) 50/60 cycle connect L_1 to blue motor lead and L_2 to white motor lead as shown in Figure 16.

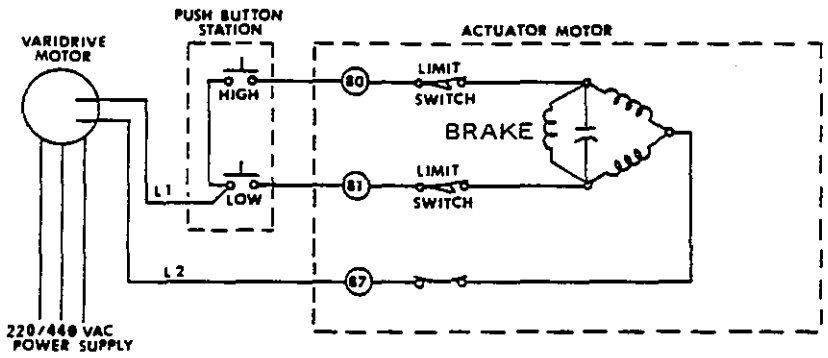

FIGURE 16

POWER SUPPLY FOR TYPE ERM USED ON FRAMES 23, 44 & LARGER

TYPE ERM EXTERNAL CONNECTION DIAGRAM

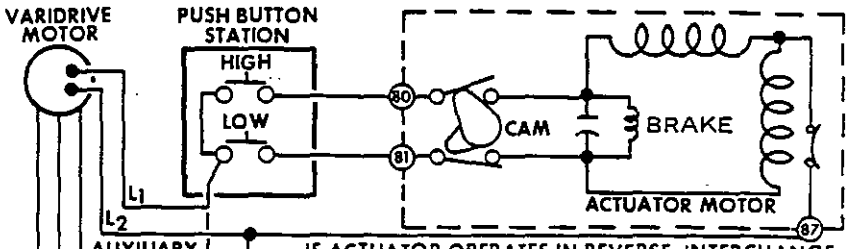

IF ACTUATOR OPERATES IN REVERSE, INTERCHANGE CONNECTIONS TO TERMINALS 80 AND 81.

VARIDRIVE FRAME	MOTOR VOLTAGE	NUMBER OF MOTOR LEADS	ACTUATOR POWER SUPPLY	RELAY COIL CONNECTION	RELAY COIL VOLTAGE
ALL	200 (208)	3 OR 6	115 VAC POWER SUPPLY	① & ②	200
	460				460
	575				575
23. 44 55	230/460. 60 HZ	9	① & ④	NONE	NONE
65. 70. 83. 84	190/380. 50 HZ	9	115 VAC POWER SUPPLY	⑦ & ⑧	230V 60 HZ

◯ INDICATES VARIDRIVE MOTOR LEAD NUMBER

151323

FIGURE 17

If your drive is equipped with U.S. PNEUMATIC VARITROL refer to Figure 19 or 20. The VARITROL has been preset at the factory, however, minor adjustments may be required.

All fittings are normally 1/4" NPT, and piping used should be 1/4" I.D. **EXCEPT** for piping between the supply air filter and the cushion air pressure regulator. This should be 3/8" tubing. Copper tubing is recommended for both the signal air input and supply air inputs to the actuator.

Supply air must be furnished and maintained within 60 to 150 PSI. Always be sure that the air supply is clean.

INSTALLATION

1. The supply air filter regulator and gauge must be installed by the customer.

2. After piping and tubing is installed check system for any air leakage. All joints must be tight.

3. The solenoid valve is normally supplied with a 230 VAC (also good for 220V) coil and should be connected to motor leads #7 and #8, so that its operation is sequenced from the VARIDRIVE motor. The solenoid must energize or de-energize at the same time as power to the VARIDRIVE motor is turned on or off.

4. If the load on the VARIDRIVE would cause it to stop in less than 5 seconds install a time delay relay per Figure 21. This will let the drive continue to run until it has returned to low speed. The time delay will then shut the drive off.
   CAUTION: The drive must be allowed to return to low speed before it comes to a stop whenever a PNEUMATIC VARITROL is used. If emergency stopping is required, the drive must be jogged before starting until all slack in the VARIBELT is taken up.

5. Supply air should be set according to Figure 22. The gauge is on the supply air filter regulator. The adjustment is on the top of the supply air filter regulator.

6. Cushion air should be set according to Figure 22. The gauge is on the bottom of the actuator. The adjustment is on the cushion air regulator.

7. Signal air should normally be 3 to 15 PSI to control the speed of the drive over its entire range. Speed increases with signal increase.

8. See Figure 18 for trouble shooting guide.

OPERATION OF THE PNEUMATIC ACTUATOR ASSEMBLY

The following description is only to inform the reader of operating principles of the PNEUMATIC ACTUATOR ASSEMBLY. Should service or disassembly of the ACTUATOR become necessary consult your local U.S. ELECTRICAL MOTORS representative or distributor.

The PNEUMATIC ACTUATOR ASSEMBLY functions as follows:

The power air, which does the work, enters the piston chamber at the port marked (A). The signal air, which controls the power air, enters the diaphragm chamber at the port marked (B). As the signal air pressure increases, it causes the valve (C) to rise; this causes more power air to enter the top of the piston chamber, forcing the piston down. As the signal air decreases, the valve (C) closes and the port (D) opens, allowing the air in the top of the piston chamber to be exhausted through the ports (E). This allows the piston to rise, due to the cushion air pressure in chamber (F). The range spring (G) provides the counter balancing force necessary to cause the piston to assume a position proportional to the signal air pressure and is independent of the force required to hold this position.

The compensating spring (H) adjusts the relationship between signal pressure and VARIDRIVE speed, i.e.; piston position. This spring can be adjusted by means of the zero adjusting screw (J). Turning this screw in (clockwise), reduces the speed. Turning it out (counter-clockwise), raises the speed.

TROUBLE SHOOTING

FIGURE 18

TROUBLE	CAUSE	REMEDY
SPEED WILL NOT CHANGE OR CHANGES TOO SLOWLY	Clogged Air system	a. Check for proper value of supply and cushion air. b. Clean valve orifice by removing valve under protective cap on PNEUMATIC ACTUATOR with air pressure off, and blowing out orifice by turning air on.
	Solenoid Valve inoperative	a. Check for voltage at coil. b. Check electrical connection. c. Remove valve from line to check operation of system.
	Leak in air system	a. Check all air connections and tighten as necessary. b. Make sure all screws on the PNEUMATIC ACTUATOR ASSEMBLY except the zeroing screw under the protective cap are tight.
	Excessive friction in mechanical linkage	a. Check VARIDRIVE for bound or sticking varidiscs. b. Check and lubricate internal speed changing linkage.
HUNTING (SPEED OSCILLATION)	Instrument Signal	Experience has shown that in cases where hunting is experienced, the causes generally are in the instruments rather than the PNEUMATIC ACTUATOR. Refer to the INSTRUMENT INSTRUCTION BOOKS for adjustment or correction.

PNEUMATIC ACTUATOR WITH CUSHION AIR REGULATOR
15 thru 55 CASE

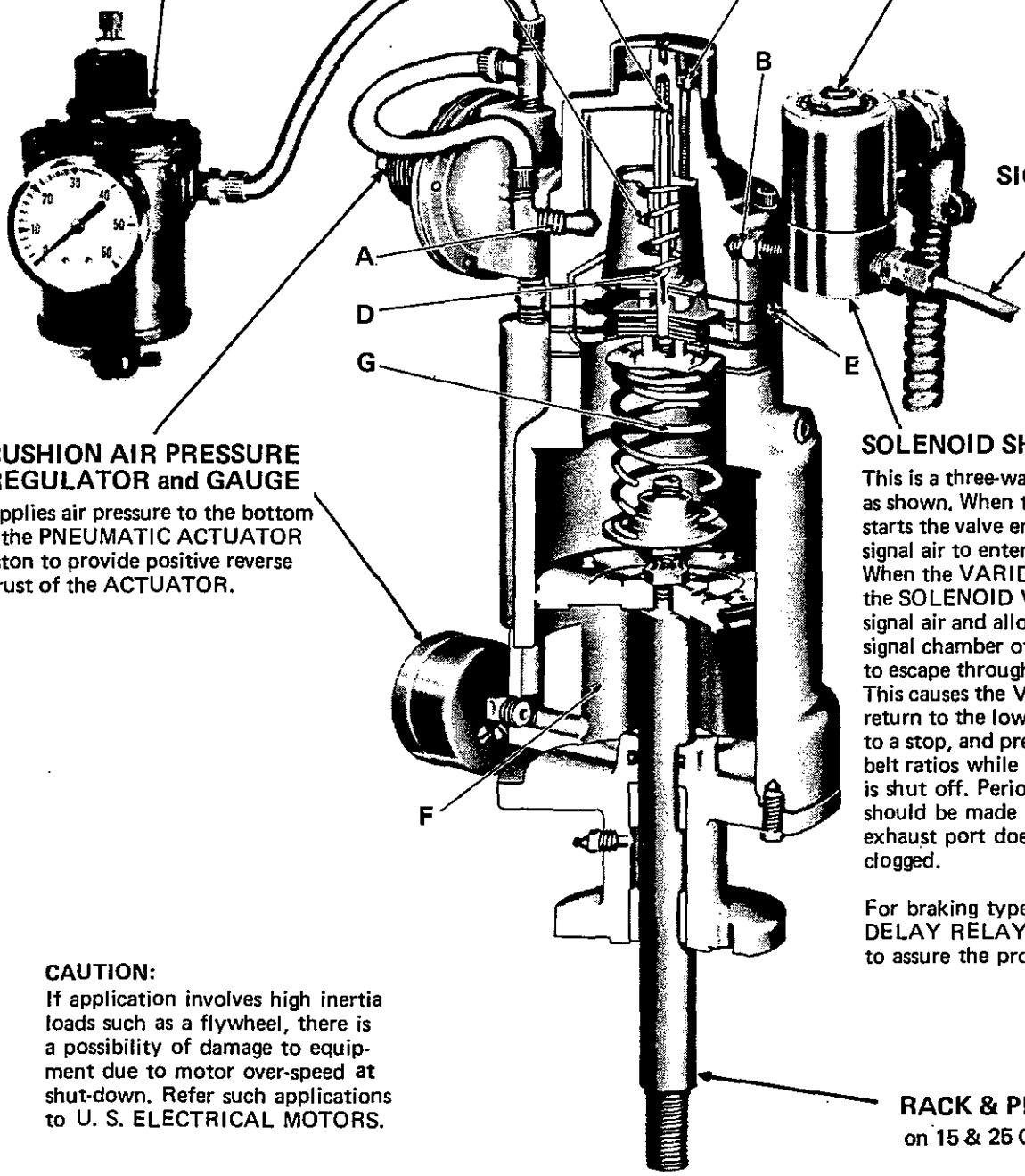

SUPPLY AIR FILTER REGULATOR and GAUGE
Used to assure the PNEUMATIC ACTUATOR a source of clean air regulated to the proper pressure.

EXHAUST PORT

SIGNAL AIR

CUSHION AIR PRESSURE REGULATOR and GAUGE
Supplies air pressure to the bottom of the PNEUMATIC ACTUATOR piston to provide positive reverse thrust of the ACTUATOR.

SOLENOID SHUT-OFF VALVE
This is a three-way valve connected as shown. When the VARIDRIVE starts the valve energizes to allow signal air to enter the ACTUATOR. When the VARIDRIVE is stopped, the SOLENOID VALVE closes to signal air and allows the air in the signal chamber of the ACTUATOR to escape through the exhaust port. This causes the VARIDRIVE to return to the low speed as it coasts to a stop, and prevents changing belt ratios while the VARIDRIVE is shut off. Periodic inspection should be made to assure that the exhaust port does not become clogged.

For braking type loads, a TIME DELAY RELAY may be required to assure the proper solenoid action.

CAUTION:
If application involves high inertia loads such as a flywheel, there is a possibility of damage to equipment due to motor over-speed at shut-down. Refer such applications to U. S. ELECTRICAL MOTORS.

RACK & PINION DRIVE
on 15 & 25 Case

FIGURE 19

PNEUMATIC ACTUATOR

REVERSING RELAY OPERATION

The reversing relay is used in place of the usual cushion air pressure regulator. This relay is used to provide faster action and stabilized positioning on the larger sized actuators.

The relay requires three connections as follows:

1. A 60 PSI input supply.
2. A 3-15 PSI signal air connection.
3. An output connection to the cushion air port of the pneumatic actuator.

The reversing relay has a loading pressure adjustment located at the top of the unit. This adjustment is used to control the speed at which the actuator will change the speed of the VARIDRIVE.

65, 70, 84 CASE VARIDRIVE PNEUMATIC ACTUATOR WITH REVERSING RELAY CONNECTIONS

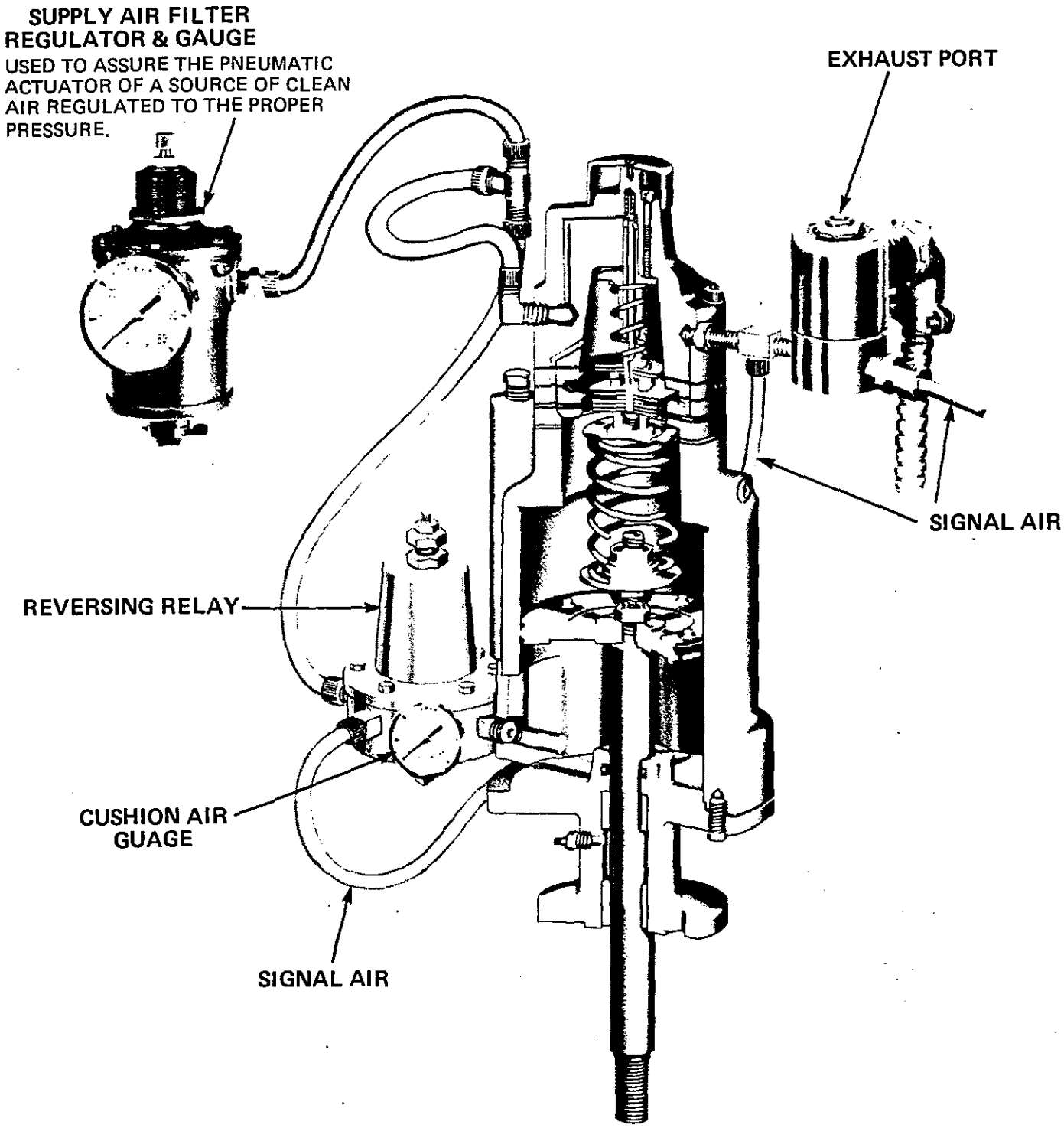

FIGURE 20

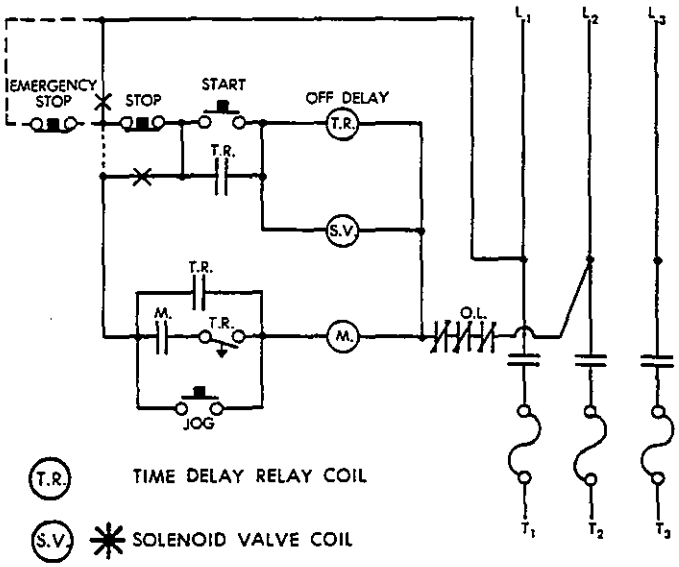

T.R. TIME DELAY RELAY COIL

S.V. ✱ SOLENOID VALVE COIL

M. MOTOR STARTER COIL

T.R. INSTANTANEOUS AUXILIARY CONTACTS, TIME DELAY RELAY

T.R. CONTACT TIMED TO OPEN, TIME DELAY RELAY

M. MOTOR HOLDING CONTACT

O.L. OVERLOAD CONTACTS

✱ Remove these connections when using emergency stop and jog.

✱ The solenoid valve must have the same voltage rating as the control voltage.

FIGURE 21

AIR PRESSURE SETTINGS

VARIDRIVE FRAME	CUSHION PRESSURE APPROXIMATE SETTINGS	SUPPLY PRESSURE APPROXIMATE SETTINGS
15	6–12 PSI	40 PSI
23	6–12 PSI	40 PSI
25	6–12 PSI	40 PSI
44	12–20 PSI	60 PSI
55	16–20 PSI	60 PSI
65	30 PSI	60 PSI
70	30 PSI	60 PSI
84	30 PSI	60 PSI

FIGURE 22

6, 10 CASE VARIDRIVE—SLEEVE COUPLING REMOTE CONTROL.

Installation Instructions

When remote controls are furnished with the VARIDRIVE, the adaptor bracket is mounted on the VARIDRIVE frame at the factory. Customer mounts only the control knob assembly on his support and connects the control rod using the procedure below.

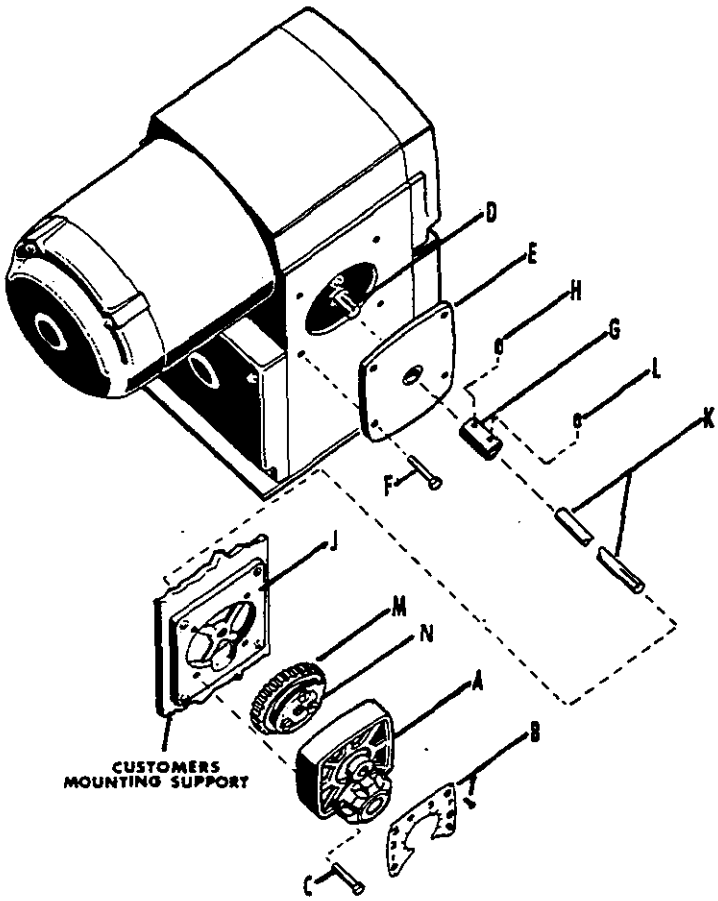

FIGURE 24

When remote controls are furnished separately, the customer must mount the adaptor bracket on the VARIDRIVE frame, using the procedure below:

1. Remove the control knob assembly from the VARIDRIVE as follows:
   Remove dial plate covering screws which secure the control knob assembly to the VARIDRIVE. Remove all control knob parts except cam shaft "D" and adapter plate assembly (10 case only, not shown). Note position of speed stop ring "N" in relation to cam shaft. It must be assembled to control rod "K" in the same position.

2. Install adaptor bracket "E" on VARIDRIVE using (4) screws "F". (thru adaptor plate assembly on 10 case).

3. Install sleeve coupling "G" on cam shaft "D" and tighten set screw "H".

4. Using control knob adaptor "J" as a template, drill a 9/16" hole for control rod "K" and (4) mounting holes into the mounting support. Attach control knob adaptor "J" to the mounting support.

5. Pass control rod "K" thru the adaptor and mounting support and into the sleeve coupling. Tighten set screw "L".

6. Place gear "M" on control rod "K" observing original position of speed stop ring "N".

7. Assemble control knob assembly "A" to adapter using (4) screws "C". Replace dial plate "B".

6, 10 CASE VARIDRIVE – FLEXIBLE SHAFT REMOTE CONTROL

Installation Instructions

When remote control is furnished with the VARIDRIVE, the gear box is mounted on the VARIDRIVE at the factory. Customer mounts only the control hand wheel on his support and connects flexible shaft by setting pointer to zero and inserting the driven end of the flexible shaft "K" into gear box "C" and tightening coupling. **CAUTION:** The speeds of this unit have been calibrated for this control.

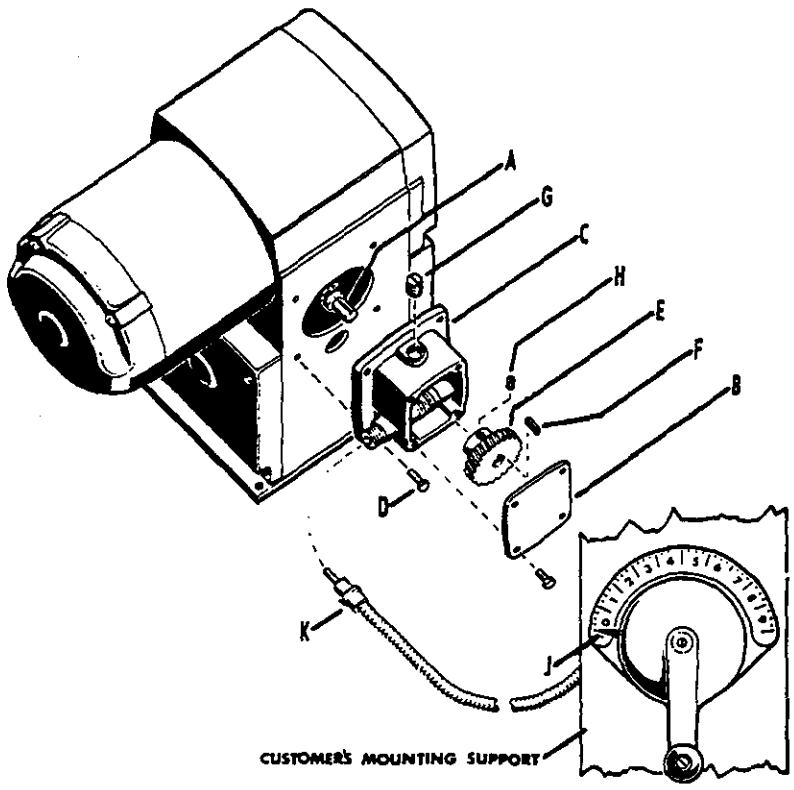

FIGURE 23

When remote control is furnished separately from VARIDRIVE, the customer mounts the gear box on the VARIDRIVE frame, using procedure below:

1. Start the VARIDRIVE and run to low speed using standard control knob. Stop the VARIDRIVE.

2. Remove control knob assembly from the VARIDRIVE as follows:
   Remove dial plate covering the screws which secure the control knob assembly to the VARIDRIVE; remove all control knob parts except cam shaft "A" and adaptor plate assembly (10 case only – not shown).

3. Remove cover "B" from gear box "C".

4. Mount gear box "C" to VARIDRIVE (thru adaptor plate assembly on 10 case). Before tightening the four (4) screws "D", insure there is no binding of cam shaft against gear box.

5. Install gear "E" on the cam shaft, using square key "F".

6. Remove plug "G" from gear box and tighten set screw "H" through plug hole. Replace plug.

7. Coat gears and partially fill housing with a good grade bearing grease.

8. Replace cover "B".

9. Set pointer "J" on new control at zero and insert driven end of flexible shaft "K" into gear box "C" and tighten coupling.

Caution: The flexible shaft should not be bent in a radius of less than 5 inches or beyond 180 degrees and should be secured in at least two places to prevent twisting.

6, 10 CASE VARIDRIVE – RIGHT ANGLE REMOTE CONTROL

Installation Instructions

When right angle remote control is furnished with the VARIDRIVE, the gear box is mounted on the VARIDRIVE frame at the factory. The customer mounts only the control knob assembly and connects the control rod using the procedure below, omitting Step 1 through 4.

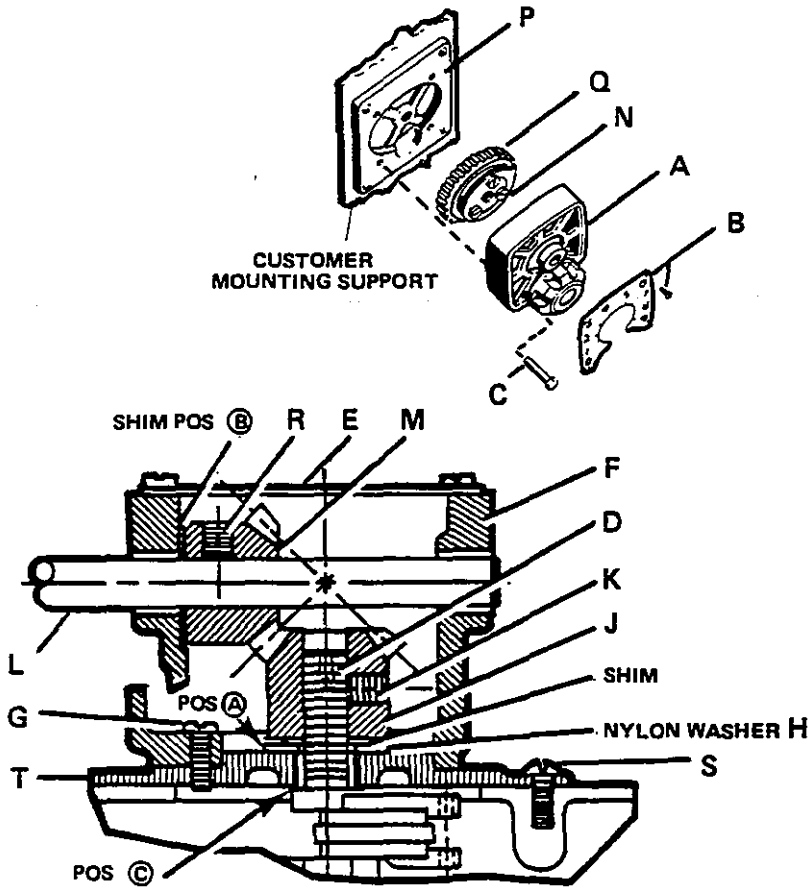

FIGURE 25

When remote controls are furnished separately, the customer must mount the gear box on the VARIDRIVE frame, using the procedure below:

1. Remove the control knob assembly from the VARIDRIVE as follows:
   Remove dial plate covering screws which secure the control knob assembly to the VARIDRIVE. Remove all control knob parts except cam shaft "D" and adaptor plate assembly (10 case only – not shown). Note position of speed stop ring "N" in relation to cam shaft. It must be assembled to control rod "L" in the same position.

2. Mount adaptor bracket assembly "T" to VARIDRIVE (thru adaptor plate assembly on 10 case). Before tightening the (4) screws "S", insure there is no binding of cam shaft against gear box.

3. Remove cover "E" from gear box "F" and mount gear box to adaptor bracket with screws "G".

4. Install nylon washer "H" and gear "J" on control shaft. Do not tighten set screw "K".

5. Pass control rod "L" into gear box, through gear "M" and into bearing on opposite side of box.

6. Adjust driven gear "J" to obtain proper mesh and tighten set screw "K". Shims may be used at position Ⓐ .

7. Shim at position Ⓑ to limit control rod end play from .002 to .005. Secure gear "M" to control rod by tightening set screw "R".

6, 10 CASE VARIDRIVE – RIGHT ANGLE REMOTE CONTROL (Cont'd)

8. Coat gears and partially fill housing with a good grade bearing grease.

9. Using knob control adaptor "P" as a template, drill a 9/16" hole for control rod "L" and (4) mounting holes into the mounting support. Attach control knob adaptor "P" to the mounting support.

10. Pass control rod "L" thru the adaptor "P" and mounting support.

11. Place gear "Q" on control rod "L" observing original position of speed stop ring "N".

12. Assemble control knob assembly "A" to adaptor (P) using (4) screws "C". Replace dial plate "B".

15 & 25 CASE VARIDRIVE
UNIVERSAL JOINT, SLEEVE COUPLING AND CHAIN & SPROCKET REMOTE CONTROL

Installation Instructions

When remote control is furnished separately, it should be assembled per the instructions below. When funished with the VARIDRIVE, omit Steps 1 through 3. See figure 26 and 27.

1. Remove screw "A" and handwheel "B" from VARIDRIVE handwheel assembly.
2. Remove (2) pins "C", (2) springs "D", locking cam "E" and square key "F".
3. Attach dust cover "G" to control housing using (2) pan head screws.
4. Place square key in keyway of control shaft "H" and slide either sleeve coupling, universal joint or sprocket onto control shaft. Tighten set screw.

Universal Joint and Sleeve Coupling Only —

5. Insert control rod "J" into open end of Universal joint or sleeve coupling and tighten set screw.

Chain and Sprocket Only —

6. Mount pillow block "K" within two inches of chain centerline after determining correct center distance.
7. Pass control rod through pillow block, "K" slide sprocket "L" onto control rod "J" and tighten set screw.
8. Install chain using connecting link provided. Use care not to overtension chain.

All remote Controls —

9. Using the remote control housing assembly "M" as a template, drill a 9/16" clearance hole for the control rod and (4) mounting screw holes in the mounting support.
10. Slide sleeve coupling "N" onto control rod "J" and tighten set screw.

15 & 25 CASE VARIDRIVE
UNIVERSAL JOINT, SLEEVE COUPLING AND CHAIN & SPROCKET REMOTE CONTROL (Cont'd)

11. Place key "F" in keyway of input shaft of remote control housing assembly.

12. Place two springs "D" into holes in locking cam "E". Force pins "C" against springs and slide locking cam onto input shaft.

13. Assemble handwheel "B" to input shaft and secure with screw "A".

14. Turn handwheel to obtain same pointer indication on remote dial as is on VARIDRIVE mounted dial.

15. Insert square key in shaft "P" and pass shaft through hole in mounting support and into sleeve coupling "N".

16. Attach control housing assembly "M" to mounting support with four screws.

17. Tighten set screw in sleeve coupling "N".

18. Start VARIDRIVE and run to minimum speed. Pointer on remote dial should be at zero. If not, stop VARIDRIVE, loosen set screw in sleeve coupling "N" and turn handwheel until pointer indicates zero. Retighten coupling set screw.

19. Start VARIDRIVE and shift to maximum speed. Remove plug in side of control housing "M" and screw in speed stop screw until it bottoms. If maximum speed cannot be obtained, back speed stop screw out and advance handwheel until maximum speed is obtained.

UNIVERSAL JOINT & SLEEVE COUPLING
REMOTE CONTROL

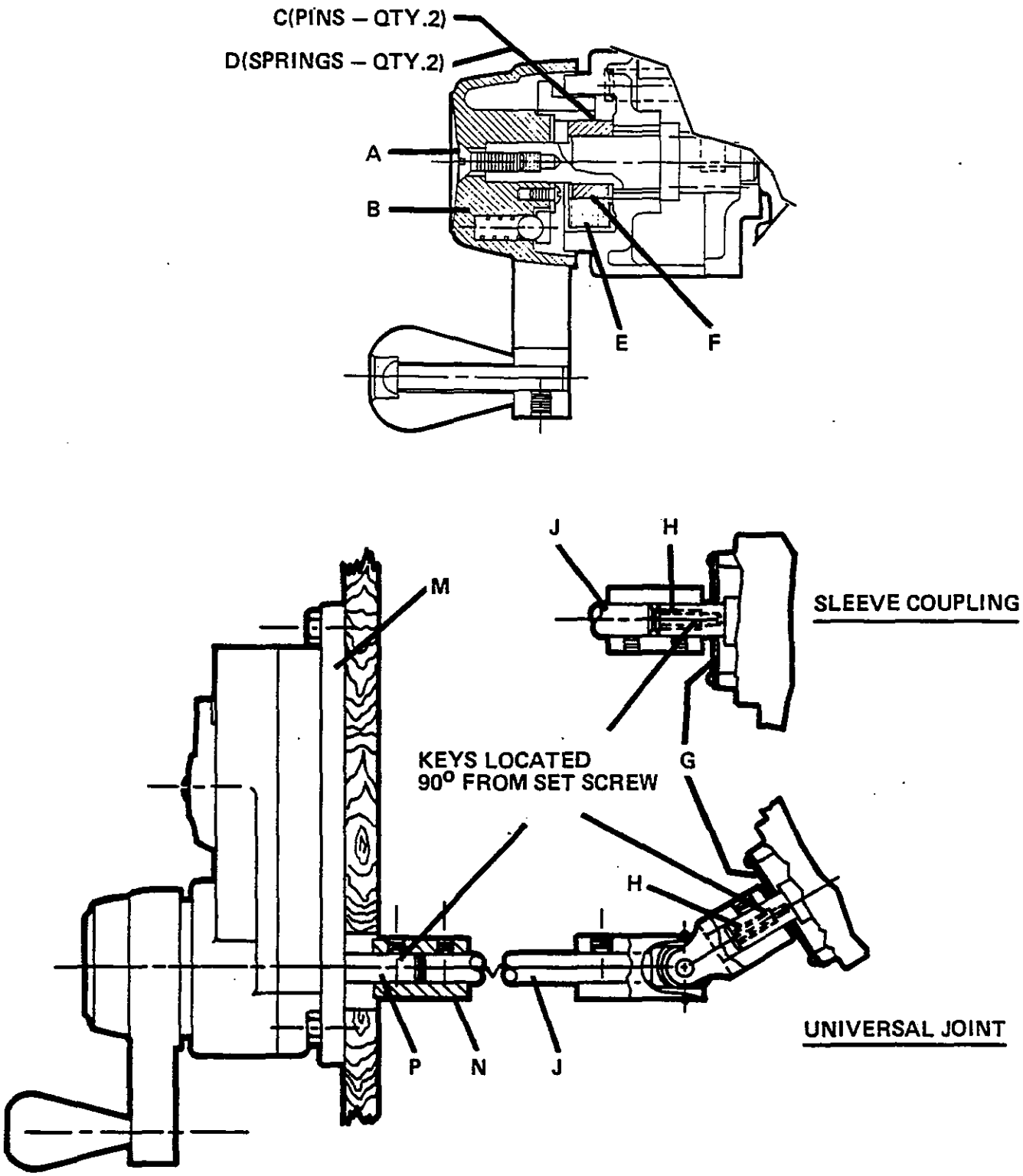

FIGURE 26

CHAIN & SPROCKET REMOTE CONTROL

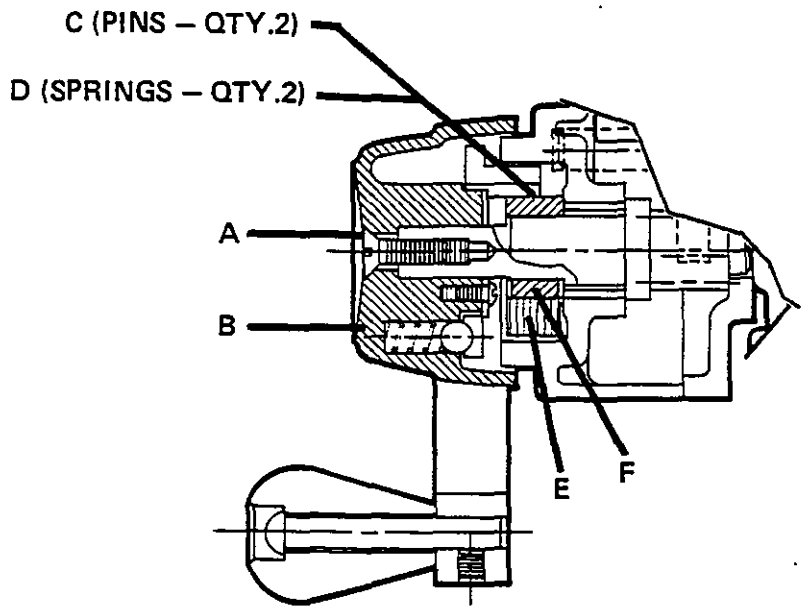

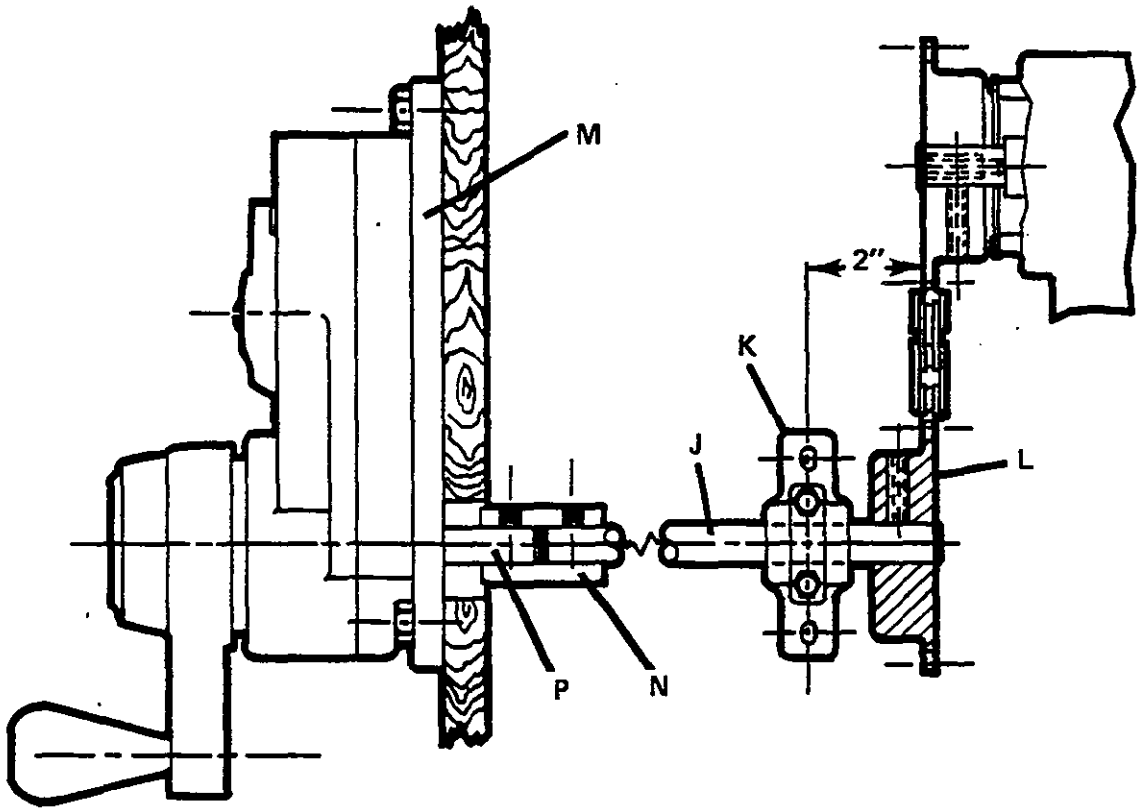

FIGURE 27

15 & 25 CASE VARIDRIVE – RIGHT ANGLE REMOTE CONTROL

Installation Instructions

When right angle remote control is furnished with the VARIDRIVE, the gear box is mounted on the VARIDRIVE frame at the factory. The customer mounts only the handwheel assembly and connects the control rod using the procedure below, omiting Steps 1 through 4. See figure 28.

When remote control is furnished separately, the customer must mount the gear box on the VARIDRIVE frame using the procedure below:

1. Remove screw "A" and handwheel "B" from VARIDRIVE handwheel assembly.
2. Remove (2) pins "C", (2) springs "D", locking cam "E" and square key "F".
3. Assemble gear housing "G" to control housing.
4. Place square key in shaft "H" and slide gear "R" onto shaft. Do not tighten set screw.
5. Pass control rod "J" into gear box, through gear "S" and into bearing on opposite side of box.
6. Adjust driven gear "R" to obtain proper mesh and tighten set screw. Shims may be used at position (A) .
7. Shim at position (B) to limit control rod end play from .002 to .005. Secure gear "S" to control rod by tightening set screw
8. Coat gears and partially fill housing with a good grade bearing grease.
9. Attach cover "T" to gear housing.
10. Using the remote control housing assembly "M" as a template, drill a 9/16" clearance hole for the control rod and (4) mounting screw holes in the mounting support.
11. Slide sleeve coupling "N" onto control rod "J" and tighten set screw.

15 & 25 CASE VARIDRIVE – RIGHT ANGLE REMOTE CONTROL (Cont'd)

12. Place key "F" in keyway of input shaft of remote control housing assembly.

13. Place two springs "D" into holes in locking cam "E". Force pins "C" against springs and slide locking cam onto input shaft.

14. Assemble handwheel "B" to input shaft and secure with screw "A".

15. Turn handwheel to obtain same pointer indication on remote dial as is onVARIDRIVE mounted dial.

16. Insert square key in shaft "P" and pass shaft through hole in mounting support and into sleeve coupling "N".

17. Attach control housing assembly "M" to mounting support with four screws.

18. Tighten set screw in sleeve coupling "N".

19. Start VARIDRIVE and run to minimum speed. Pointer on remote dial should be at zero. If not, stop VARIDRIVE, loosen set screw in sleeve coupling "N" and turn handwheel until pointer indicates zero. Retighten coupling set screw.

20. Start VARIDRIVE and shift to maximum speed. Remove plug in side of control housing "M" and screw in speed stop screw until it bottoms. If maximum speed cannot be obtained, back speed stop screw out and advance handwheel until maximum speed is obtained.

15 & 25 CASE – RIGHT ANGLE REMOTE CONTROL

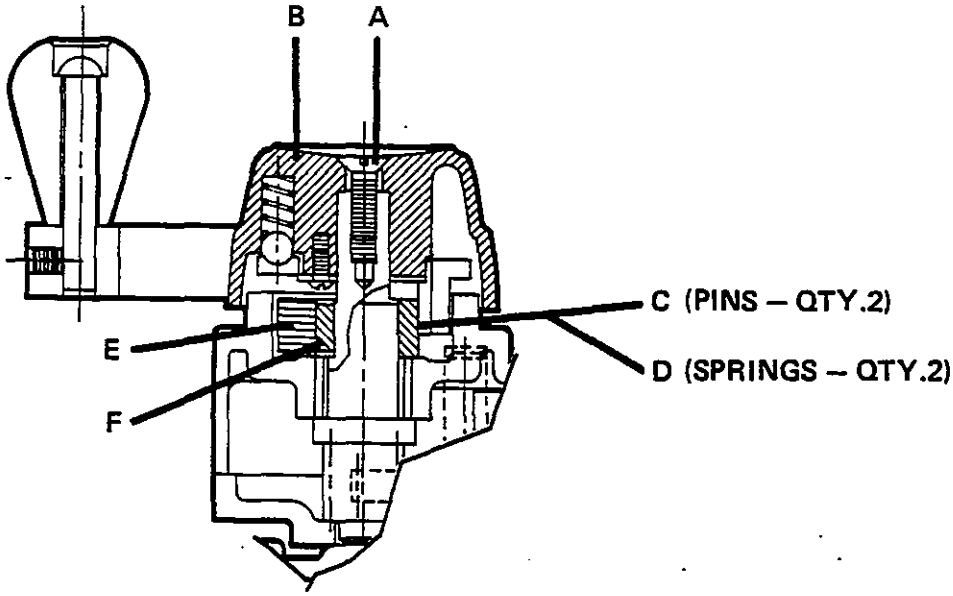

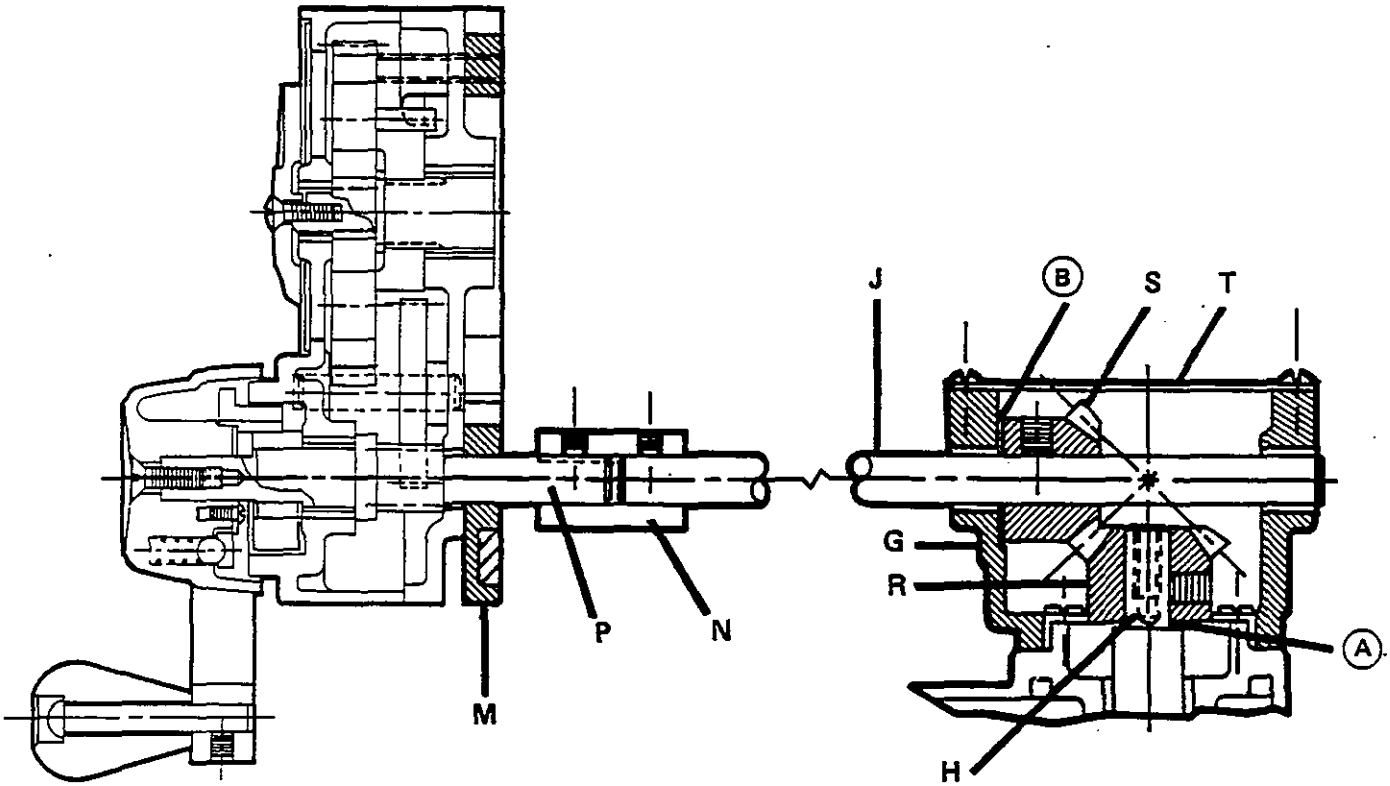

FIGURE 28

23, 44, 55, 65, 70, 84 CASE VARIDRIVES
UNIVERSAL JOINT, SLEEVE COUPLING AND CHAIN & SPROCKET REMOTE CONTROL

Installation Instructions

When remote control is furnished separately, it should be assembled per the instructions below. When furnished with the VARIDRIVE, omit Steps 1 through 5. See Figures 29 and 30.

1. Remove screw "A", handwheel "B", felt washer "C" and pointer ring gear "D".
2. Remove (4) screws "E", dial plate "F", cam housing "G", locking pins "H" and springs "J".
3. Remove lockring "K", locking cam "L" and square key "M";
4. Use lockring "K" to secure bearing "N".
5. Attach clamping plate "P" to VARIDRIVE with (4) screws.
6. Place Universal joint, sleeve coupling or sprocket on VARIDRIVE control shaft and tighten set screw.

Chain and Sprocket Remote Control Only —

7. Mount pillow block "S" within two inches of chain centerline after determining correct center distance.

All Remote Controls —

8. Using handwheel adaptor "Q" as a template, drill 7/8" clearance hole for control rod "R" and (4) holes for mounting screws. Mount the handwheel adaptor to the mounting support.
9. Install snap ring "T" and bearing "U" on control rod "R".

23, 44, 55, 65, 70, 84 CASE VARIDRIVES
UNIVERSAL JOINT, SLEEVE COUPLING AND CHAIN & SPROCKET REMOTE CONTROL (Cont'd)

Universal Joint or Sleeve Coupling Only –

10. Pass control rod "R" through handwheel adaptor and mounting support and into universal joint or sleeve coupling. Make sure bearing "U" is seated against shoulder of adaptor and tighten set screw.

Chain and Sprocket Only –

11. Pass control rod "R" through handwheel adaptor, mounting support and pillow block. Install sprocket "V" on control rod and tighten set screw.

12. Install chain using connecting link provided to join ends. Use care not to overtension chain.

All Remote Controls –

13. Place square key "M" in control rod keyway.

14. Insert locking cam "L" into cam housing "W". (NOTE: This is not same cam housing removed earlier).

15. Insert (2) springs "J" into holes in locking cam.

16. Depress springs and slide locking pins "H" into cam housing in front of springs.

17. Slide the locking cam sub-assembly onto the control rod so the square key "M" engages the locking cam keyway. Place lock ring "X" in the control rod groove in front of the locking cam.

18. Rotate the cam housing to line up the mounting holes. Place dial plate "F" over the cam housing and secure with (4) screws.

19. Temporarily slide handwheel "B" onto the control rod. Start the VARIDRIVE and run to minimum speed. Stop the VARIDRIVE and remove handwheel.

20. Install pointer ring gear "D" with pointer at zero.

21. Lubricate all gear teeth and partially fill housing with a good grade bearing grease.

22. Fit felt washer "C" into groove in handwheel, slide handwheel onto control rod and secure with screw "A".

23, 44, 55, 65, 70 CASE VARIDRIVES
UNIVERSAL JOINT, SLEEVE COUPLING and CHAIN & SPROCKET REMOTE CONTROLS

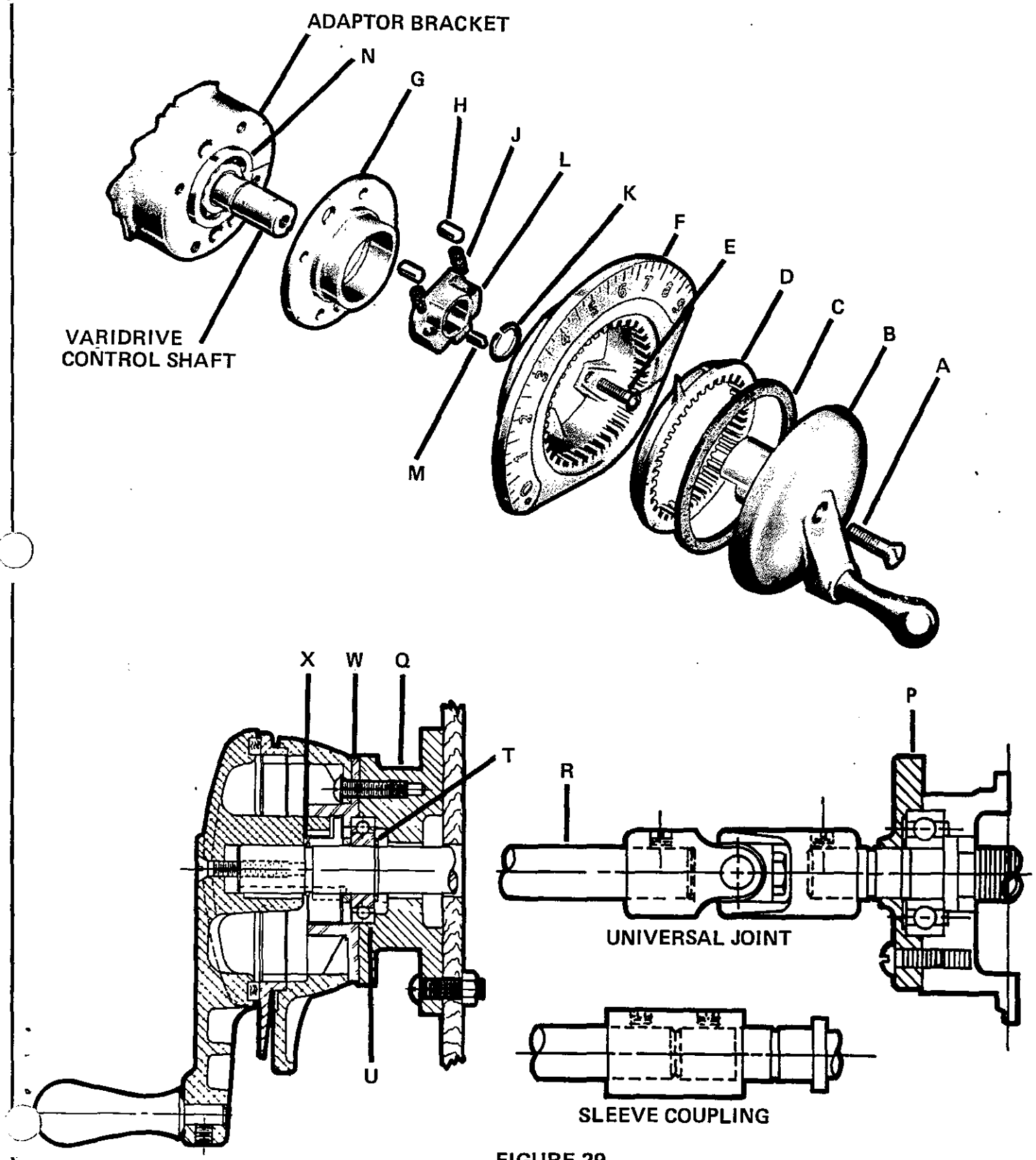

FIGURE 29

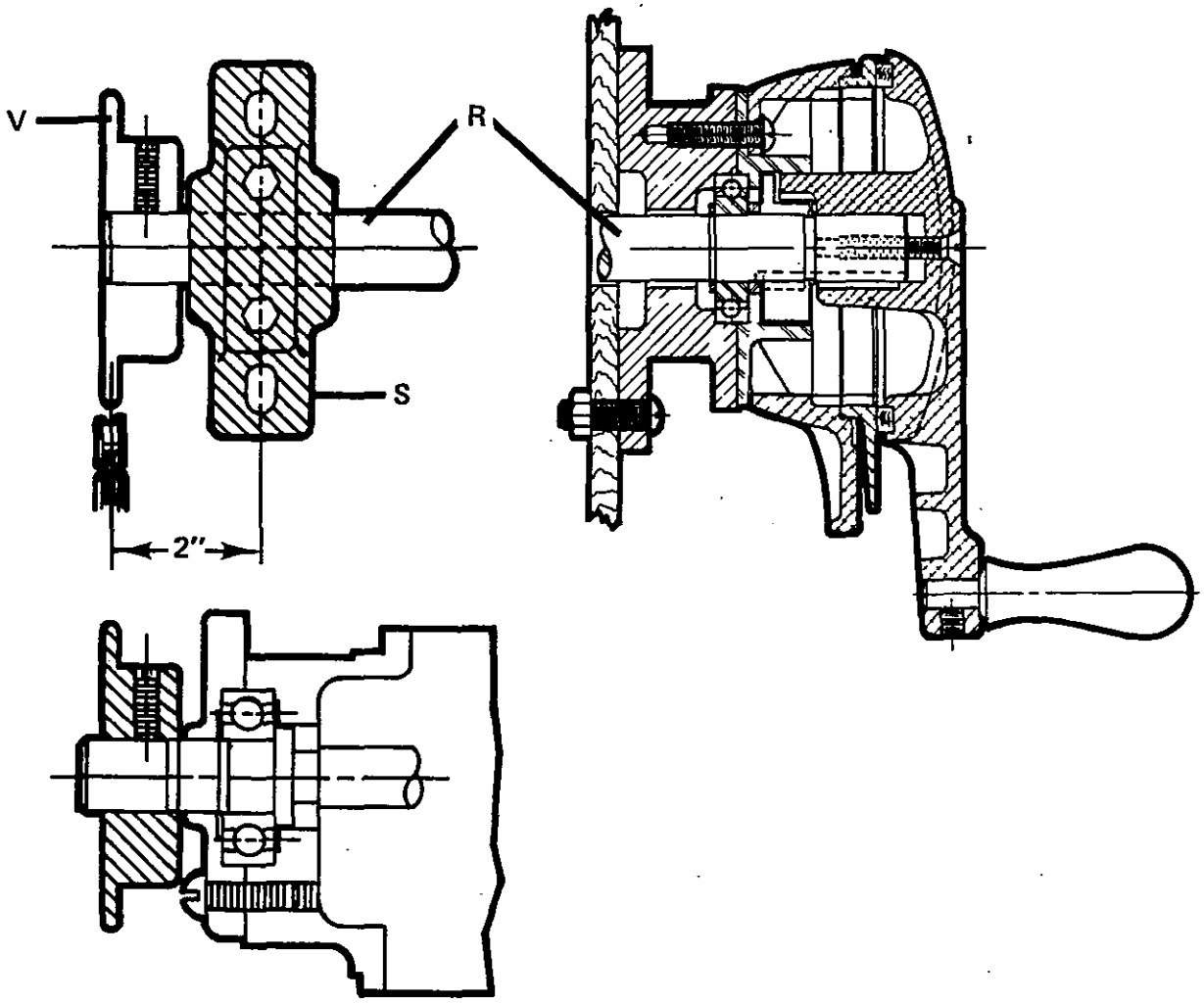

CHAIN & SPROCKET REMOTE CONTROL

FIGURE 30

23, 44, 55, 65, 70, 84 CASE VARIDRIVES – RIGHT ANGLE REMOTE CONTROL

Installation Instructions

When right angle remote control is furnished with the VARIDRIVE, the gear box is mounted on the VARIDRIVE frame at the factory. The customer mounts only the handwheel assembly and connects the control rod using the procedure below, omitting Steps 1 through 7. See Figure 31.

When remote control is furnished separately, the customer must mount the gear box on the VARIDRIVE frame, using the procedure below:

1. Remove screw "A", handwheel "B", felt washer "C" and pointer ring gear "D".
2. Remove (4) screws "E", dial plate "F", cam housing "G", locking pins "H" and springs "J",
3. Remove lockring "K" locking cam "L" and square key "M".
4. Using lockring "K" to secure bearing "N".
5. Assemble gear housing "P" to frame case using (4) screws.
6. Slide spacing collar "Q" onto control shaft "R".
7. Slide gear "S" onto control shaft. Do not tighten set screw.
8. Using handwheel adaptor "Z" as a template, drill 7/8" clearance hole for control rod "U" and (4) holes for mounting screws. Mount the handwheel adaptor to the mounting support.
9. Pre-lubricate bearings "T" using a recommended bearing grease.
10. Install snap ring "AA" and bearing "BB" on control rod "U".

23, 44, 55, 65, 70, 84 VARIDRIVES – RIGHT ANGLE REMOTE CONTROL (Cont'd)

11. Pass end of control rod "U" thru handwheel adaptor "Z", mounting support, clamping plate "V", first bearing "T", spacer "DD" and second bearing "T".

12. Insert control rod and bearings into gear housing and slide gear "X" onto control rod. Secure clamping plate "V" to gear housing with (4) screws. Press gear "X" against bearing and tighten set screw. Bearing "BB" must be seated in handwheel adaptor.

13. Adjust gear "S" to obtain proper gear mesh and tighten set screw. Shims may be used between gear "S" and spacing collar "Q".

14. Coat gears and partially fill housing with a good grade bearing grease.

15. Attach cover "Y" to gear housing.

16. Place square key "M" in control shaft keyway.

17. Insert locking cam "L" into cam housing "W". (NOTE: This is not same cam housing removed earlier.)

18. Insert (2) springs "J" into holes in locking cam.

19. Depress springs and slide locking pins "H" into cam housing in front of springs.

20. Slide the locking cam sub-assembly onto the control shaft so the square key "M" engages the locking cam keyway. Place lock ring "CC" in the control shaft groove in front of the locking cam.

21. Rotate the cam housing to line up the mounting holes. Place dial plate "F" over the cam housing and secure with (4) screws.

22. Temporarily slide handwheel "B" onto the control shaft. Start the VARIDRIVE and run to minimum speed. Stop the VARIDRIVE and remove handwheel.

23. Install pointer ring gear "D" with pointer at zero.

24. Lubricate all gear teeth and partially fill housing with a good grade bearing grease.

25. Fit felt washer "C" into groove in handwheel, slide handwheel onto control shaft and secure with screw "A".

23, 44, 55, 65, 70, 84 CASE VARIDRIVES
RIGHT ANGLE REMOTE CONTROL

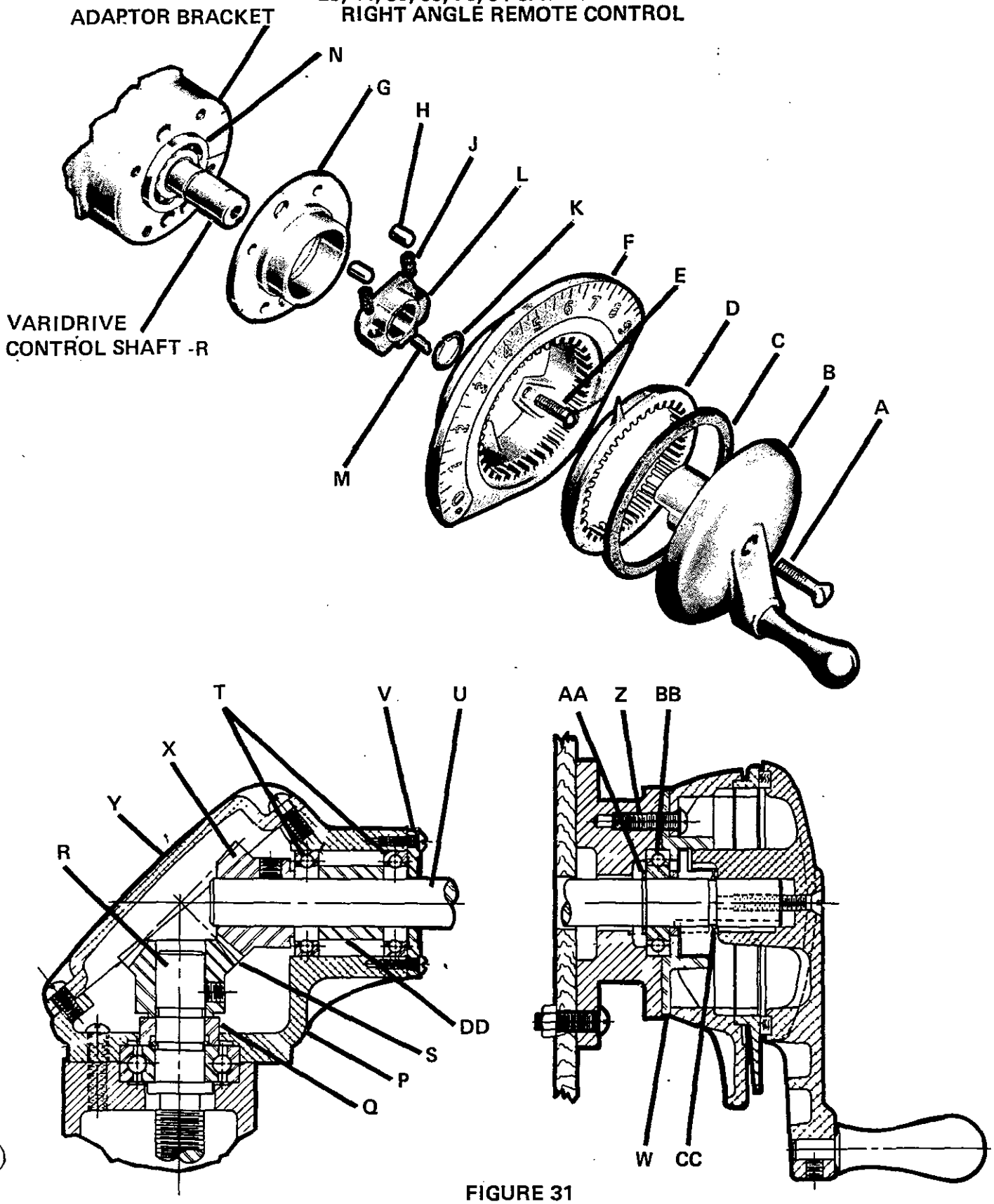

FIGURE 31

Refer to the Lubrication Instruction Plates located on the VARIDRIVE transmission and on the gear head when a geared take-off shaft is supplied.

1. Grease all points indicated periodically as recommended. Follow instructions given on the instruction plate on the VARIDRIVE frame.

2. Use the proper type and weight of oil as indicated on the plate on the gear frame case.

   A. Fill gear unit with oil before operating.

   B. Fill to proper oil level. An oil level plate may be found at one of the pipe plug locations on the gear frame. If no plate is evident follow instruction sheet or tag furnished with drive.

   C. Change oil twice a year or every 2500 hours, whichever occurs first.

3. Generally, unless otherwise indicated on the instruction plates;

   A. Regrease bearings at least once each year, more often if the application is damp, or dusty. (Sealed bearings are lubricated for life and require no further greasing — the instruction tag will show you bearing locations requiring periodic regreasing.)

   B. If unit is used more than 8 hours per day regrease bearings at least twice yearly.

   C. Grease VARIDRIVE shafts (frames 65, 70 and 84) monthly (bi-weekly if operated more than 8 hours per day). Use care to avoid overgreasing, since excess grease will throw out onto the belt and disc faces.

   D. Run the drive over its entire speed range AT LEAST ONCE EACH WEEK to maintain lubrication of the shafts.

   E. Lubricate handwheel linkage at least twice each year for minimum wear and continued smooth operation.

Careful maintenance and lubrication will keep your drive in best condition and give you optimum life along with reduced repairs and repair expense.

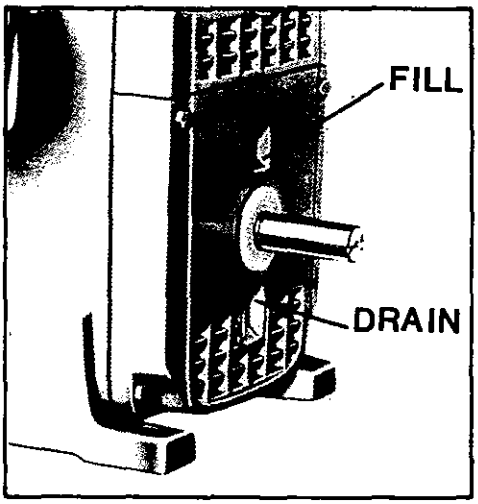

SUGGESTED REGREASING INTERVALS			
SERVICE	MOTOR HORSEPOWER 15-50	60-100	100 Up
A	1-2 Yrs	1-2 Yrs	1 Yr
B	1 Yr	1 Yr	6 Mos
C	1 Yr	6 Mos	3 Mos
D	4 Mos	3 Mos	3 Mos

SERVICE SYMBOL	TYPES OF SERVICE
A	Infrequent operation or light duty in clean atmosphere
B	8-16 Hrs/Day in clean, relatively dry atmosphere
C	12-24 Hrs/Day, heavy duty, or if moisture is present
D	Heavy duty in dirty, dusty locations; high ambients; moisture laden atmosphere; vibration

OIL CAPACITY and TYPES OF GEARING FOR U.S. SYNCROGEARS & U.S. VARIDRIVE-SYNCROGEARS

RIGHT ANGLE WORM SYNCROGEAR UNITS

FRAME SIZE	TYPES	REDUCTION	APPROXIMATE OIL QUANTITY IN U.S. QUARTS
1	GW, GWO, GWV	1	3/4
6	GW, GWO, GWV	1	1
6	GWB	2	1-1/4
10	GWB	2	2
11	GW, GWV	1	2
20	GW, GWV	1	3-1/2
11	GWB	2	2
20	GWB	2	4

PARALLEL SHAFT HELICAL GEAR SYNCROGEAR UNITS

FRAME SIZE	TYPES	REDUCTION	APPROXIMATE OIL CAPACITY IN U.S. QUARTS
5	GR	1	1/8
5	GD, GDO, GDF	2	1
10	GH, GS	1	1/8
11	GH	1	1/8
21	GD, GDO, GDF	2	4
21	GH	1	1/4
22	GH	1	1/4
30	GD, GDO, GDF	2	4-1/2
30	GDV	2	7
31	GS	1	1/4
40	GD, GDO, GDF	2	12
40	GDV	2	14
41	GH	1	3/8
41	GL, GLO, GLF	2	12
41	GS	1	1-1/4
41	GM, GMO, GMF	3	16
42	GH	1	3/8
50	GH	1	1
50	GD, GDO, GDF	2	18
50	GL, GLO, GLF	2	18
50	GM, GMO, GMF	3	24
50	GR, GS	1	2
51	GDV, GLV	2	19
60	GB	1	16
60	GR	1	6-1/2
61	GD, GDO, GDF	2	24
61	GL, GLO, GLF	2	24
61	GLV	2	44
61	GM, GMO, GMF	3	36
61	GMV	3	44
70	GD, GDO, GDF	2	56
70	GM, GMO, GMF	3	48
70	GMV	3	44

MANY COMPANIES HAVE SCHEDULED MAINTENANCE PROGRAMS IN WHICH EQUIPMENT IS PERIODICALLY CHECKED. THE PROGRAMS EXTEND EQUIPMENT LIFE AND KEEP THE COST OF REPAIRS AT A MINIMUM.

USERS RECOGNIZE THAT **ENDOLUBE®** RELIEVES THEM OF THE EXPENSE OF DAY-TO-DAY LUBRICATION MAINTENANCE. THEY ALSO RECOGNIZE THAT MECHANICAL PARTS WEAR, AND THAT THEY MUST BE REPLACED AT SOME POINT IN TIME. THE ATTACHED CHARTS GIVE THE POINTS AT WHICH **VARIDRIVE®** MAINTENANCE SHOULD BE SCHEDULED.

THE TABLE ON PAGE 47 SHOWS WEAR DIMENSIONS FOR ROTATIONAL AND RADIAL LOOSENESS. FIGURE 48 OUTLINES INSTRUCTIONS ON HOW TO MEASURE ROTATIONAL LOOSENESS AND THEREBY DETERMINE THE AMOUNT OF KEY WEAR. FIGURE 2 ON PAGE 48 OUTLINES INSTRUCTIONS ON HOW TO MEASURE RADIAL LOOSENESS AND DETERMINE THE AMOUNT OF BUSHING WEAR.

WHEN THE **ENDOLUBE** KEYS AND BUSHINGS HAVE REACHED THE OPTIMUM REPAIR POINT, PARTS SHOULD BE ORDERED AND "DOWN" TIME SCHEDULED FOR REPAIR. WHEN THE KEYS AND BUSHINGS PASS THE MAXIMUM SAFE WEAR POINT, OTHER PARTS MAY REQUIRE REPLACEMENT.

ENDOLUBE WEAR INSPECTION DIMENSIONS

VARIDRIVE FRAME	VARIDISC®	KEY DESIGN	ROTATIONAL LOOSENESS (SEE FIGURE 1)		RADIAL LOOSENESS (SEE FIGURE 2)	
			OPTIMUM REPAIR POINT	MAXIMUM SAFE WEAR	OPTIMUM REPAIR POINT	MAXIMUM SAFE WEAR
1	Driver	Square	5/32	1/4	.044	.088
	Driven	Square	5/32	1/4	.044	.088
6	Driver	Square	7/32	11/32	.046	.088
		"V"	11/32	17/32	.045	.084
	Driven	Square	3/16	5/16	.048	.088
		"V"	3/8	9/16	.046	.086
10	Driver	"V"	13/32	19/32	.050	.093
	Driven	"V"	*7/16	*5/8	*.055	*.102
14	Driver	Square	7/32	11/32	.034	.066
	Driven	Square	3/16	5/16	.040	.072
15	Driver	Square	7/32	11/32	.042	.080
		"V"	11/32	17/32	.032	.062
	Driven	Square	7/32	11/32	.046	.084
		"V"	5/16	1/2	.046	.084
23	Driver	Square	7/32	11/32	.038	.072
		"V"	5/16	1/2	.038	.072
	Driven	Square	7/32	11/32	.044	.084
		"V"	3/8	9/16	.042	.078
25	Driver	"V"	11/32	17/32	.035	.066
	Driven	"V"	*11/32	*17/32	*.040	*.075
44	Driver	Square	5/16	1/2	.048	.088
		"V"	3/8	9/16	.048	.088
	Driven	Square	9/32	15/32	.054	.098
		"V"	11/32	17/32	.051	.096
54	Driver	Square	5/16	17/32	.048	.088
	Driven	Square	9/32	15/32	.054	.098
55	Driver	"V"	5/16	1/2	.048	.088
	Driven	"V"	11/32	17/32	.051	.096

*Measurement at maximum VARIDISC radius, not at flats.

NOTE: Dimensions shown are as measured at VARIDISC O.D. as shown in Figures 1 and 2.

Optimum shaft replacement point = .002 wear per inch of shaft diameter.

FIGURE 1
ROTATIONAL LOOSENESS

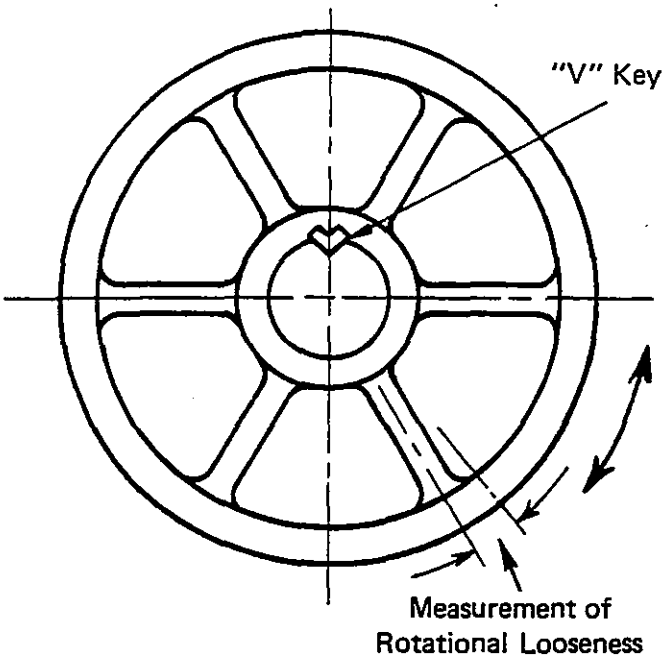

INSTRUCTIONS:

1. Inscribe reference mark on VARIDISC outside diameter.
2. Hold shaft stationary.
3. Rotate VARIDISC counter-clockwise as far as possible.
4. Rotate VARIDISC clockwise as far as possible and measure distance the reference mark moves.
5. Compare distance with dimensions given on data sheet.
6. Replace parts if recommended limits are exceeded.

FIGURE 2
RADIAL LOOSENESS

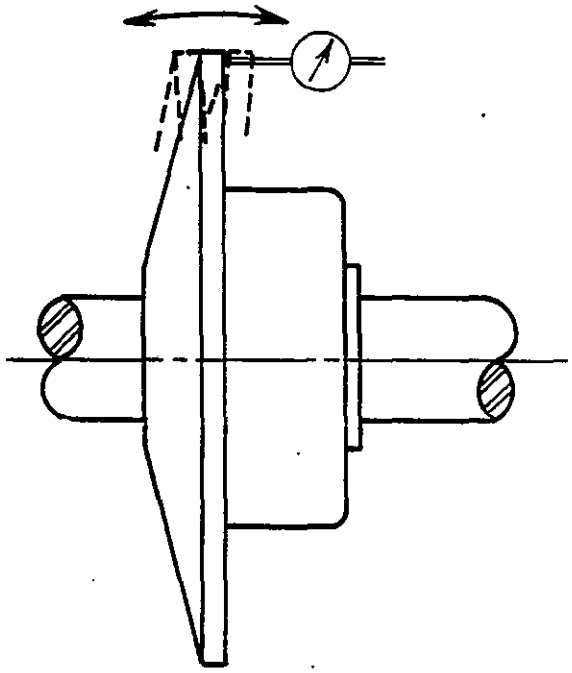

INSTRUCTIONS:

1. Cock the VARIDISC on shaft as shown in diagram, first in one direction and then in the opposite direction.
2. Measure total distance the VARIDISC rim moves. Measure as close to outside diameter as possible.
3. Compare distance with dimensions given on data sheet.
4. Replace parts if recommended limits are exceeded.

PARTS ORDERING INSTRUCTIONS

YOUR DRIVE HAS A NAMEPLATE MOUNTED ON THE MOTOR FRAME WHICH GIVES COMPLETE INFORMATION FOR THE DRIVE. WHENEVER PARTS ARE ORDERED THE FOLLOWING INFORMATION IS REQUIRED.

HP	MOTOR RPM
FRAME SIZE	OUTPUT RPM, MAX.
TYPE	OUTPUT RPM MIN.
PHASE	GEAR RATIO (IF UNIT IS FURNISHED WITH A GEARED OUTPUT)
FREQUENCY	
VOLTAGE	SERIAL NO.
NEMA DESIGN LETTER	AND/OR MODEL NO. OR I.D. NO.

A REPAIR PARTS LIST MAY BE OBTAINED SHOWING THE PARTS BREAKDOWN FOR YOUR DRIVE. IN ORDERING PARTS FURNISH COMPLETE DRIVE INFORMATION AND FROM THE REPAIR PARTS LIST GIVE THE FOLLOWING FOR QUICK, ACCURATE PART IDENTIFICATION AND REPLACEMENT.

ITEM NUMBER
DESCRIPTION OF PART
PAGE AND SECTION NO. OF THE PARTS LIST
DATE OF PARTS LIST

THE U.S. VARIBELT IS DESIGNED EXPRESSLY FOR YOUR PARTICULAR U.S. VARIDRIVE. USE OF ANY BELT OTHER THAN A U.S. VARIBELT CAN SERIOUSLY AFFECT THE PERFORMANCE, CAPACITY AND LIFE OF YOUR U.S. VARIDRIVE.

REPLACEMENT VARIBELTS OR PARTS CAN BE ORDERED THROUGH LOCAL DISTRIBUTORS, LOCAL U.S. SALES OFFICES OR THROUGH OUR MAIN PARTS DISTRIBUTION CENTERS LOCATED AT:

RENEWAL PARTS DISTRIBUTION
OLD GATE LANE
MILFORD, CT
ZIP: 06460

PHONE: AREA CODE 203
783-5200

WESTERN RENEWAL PARTS
ORANGE SALES OFFICE
1740 WEST KATELLA AVE.
SUITE C
ORANGE, CA
ZIP: 92667

PHONE: AREA CODE 714
639-9752

INSTALLATION RECORD

NAMEPLATE & INSTALLATION INFORMATION

SERIAL NUMBER ..... _____

HP ..... _____
MOTOR R.P.M. ..... _____
PHASE ..... _____
FREQUENCY ..... _____
AMPS ..... _____ AT _____ VOLTS
DESIGN ..... _____

GEAR RATIO ..... _____
OUTPUT R.P.M. ..... _____ MAX.
_____ MIN.

FRAME ..... _____
TYPE ..... _____

U.S. VARIBELT NO. ..... _____

DATE PURCHASED _____ P.O. NUMBER _____
DATE INSTALLED ..... _____
LOCATION OR JOB SITE ..... _____
MACHINE OR INSTALLATION NUMBER ..... _____
PURCHASED FROM ..... _____

RECORD OF MAINTENANCE

GRADE & TYPE OF OIL USED _____

DATE OF LAST OIL CHANGE		DATE LAST REGREASED		DATE OF LAST OVERHAUL OR REPAIR	

U.S. ELECTRICAL MOTORS
DIVISION OF EMERSON ELECTRIC CO.
125 OLD GATE LANE
MILFORD, CONNECTICUT 06460
PHONE (203) 783–5200
TELEX 221901

© 1985 U. S. Electrical Motors

Instruction 309–19 9–86

Prices, construction and ratings subject to change without notice.

Printed in U.S.A.

Galigher Vertical Sump Pumps

INSTALLATION AND OPERATING INSTRUCTIONS

for

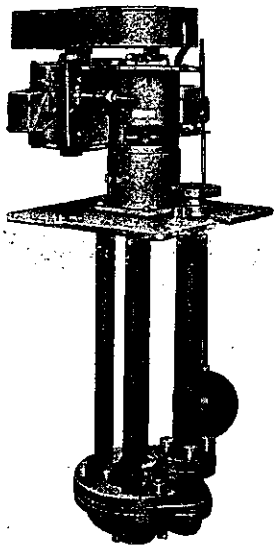

BELT DRIVEN

GALIGHER VERTICAL SUMP PUMPS

1¼" 1½" 2½"

SIZES

4" 6" 12"

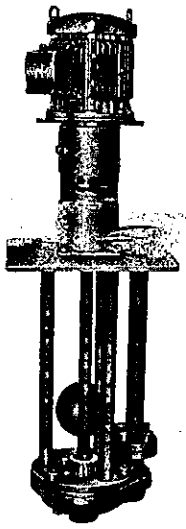

DIRECT CONNECTED

Abrasion Resistant Models

Acid Proof Models

Always Refer to Serial Number of Pump When Ordering Parts

THE GALIGHER COMPANY

HOME OFFICE: 545-585 West 8th South — P.O. Box 209 — Salt Lake City, Utah 84110

EASTERN OFFICE: 921 Bergen Avenue (Room 922), Jersey City, New Jersey 07306

U.S.A.

DECEMBER 1964

Form SP-415a

GALIGHER VERTICAL SUMP PUMPS are simple, yet ruggedly designed and constructed for continuous or intermittent service to allow economical handling of fluid slurries with abrasive solids and/or corrosive solutions, pulps, acids and alkalies in a variety of applications in chemical and mill transfer, including those of grinding, flotation, digesting, classification, or floor clean-up. These pumps are furnished in many models: Acid-proof; abrasion-resistant; hard iron or alloy; in either direct or belt-driven.

GENERAL

INSTALLATION MOUNTING METHODS

Heavy duty mounting plates are furnished on all Galigher Vertical Sump Pumps. Overhead chain support may be furnished also for special applications. These pumps may be mounted on tanks, sumps, barges, floats, etc. **Motors should be electrically grounded.** Pumps should be firmly supported on mounting plate and should not rest on the casing or screen. Minimum recommended sump dimensions and discharge line sizes are listed in chart below for easy reference. **We recommend the use of an expansion joint or an independent support so the pump will not have to support the weight of the discharge piping.**

Pump Size	Minimum Sump Dimension	Discharge Line Size
1¼	15"x15"	for 2" I.D. Hose
1½	16"x24"	1½"-150# Flange
2½	24"x30"	2½"-150# Flange
4	32"x48"	4"-5"-6"-150# Flange
6	35"x56"	6"-150# Flange
12	46"x76"	12"-150# Flange

CONTROLS

All Galigher Vertical Sump Pumps may be controlled through a manually operated motor starting switch, or automatic control. Float Switch assembly is furnished with a standard plastic (PVC) covered float or the float may be ordered in a wide variety of materials to suit the service. Liquid level probes are also available.

In general, it is advantageous to set the float so that the pump runs for relatively short periods at frequent intervals rather than allowing large amounts of solids to accumulate and then pumping the sump dry.

In clean-up installations the operator should start the pump before hosing solids into the sump so the pump can discharge material quickly. This prevents "sanding-in" of the impeller.

Our Sump Pump design results in sump agitation and when the top screen is exposed, will cause splashing. A sump cover should be provided if pump is to operate under partially submerged conditions.

Pump Size	Standard Pedestal Lengths
1¼"	22" or [illegible]
1½"	22", 31" or 41"
2½"	31", 48" or 60"
4"	48", 60", or 72"
6"	48", 60", or 72"
12"	72" or 90"

SPECIAL LENGTHS

Models longer than those indicated in chart may be obtained in the 2½", 4" and 6" sizes. Lengths are measured from the bottom of the mounting plate to the bottom of the lower casing, excluding the lower screen. A water-lubricated stabilizer bearing is used on these longer length models and is located between the pump casing and the mounting plate. THIS BEARING REQUIRES WATER LUBRICATION whenever the pump is operated. Water consumption is about 1 to 2 GPM at low pressure (maximum supply pressure is 25 psi). **WARNING! DO NOT START THE PUMP** until water has been provided for this bearing. Permanent piping from water source to the nipple on the bearing support should be installed. Valves to this line should be located so as to be inaccessible for careless shut-off by operating personnel. It is recommended that a solenoid valve, which opens when energized, be connected into the motor starting circuit. This valve should be located not more than five feet from the pump.

ROTATION – SEE ARROWS ON PUMPS

Before putting the pump into service, the direction of rotation should be checked. Proper rotation for the 1½", 2½", 4", 6", and 12" pumps is clockwise when viewed from the top. The 1¼" pump rotation is counter-clockwise when viewed from the top. **Check rotation of motor before installing V-belts.**

V-BELTS

V-Belts should be adjusted so belts have from ½" to ¾" play when depressed midway between sheaves.

An alternate method for adjusting V-belts is with a tachometer placed on the pump shaft with pump running under full load, loosen the belts until they slip and a slight reduction in RPM is noticed on the tachometer. Tighten the belt until the pump reaches full speed. The belts should then be tightened an additional amount to allow for belt stretch. Turn pump off and check play in belts. Newer belts of high tensile strength run considerably tighter than belts of previous design. Excessive belt tension will cause unnecessary load on bearings.

ALIGNMENT

In the case of direct connected pumps, the pump shaft and motor shaft should be aligned at all times. Alignment should be checked in the field before starting a new pump.

ORDERING PARTS

A complete assembly drawing accompanies each pump. Orders for parts should specify assembly drawing number, part number, part name, serial number of pump, type of material (i.e. hard iron, 316 stainless steel, etc.). Prices of parts are available on application.

LUBRICATION

Most motors are provided with grease fittings and should be greased about once each year or according to manufacturer's recommendations.

The bearings supporting the pump shaft will normally require a small amount of lubricant every 30 days. Bearings must be kept free of dirt and dust for best bearing life. Grease seals should be replaced when worn. Do not add excessive amounts of lubricant as this might cause overheating.

We recommend "Keystone 84H light" grease for the pump bearings on the 1½" and 2½" pumps, "Keystone 5P8 light corrosion resistant" grease for the pump bearings on the 12" Pump, and "Keystone 51 light Moly" high temperature grease for the pump bearings on the 1¼", 4" and 6" Pumps. Equivalent lubricants of other manufacture may be used.

REPAIR OF RUBBER-COVERED PARTS

Rubber-covered parts can be repaired by The Galigher Company, provided the metal cores are not excessively damaged. Refer to Page 6, VSP-602a entitled "REPAIR OF RUBBER-LINED AND COVERED PARTS" for further information. Rubber-covered parts should be protected from damage, excessive heat, or direct sunlight while in storage. Special instructions for the care of rubber-covered goods are available from The Galigher Company on request. Ask for Form R-602.

GENERAL TEMPERATURE LIMITATIONS AND MATERIALS OF CONSTRUCTION

SIMPLIFIED SELECTION OF CONSTRUCTION MATERIALS FOR GALIGHER VERTICAL SUMP PUMPS

TYPE MATERIAL	35-FSP	55-F	L-752-G L-637-G	L-7211-F	5-1-MA	L-7183-F	Hard Iron	316	Alloy 20	Galsol (PVC)
Slimes	✓	✓	✓	✓	✓	✓				✓
Sands	Fine	Coarse	✓	✓	✓	✓	✓			
Gravel							✓			
Hydrochloric Acid 10%	✓	✓		✓	✓	✓				✓
Concentrated		✓		✓	✓	✓				✓
Nitric Acid 5%	✓	✓	✓	✓	✓	✓				
Nitric Acid 10%				✓		✓				✓
Concentrated										
Phosphoric Acid Dilute	✓	✓	✓	✓		✓		✓	✓	✓
Concentrated		✓	✓	✓		✓			✓	✓
Sulfuric Acid 10%	✓	✓	✓	✓	✓	✓		✓	✓	✓
Sulfuric Acid 45%				✓		✓			✓	✓
Concentrated						✓	✓		✓	
Salts	✓	✓	✓	✓	✓	✓	Some	✓	✓	✓
Caustics	✓	✓	✓	✓	✓	✓	✓	✓	✓	✓
Mineral Oil, Lubricating			✓		✓		✓	✓	✓	✓
Kerosene					Test		✓	✓	✓	✓
Solvents					Test		✓	✓	✓	
Maximum Temperature	180° F.	180° F.	200° F.	220° F.	200° F.	250° F.				140° F.

The above chart is based on experience under average conditions, but does not constitute a warranty. In all cases the purchaser should give us full information on composition of the liquid and sizing of the solids.

More complete tabulations on corrosion resistance are available from The Galigher Company and from publishing houses. We suggest Industrial and Engineering Chemistry, Vol. 47, April 1955, pages 688-695.

PROCEDURE FOR ASSEMBLING 1¼" SUMP PUMP

1–Remove excess rubber from bolt holes, etc., in all rubber-covered parts.

2–Set studs in upper and lower pump casings.

NOTE: Apply "Keystone No-Gall" or a graphite oil paste to the machined and threaded portions of the shaft to prevent impeller seizing the shaft.

3–Install impeller on shaft with key, locknut, and capnut. (Impeller nut is right hand threaded.) **Spark test (see Page 8) for leaks.** Clean shaft for easier placement of bearings.

ACID-PROOF MODELS: DO NOT use a rubber lubricant, but instead use a neoprene putty (approved sample kit included with each new or reconditioned pump) or any suitable sealant on all cap nuts to insure an acid-proof seal between parts.

4–Install upper casing to pedestal with nuts and cap nuts.

5–Install shaft with impeller through hole in upper casing.

6–Insert hose adapter nipple in place in upper casing. Place lower casing over impeller and secure to upper casing with nuts and cap nuts. Check impeller to see that it is not bound between casing. If impeller is bound, remove lower casing and trim the excess rubber from pumping lobes so impeller is not more than 1⅛" thick. Re-assemble.

7–Install flinger over top end of shaft and slip to proper position on shaft.

8–Install lower seal housing (item 4) and seal (item 10) over shaft into place in upper end of pedestal.

9–Install seal (item 10) in lower end of bearing column.

10–Install seal (item 10) in upper end of bearing column.

11–Install lower bearing sleeve, bearing, and locknut over shaft and lock in place on shaft approximately 11¼" from top of shaft to top of bearing, or pull shaft and impeller upward until impeller touches upper casing and top of bearing is approximately ⅛" above top of lower seal housing. Secure to shaft by tightening locknut on top of tapered sleeve in bearing. Do NOT tighten locknut excessively as it may distort bearing.

12–Install bearing column with seals in place, top and bottom, over shaft and secure to pedestal.

13–Install upper bearing sleeve, bearing, and locknut over shaft and into top of bearing column.

14–Adjust impeller clearance by pushing shaft and impeller downward until impeller touches lower casing. Mark shaft at top of upper bearing. Pull shaft and impeller upward until impeller touches upper casing and mark shaft. Lower shaft and impeller one-half the distance between these two marks and secure bearing to shaft by tightening locknut on sleeve in bearing. DO NOT tighten locknut excessively as it may distort bearing.

15–Check impeller and shaft to see they turn freely by hand.

16–Install upper seal and upper seal housing over top of shaft to their position on top of upper bearing.

17–Install motor bracket and secure to bearing column.

18–Grease bearings if not hand-packed before assembling. Install snap-on hand hole cover(s).

19–Spark test (see Page 8) all submergible parts of pump for leaks.

20–Install driven sheave, motor, driver sheave, V-belts, or flexible coupling and motor, depending on type of drive. (Refer to belt adjustment and alignment on Page 2 of this instruction manual.)

21–Check pump for proper rotation (counter-clockwise when viewed from top of pump). See arrows.

22–Install belt guard on belt-driven pumps.

NOTES

PROCEDURE FOR ASSEMBLING 1½" SUMP PUMP

1–Remove excess rubber from bolt holes, etc., in all rubber-covered parts.

2–Set studs in discharge flange on cover plate.

3–Set studs in pump casing.

4–Install upper screen on cover plate with cap nuts.

5–Clean shaft for easier placement of bearings.

NOTE: Apply "Keystone No-Gall" or graphite oil paste to machined and threaded portions of shaft to prevent impeller seizing the shaft.

6–Install impeller on shaft with key, and impeller lock-nut. (Impeller nut is right hand thread.) **Spark test (see Page 8) for leaks.**

7–Place cover plate with upper screen in place on pedestal.

8–Insert shaft, with impeller installed, through hole in cover plate and upper screen. Slip rubber flinger over top end of shaft to its proper position.

ACID-PROOF MODELS: DO NOT use a rubber lubricant, but instead use a neoprene putty (approved sample kit included with each new or reconditioned pump) or any other suitable sealant on all cap nuts to insure an acid-proof seal between parts.

9–Install lower casing and secure to cover plate and pedestal with cap nuts.

10–Install lower bearing in bearing housing and secure.

11–Install upper bearing in bearing housing and leave loose. (This bearing is used to center shaft and impeller in casing after impeller clearance has been set.)

12–Slip bearing housing, complete with bearings over upper end of shaft and secure bearing housing to pedestal mounting plate.

13–Adjust impeller to its proper clearance between casing and cover plate (approximately ⅛" top and bottom of impeller) by use of lower bearing. When proper clearance has been obtained, tighten set screws in bearing to hold this adjustment.

14–By moving the top bearing, which was left loose in step 11, a slight amount to one side or the other, shaft and impeller can be centered in casing in most cases. (If this movement of the top bearing will not center impeller and shaft in casing, shims will have to be placed on proper side of bearing housing between bearing housing and pedestal to tilt top of bearing housing in the direction necessary to properly center impeller and shaft in casing.) Secure upper bearing in bearing housing and tighten set screws in bearing, securing bearing to shaft.

15–Check impeller and shaft to see that they turn freely by hand, and impeller clearance is correct. If necessary, re-adjust.

16–Grease bearings if not hand packed before assembly. Install snap-on hand hole cover(s).

17–Install discharge pipe with cap nuts on discharge flange of cover plate and clamp top of discharge pipe in place on top of mounting plate and secure.

18–Install lower screen on bottom of pump casing with cap nuts.

19–Spark test (see Page 8) all submergible parts of pump for leaks.

20–Install driven sheave, motor, driver sheave, V-belts, or flexible coupling and motor depending on type of drive. (Refer to belt adjustment and alignment on Page 2 of this instruction manual.)

21–Check pump for proper rotation (clockwise when viewed from top of pump). See arrow.

22–Install belt guard on belt-driven pumps.

NOTES

PROCEDURE FOR ASSEMBLING 2½" SUMP PUMP

1–Remove excess rubber from bolt holes, etc., on all rubber-covered parts.

2–Set studs in discharge flange on cover plate.

3–Set studs in pump casing.

4–Install upper screen on cover plate with cap nuts.

5–Clean shaft for easier placement of bearings. Slip flinger over shaft to its proper position.

6–Install seal in lower bearing cap and slip cap, seal and gasket over shaft.

7–Install bearing sleeve, bearing, and locknut over shaft and position 21⅜" from top of shaft to top of bearing. Secure bearing in this position on shaft by tightening locknut on top of bearing sleeve. CAUTION! DO NOT tighten locknut excessively as it may distort bearing.

8–Install bearing column by slipping it over top of shaft and lower bearing. Secure lower bearing cap to bearing column.

9–Install pedestal by slipping over lower end of shaft and secure to bearing column.

10–Slip cover plate with upper screen in place over bottom end of shaft to its place on pedestal.

NOTE: Apply "Keystone No-Gall" or a graphite oil paste to machined and threaded portions of shaft to prevent impeller seizing the shaft.

11–Install impeller with key, locknut, and cap nut. Impeller nut is right hand thread. **Spark test (see Page 8) for leaks.**

NOTE: On abrasion-resistant models use "Keystone FSC Rubber Lubricant" or equivalent on all cap nuts before installing.

ACID-PROOF MODELS: DO NOT use a rubber lubricant, but instead use a neoprene putty (approved sample kit included with each new or reconditioned pump) or any other suitable sealant on all cap nuts to insure an acid-proof seal between parts.

12–Install lower casing to cover plate and pedestal with nuts and cap nuts.

13–Install lower screen with cap nuts.

14–Install upper bearing sleeve, bearing, and locknut over top of shaft to its position in top of bearing column.

15–Adjust impeller clearance by centering impeller equidistant between pump casing and cover plate top and bottom of impeller. Push shaft and impeller downward until impeller touches lower casing. Mark shaft at top of upper bearing. Pull shaft and impeller upward until impeller touches cover plate. Mark shaft at top of bearing. Lower shaft and impeller one-half the distance between marks and secure bearing to shaft by tightening locknut on top of upper bearing. CAUTION! DO NOT tighten locknut excessively as it may distort bearing.

16–Install seal in upper bearing cap and slip cap over top of shaft to its position on top of bearing and secure.

17–Check to see that impeller and shaft turn freely by hand and are centered in pump casing. If not centered, it will be necessary to loosen bearing column on pedestal. Place shims on one side or the other between bearing column and pedestal to tilt bearing column so impeller and shaft will center in pump casing. Secure bearing column.

18–Install discharge pipe to discharge flange on cover plate with cap nuts. Set top of discharge pipe in clamp provided on top of mounting plate and secure.

19–Install motor bracket or motor bracket support, depending on type of drive, on top of bearing column and secure.

20–Grease bearings if not hand packed before assembly.

21–Spark test (see Page 8) all submergible parts of pump for leaks.

22–Install driven sheave, motor, driver sheave, V-belts, or flexible coupling and motor, depending on type of drive. (Refer to belt adjustment and alignment on Page 2 of this instruction manual.)

23–Check pump for proper rotation (clockwise when viewed from top of pump). See arrow.

24–Install belt guard on belt-driven pumps.

SPECIAL IMPELLERS FOR DIRECT DRIVEN 2½" PUMP ONLY

8" and 9" impellers in (hard iron ONLY) are available for the 2½" direct driven pump. These smaller diameter impellers enable the pump to be adapted to various head and gallonage requirements with the "standard speed" motors. Consult The Galigher Company Engineering Department for full details.

NOTES

REPAIR OF RUBBER-LINED AND RUBBER-COVERED PARTS FOR VACSEAL AND GALIGHER VERTICAL SUMP PUMPS

Many rubber-covered or rubber-lined parts for the VACSEAL Pump and the Galigher Vertical Sump Pump can be salvaged for re-covering by proper maintenance and inspection procedure.

To assist our customers in this regard, particularly in the inspection of metal cores of the pump wearing parts prior to shipping to our plant in Salt Lake City, Utah, for repairing, we have prepared the following guide. The primary purpose of this guide is to save our customers transportation and handling costs on parts that cannot be repaired. The guide has been prepared with consideration that —

(1) repair and re-covering cost must not exceed new part prices;

(2) repaired and re-covered part must give satisfactory service to the user when returned to service.

Removal of rubber is accomplished by burning and should be performed with caution. Several parts ignited together can generate enough heat to warp and damage the metal. As burning progresses, melted rubber should be scraped away from metal to reduce heat. It is obvious the metal must be cleaned properly in order to insure effective inspection. Do not weld patches over holes in cast iron parts.

Replaceable Liner-type Casing

Metal portions of replaceable liners CANNOT be repaired and re-covered to the advantage of the user.

Fixed Liner-type Casing (VACSEAL Part 1, *Sump Pump Part 10)

The casing CANNOT be repaired and re-covered if —

(a) it contains apparent cracks;

(b) more than two stud holes have been destroyed due to stripped threads, abrasion, or corrosion (such holes should not be adjacent);

(c) holes are worn through the metal;

(d) either mounting flange face is grooved completely through from inner to outer edge.

VACSEAL casings should be accompanied by inspection covers (Part 6). No extra charge is made for re-covering inspection covers if they accompany corresponding casings.

Fixed Liner Suction Covers (VACSEAL Part 2, *Sump Pump Part 7)

The suction cover CANNOT be repaired and re-covered if—

(a) it contains apparent cracks;

(b) holes are worn through the metal;

(c) over 25% of the area has been pitted deeply; even wear over the total area and without deep pits can be covered satisfactorily.

Back Plates (VACSEAL Part 4)

The VACSEAL back plates CANNOT be repaired and re-covered if —

(a) they contain apparent cracks;

(b) more than two stud holes are destroyed due to stripped threads, abrasion, or corrosion; holes should not be adjacent;

(c) more than two bosses are worn below the original machined surface; bosses should not be adjacent;

(d) holes are worn through the plate.

Adapter Plates (VACSEAL Part 8)

These can be re-lined with rubber but gland bushings (Part 15) must be removed prior to burning or shipping.

Impeller (Part 3)

The pump impeller CANNOT be repaired if —

(a) Recovered 7 times on 1½" through 4" sizes and 5 times on 6" and 8" (VACSEAL PUMPS Only).

(b) sufficient metal has been worn or corroded away to impair the balance: this is serious especially if wear is not distributed equally. For instance, [illegible] half the disc;

(c) holes are worn completely through the disc;

(d) damage to vanes is more than VERY MINOR;

(e) threads are destroyed or in poor condition.

Sump Pump Shafts, Pedestals, Discharge Pipes (Parts 6, 1, 26/49

These are repairable if metal is not damaged.

SHIPPING INSTRUCTIONS — A purchase order for repair of the rubber-lined and rubber-covered parts should be mailed to The Galigher Company, Box 209, Salt Lake City, Utah, and the packing list accompanying the parts must refer to the purchase order number. The purchase order and packing list must show all parts by QUANTITY, PART NAME, PUMP SIZE, RUBBER TYPE (natural, neoprene, etc.), and, whenever possible or practical to do so, list SERIAL NUMBER OF PUMP TO WHICH PARTS APPLY. When VACSEAL casings are returned, inspection covers should accompany them. Purchase orders should STATE WHETHER IRREPARABLE PARTS SHOULD BE DISCARDED, RETURNED, OR REPLACED BY NEW PARTS.

Customer should ship parts FREIGHT PREPAID to The Galigher Company, 545 West 8th South Street, Salt Lake City, Utah. Return shipment will be by collect freight, cheapest way, unless specific instructions are issued on purchase order. All parts returned for repair are inspected when received and also after rubber removal, if not removed by customer. Customer then is informed of parts condition if they are found defective and irreparable.

CHARGES

In general, the repair price of all molded pump parts and fixed liner VACSEAL parts is 60% of the new price, plus any machining or welding charge. If the rubber is removed by the customer, the repair charge is 45% of the cost of the new parts, plus any machining or welding charge. Discounts are subject to change and DO NOT APPLY to non-molded items such as 4", 6" and 12" Sump Pump cases, pedestals, discharge pipes, etc. Repair prices on such items available on request or performed on labor and material basis.

*1½" and 2½" Sump Pump sizes only.

REPLACEMENT OF PARTS 4" AND 6" PUMPS ONLY

The casings – elbow – discharge pipe and screens are held together by stainless steel studs with stainless steel nuts and on acid-proof models, have cap nuts, whose purpose is to prevent corrosive liquid from reaching the studs and nuts.

The impeller is changed by removing the impeller nut, locknut, and washer. Holding the shaft, turn the impeller to the left to remove from the shaft. (Shaft has right hand thread.) Before installing the impeller, apply "Keystone No-Gall" or a graphite oil paste to the machined and threaded portions of the shaft to prevent the impeller seizing to the shaft.

ABRASION-RESISTANT MODELS:

When re-assembling, the cap nuts should be lubricated with "Keystone FSC rubber lubricant" or equivalent.

ACID-PROOF MODELS: **Do NOT use a rubber lubricant, but instead use a neoprene putty (approved sample kit included with each new or reconditioned pump) or any other suitable sealant on all cap nuts to insure an acid-proof seal between parts. Always spark-test after repair (see Page 8).**

PROCEDURE FOR COMPLETE ASSEMBLY 4" AND 6" PUMPS

1–Assemble pedestal (item 1) and upper half of casing (item 7). Casing has 4 O-rings which are molded in with remainder of covering, (2 on inside of bolt circle, and 2 on outside of bolt circle) to insure a seal between these parts without excessive tightening. Do NOT tighten these nuts excessively (approximately 75 lbs. torque wrench setting). Assemble impeller (item 3) on shaft (item 6) with impeller nut (item 38). Spark test (see Page 8) for leaks.

2–Insert shaft through casing and pedestal and assemble lower half of casing (item 10) to (item 7).

3–Slip lower bearing housing (item 8 complete with seals) over shaft and place on top flange of pedestal. Hold in place with two "C" clamps. Slip grease-packed bearing (item 33 complete with sleeve, locknut and washer) over shaft and into bearing housing. The shaft should be supported in approximately the center of pedestal. Locate impeller in center of casing with equal clearance on both sides of impeller. Locate bearing 7/32" below top face of housing and tighten locknut. Check internal clearance of bearing with feeler gauge. A .003 feeler should just pass between roller and outer race on the loose side of bearing. The locknut should be tightened until this clearance is obtained. Lock locknut in this position.

4–Remove "C" clamps and assemble bearing cap (items 9) and bearing column (item 2) on pedestal (item 1). Then put upper bearing housing (item 11 complete with seals in place on column. Now slip upper grease-packed bearing (item 36 complete with sleeve, locknut and washer) over shaft and into housing. Clamp outer bearing race into place. This can be easily accomplished through the use of a positioning gauge as shown as item "A" in the drawing on this page. This tool is available from The Galigher Company for $30.00 each. Or, if you wish to build it, The Galigher Company will furnish detail drawings of this tool, free upon request. If the positioning gauge is used, center the impeller and turn adjusting screw "B" until it contacts the end of the shaft. If the gauge is not used, allow more clearance on top of the impeller than the bottom so that as the locknut is tightened on the tapered bushing of the upper bearing the impeller will rise until it is exactly centered between the case halves. Tighten locknut until sleeve grips shaft firmly; then, if positioning gauge is used, loosen adjusting screw "B" until shaft is free. Check internal clearance of bearing with feeler gauge. If too loose, tighten locknut until a slight drag is felt when a .003 feeler is pulled through between roller and outer race on the loose side of bearing. Lock locknut in position. Check impeller clearance; it should be centered in the casing halves. Remove gauge and replace with upper bearing cap (item12). If bearings are hand packed with grease before assembling, the addition of more grease is not necessary.

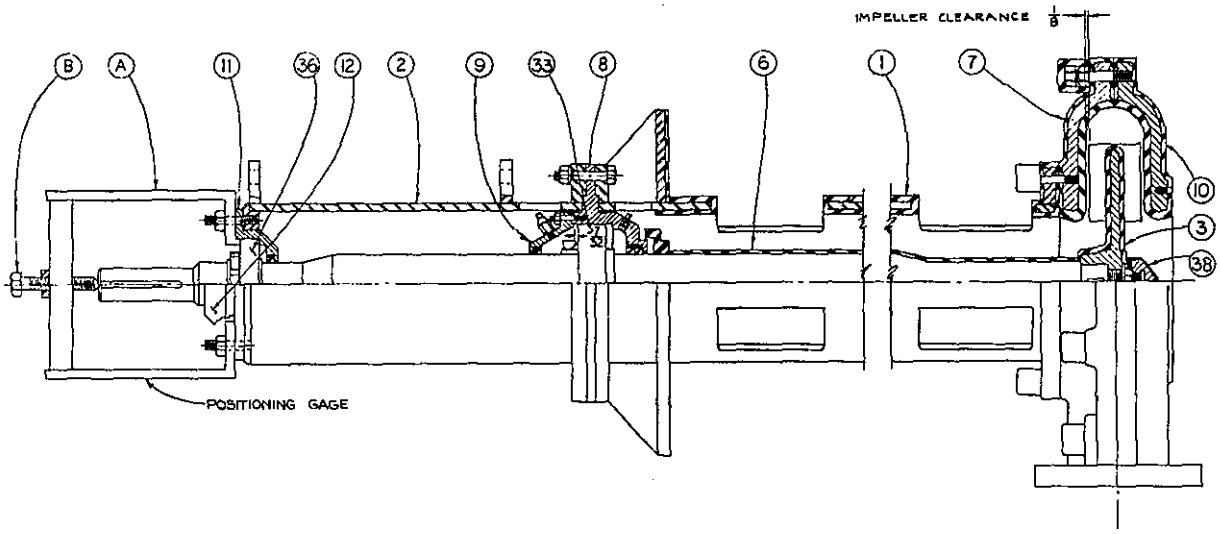

DIAGRAM FOR ASSEMBLING 4" AND 6" GALIGHER VERTICAL SUMP PUMPS

NOTE: For pumps manufactured after 1964, which are Models 4-SR-D-100 and 6-SR-D-100, or other pumps which may have been converted to Models 4-SR-C-100 or 6-SR-C-100, follow previous procedure through steps 1, 2 and 3, but substitute the following for step 4:

4A—Remove "C" clamps, assemble bearing cap (item 9)* and bearing column (item 2) onto pedestal (item 1). Thread lock nut (item 22) onto shaft, place lock washer (item 65) and bearing spacer sleeve (item 29) over shaft and install upper bearing (item 36) securely in place. The bearing lock washer (item 67) is placed over shaft and bearing lock nut (item 66) threaded onto shaft. Center the impeller between the case halves by adjusting the lock nuts above and below the upper bearing in the following manner: The shaft and impeller are to be raised until the impeller begins to rub the case (this is determined by turning the shaft by hand) and the position marked. The impeller and shaft are then adjusted in the opposite direction until the impeller rubs the lower case. This position is marked, a point midway between the two marks is determined, and the impeller and shaft are then adjusted to this point. The lock nuts are tightened securely against the bearing and the impeller clearance is checked to make sure the impeller is centered between the two case halves. The lock nuts are then secured in place by use of the lock washers and the shaft and impeller are then checked to see if they turn free.

*Lower bearing cap (item 9) is included in bearing column (item 2) on Models 4-SR-D-100 and 6-SR-D-100 and thus need not be installed separately.

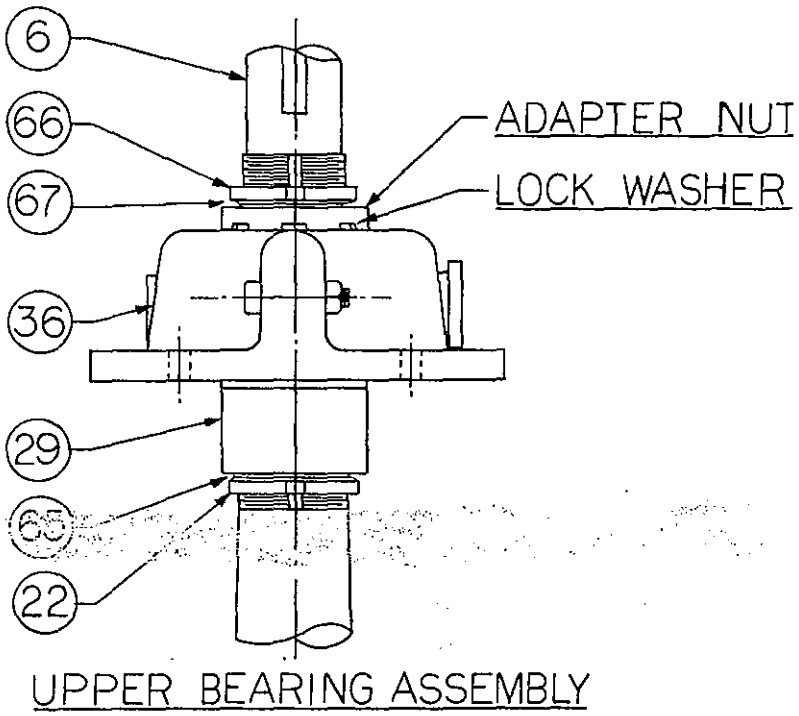

UPPER BEARING ASSEMBLY for 4 and 6" Sump Pumps Models 4-SR-C-100 & 6-SR-C-100, 4-SR-D-100 & 6-SR-D-100

SPARK TESTING

EQUIPMENT: High frequency - low amperage units are commercially available having adjustable voltages from 4,500 to 30,000 voltage potential. The electrode must be carefully controlled and kept in motion to avoid overheating and burn-through. The material under test is scanned with the electrode probe passing over but not in contact with the material. The probe emits a continuous bluish haze except when near a fault, wherein the color brightens and tracks directly to the flaw.

CAUTION: Control voltage potential at a level limited to, but sufficient to jump "air gap" and pass through any holidays in the coating.

NOTE: Sealing putties do not develop their full dielectric strength until they have cured completely. Care must be exercised in spark testing freshly applied sealing compounds immediately following their application. Allow 1 to 2 hours cure at 70° F. before testing. Auxiliary heat may be applied to facilitate faster cures providing temperatures do not exceed 150° F. Preheating putty compounds to 125° F. prior to acceleration will expedite initial cure. Sealing putty specifications N-250-1, accelerator N-300-5, available from The Galigher Company.

SPECIAL OPERATING AND MAINTENANCE INSTRUCTIONS FOR 12" PUMPS

BEARINGS AND SEALS

The top bearing (item 36) is a Dodge, special duty, flanged bearing, equipped with Timken tapered roller bearings and with automotive type piston ring seals. The bottom bearing (item 33), located just above the mounting plate) is a Dodge double interlock unit with Timken tapered roller bearings and double labyrinth seals. The top bearing carries the weight of the shaft and the thrust of the impeller. It is held onto the shaft by means of a tapered sleeve and with a nut above and below the bearing for adjustment. The bottom bearing is attached to the shaft by four set screws. This bearing "floats" inside the bearing column; i.e., it supports the shaft horizontally and is free to travel vertically for shaft expansion and impeller clearance adjustment. See procedure for complete assembly.

LUBRICATION (Refer to Lubrication on Page 2)

A small amount of grease should be added every 30 to 60 days, depending on conditions such as dust, spray, continuous or intermittent duty, and speed. Normal temperature and a slight showing of grease at the seals indicates proper lubrication, and this condition should be maintained, if possible.

ACID-PROOF MODELS: DO NOT use a rubber lubricant, but instead use a neoprene putty (approved sample kit included with each new or reconditioned pump) or any other suitable sealant on all cap nuts to insure an acid-proof seal between parts. Always spark test (see Page 8) after repair.

IMPELLER

The impeller, which is keyed to the shaft, is held in place by means of a ¾" cap screw: this is protected from corrosion by a cap bolt. Remove cap bolt and cap screw from impeller and use standard 1" diameter, coarse thread cap screw in hub of impeller as a jack.

IMPELLER CLEARANCE

The impeller clearance should be checked and adjusted after replacement of parts, repair, and before installation. Clearances should be equal between top and bottom of impeller in case.

To lower the shaft position in the upper bearing, loosen upper and lower locknuts (items 75-77). Loosen adapter nut (see bearing, item 36). Tighten sleeve (item 70) with spanner wrench until shaft is drawn through the bearing to the desired position. Tighten adapter nut (see bearing, item 36). Tighten upper and lower locknuts (items 75-77). Reset lockwasher lugs (items 76-78) in locknuts.

To raise the shaft position in the upper bearing loosen upper and lower locknuts (items 75-77). Loosen adapter nut (see bearing, item 36). Back sleeve, (item 70) down shaft to provide clearance for adjusting. Tighten upper locknut (item 75) to draw shaft through bearing to the desired position. Tighten adapter nut (see bearing, item 36). Tighten sleeve (item 70). Tighten lower locknut (item 77). Reset lockwasher lugs (items 76-78) in locknuts.

Check to make sure adjustment has been held after all nuts have been tightened.

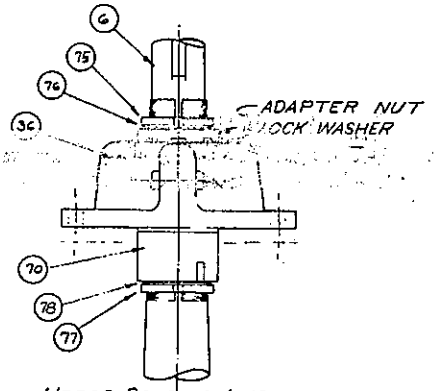

UPPER BEARING ASSEMBLY

CAP NUTS

All submerged threaded fasteners, on the acid-proof model, are protected with cap nuts or cap bolts. Apply rubber cement to the surfaces of the cap nuts or cap bolts which come in contact with the pump before turning cap nut down hand tight. This method is recommended to keep cap nuts from unscrewing from vibration. The seal should be broken with some dull tool, such as a putty knife, when they are removed. **Always** spark test (see page 8) after repair.

PROCEDURE FOR COMPLETE ASSEMBLY

To assemble pump, start with shaft (item 6), locate and secure lower bearing to shaft 52 1/16" from top of shaft to top of bearing; install nut (item 77), washer (item 78), and sleeve (item 70), in that order over end of shaft. Install upper bearing (item 36), on bearing column (item 2), and insert shaft in bearing column from bottom. Splash plate (item 69), should then be installed in pedestal (item 1). Bearing column (item 2) is then bolted to pedestal (item 1). The flinger (item 21) is then pushed over shaft from bottom end to its proper position as shown in assembly drawing. Install upper case half (item 7), and impeller (item 3). Install lockwasher (item 76) and locknut (item 75) on top of shaft and adjust impeller clearance as described under paragraph entitled "Impeller Clearance."

Install the lower case half (item 10). Do not tighten case bolt nuts excessively as this will change impeller clearance. The remainder of the pump can be assembled in any reasonable sequence.

CHART A

PUMP SIZE	MAXIMUM HORSEPOWER	MAXIMUM HEAD	MAXIMUM G.P.M.	MAXIMUM SPHERE SIZE CAPABLE OF PASSING IMPELLER		MAXIMUM PARTICLE SIZE CAPABLE OF PASSING SLOTS IN SCREENS		MAXIMUM RECOMMENDED R.P.M.*
				Rubber Lined	Hard Iron	Rubber Lined	Hard Iron	
1¼"	1½	25 feet	50	5/16"	5/16"	—	—	2500
1½"	5	40 feet	100	5/8"	5/8"	¼"	¼"	2000
2½"	30	80 feet	300	7/8"	7/8"	3/8"	3/8"	1800
4"	50	80 feet	900	1 3/8"	1 5/8"	3/8"	7/8"	1200
6"	50	90 feet	1800	1 3/8"	1 5/8"	3/8"	7/8"	1000
12"	150	60 feet	5000	3"	—	1¼"	—	700

*If speeds must be exceeded to obtain the required head and gallonage, consult The Galigher Company.
In general, minimum speeds will produce minimum wear.
Speeds shown in chart are for the shortest length of pumps only.

MAINTENANCE RECORD
GALIGHER VERTICAL SUMP PUMP

Kohler Power Systems 8.5/12Res Generator

Model: 8.5/12RES

KOHLER® POWER SYSTEMS

Multi-Fuel
LP Vapor/Natural Gas

ISO 9001 KOHLER POWER SYSTEMS NATIONALLY REGISTERED

The Kohler® Advantage

- **The Smart Choice**
  Known for its reliability, the Kohler 12 kW generator set was named a "Best Buy" as well as the highest-rated generator in a leading consumer magazine in October, 2006
- **Powerful**
  Exclusive Powerboost™ technology allows the Kohler 12 kW generator to start and run a typical 4 ton (48,000 BTU) central air conditioner, while still running other home appliances and electronics *
- **Cleaner Power for Sensitive Electronics**
  Protects sophisticated electronics with clean, stable power that exceeds strict utility requirements and IEEE standards for total harmonic distortion (THD)
- **Faster Response**
  Kohler generator sets restore power in as little as 10 seconds
- **Quiet**
  Quiet operation: 65 dB(A) at 7 m maintains neighborhood solitude
- **Premium Five-Year Limited Warranty**

Standard Features

- **ADC-RES Advanced Digital Control**
  - Designed for today's most sophisticated electronics
  - Electronic speed control responds quickly to varying household demand
  - Digital voltage regulation protects your sensitive electronics from harmonic distortion and unstable power quality
  - LED display shows system status and setup information
- **Engine Features**
  - Kohler Command PRO® OHV engine with hydraulic valve lifters for reliable performance without routine valve adjustment or lengthy break-in requirements
  - Digital Spark Advance Ignition (DSAI) optimizes engine performance for natural gas and LP vapor fuels (12RES only)
  - Simple field conversion between natural gas and LP vapor fuels while maintaining emission certification
- **Designed for Easy Installation**
  - Polymer base eliminates the need for a concrete mounting pad, reducing installation time and cost
  - Fuel and electrical connections through the enclosure wall eliminate the need for stub-ups through the bottom
  - Load connection terminal block allows easy field wiring
  - Designed for outdoor installation only
- **Certifications**
  - California Air Resources Board (CARB)-certified for both LP vapor and natural gas (60 Hz models)
  - Meets Environmental Protection Agency (EPA) nonstationary unit requirements (60 Hz models)
  - UL 2200 listed (60 Hz models)
  - UL listed to Canadian safety standards (60 Hz models)
  - Approved for stationary standby applications in locations served by a reliable utility source

Generator Ratings

					Standby Ratings			
					Natural Gas		LP Gas	
Model	Voltage	Phase	Hz	Alternator	kW/kVA	Amps	kW/kVA	Amps
8.5RES	120/240	1	60	2F4	7.0/7.0	29	8.5/8.5	35
8.5RES	115/230	1	50	2F4	6.3/6.3	27	7.5/7.5	33
12RES	120/240	1	60	2F4	10.4/10.4	43	12.0/12.0	50
12RES	115/230	1	50	2F4	9.3/9.3	40	10.5/10.5	46

RATINGS: Standby ratings apply to installations served by a reliable utility source. All single-phase units are rated at 1.0 power factor. The standby rating is applicable to variable loads with an average load factor of 80% for the duration of the power outage. No overload capacity is specified at this rating. Ratings are in accordance with ISO-3046/1, BS5514, AS2789, and DIN 6271. GENERAL GUIDELINES FOR DERATING: *ALTITUDE*: Derate 4% per 305 m (1000 ft.) elevation above 153 m (500 ft.). *TEMPERATURE*: Derate 1.5% per 5.5°C (10°F) temperature increase above 16°C (60°F). Availability is subject to change without notice. The generator set manufacturer reserves the right to change the design or specifications without notice and without any obligation or liability whatsoever. Contact your local Kohler Co. generator distributor for availability.

* Due to the cycling operation of many electrical appliances, the generator set may not run all appliances simultaneously. Check the appliance manufacturer's specifications for actual power requirements. Consult a Kohler® Power Systems professional for your exact residential power system requirements.

Application Data

Engine

Engine Specifications	60 Hz	50 Hz
Manufacturer	Kohler	
Engine: model, type		
8.5RES	CH640 4-Cycle	
12RES	CH740 4-Cycle	
Cylinder arrangement	V-2	
Displacement, L (cu. in.)		
8.5RES	0.624 (38)	
12RES	0.725 (44)	
Bore and stroke, mm (in.)		
8.5RES	77 x 67 (3.03 x 2.64)	
12RES	83 x 67 (3.27 x 2.64)	
Compression ratio		
8.5RES	8.5:1	
12RES	9.0:1	
Main bearings: quantity, type	2, Parent Material	
Rated rpm	3600	3000
Max. engine power at rated rpm, kW (HP)		
CH20, LP vapor	11.5 (15.4)	10 (14.0)
CH20, natural gas	10.0 (13.4)	9.1 (12.2)
CH740, LP vapor	17.6 (23.6)	15.8 (21.2)
CH740, natural gas	15.3 (20.5)	13.8 (18.5)
Cylinder head material	Aluminum	
Valve material	Steel/Stellite®	
Piston type and material	Aluminum Alloy	
Crankshaft material	Heat Treated, Ductile Iron	
Governor: type	Electronic	
Frequency regulation, no load to full load	Isochronous	
Frequency regulation, steady state	±0.5%	
Air cleaner type	Dry	

Engine Electrical

Engine Electrical System	
Ignition system	Electronic, DSAM
Starter motor rated voltage (DC)	12
Battery charger, ampere rating	6
Battery (purchased separately):	
Ground	Negative
Volts (DC)	12
Battery quantity	1
Recommended cold cranking amps (CCA) rating for -18°C (0°F)	525

Exhaust

Exhaust System	60 Hz	50 Hz
Exhaust flow at rated kW, m^3/min. (cfm)		
8.5RES	3.3 (115)	2.7 (96)
12RES	3.8 (135)	3.2 (113)
Exhaust temperature at rated kW, dry exhaust, °C (°F)	760 (1400)	

Lubrication

Lubricating System	
Type	Full Pressure
Oil capacity (with filter), L (qt.)	1.9 (2.0)
Oil filter: quantity, type	1, Cartridge
Oil cooler	Integral

Operation Requirements

	8.5RES		12RES	
Cooling Air	60 Hz	50 Hz	60 Hz	50 Hz
Total inlet air, m^3/min. (cfm)	27.8 (980)	23.2 (820)	28.0 (990)	23.4 (825)
Cooling air, m^3/min. (cfm)	26.9 (950)	22.4 (790)	26.9 (950)	22.4 (790)
Combustion air, m^3/min. (cfm)	0.9 (33.4)	0.8 (28.0)	1.1 (39.2)	0.9 (32.6)

Fuel Requirements

Fuel System	
Fuel types	Natural Gas or LP Vapor
Fuel supply inlet	1/2 NPT
Fuel supply pressure, kPa (in. H_2O):	
Natural gas	1.2–2.7 (5-11)
LP	1.7–2.7 (7-11)

Minimum Gas Pipe Size Recommendation, in. NPT

	8.5RES		12RES	
Pipe Length, m (ft.)	Natural Gas (132,000 Btu/hr.)	LP Vapor (180,000 Btu/hr.)	Natural Gas (193,000 Btu/hr.)	LP Vapor (203,000 Btu/hr.)
8 (25)	3/4	1/2	3/4	3/4
15 (50)	3/4	3/4	1	3/4
30(100)	1	1	1	1
46(150)	1	1	1 1/4	1
61(200)	1	1	1 1/4	1

Fuel Consumption at % rated load

	8.5RES		12RES	
% Load	60 Hz	50 Hz	60 Hz	50 Hz
Natural Gas, m^3/hr. (cfh)				
100%	3.7 (132)	3.3 (118)	5.4 (193)	4.8 (173)
75%	3.2 (113)	2.9 (101)	4.7 (163)	4.2 (148)
50%	2.6 (93)	2.3 (83)	3.5 (124)	3.1 (108)
25%	2.2 (77)	1.9 (69)	2.6 (93)	2.4 (84)
LP Vapor, m^3/hr. (cfh)				
100%	2.0 (72)	1.7 (61)	2.3 (81)	2.1 (74)
75%	1.3 (45)	1.1 (38)	2.1 (75)	1.9 (68)
50%	1.0 (36)	0.9 (31)	1.8 (60)	1.5 (53)
25%	0.8 (29)	0.7 (25)	1.2 (45)	1.1 (40)
LP Vapor, kg/hr. (lb./hr.)				
100%	3.7 (8.4)	3.2 (7.1)	4.3 (9.4)	3.9 (8.6)
75%	2.4 (5.2)	2.1 (4.4)	3.9 (8.7)	3.6 (7.9)
50%	1.9 (4.2)	1.7 (3.6)	3.4 (7.0)	2.8 (6.2)
25%	1.5 (3.4)	1.3 (2.9)	2.2 (5.2)	2.1 (4.7)

LP vapor conversion factors:
8.58 $ft.^3$ = 1 lb.
0.535 m^3 = 1 kg
36.39 $ft.^3$ = 1 gal.

Nominal fuel rating:
Natural gas: 37 MJ/m^3 (1000 $Btu/ft.^3$)
LP vapor: 93 MJ/m^3 (2500 $Btu/ft.^3$)

Alternator

Alternator Features

- Compliance with NEMA, IEEE, and ANSI standards for temperature rise
- Self-ventilated and dripproof construction
- Vacuum-impregnated windings with fungus-resistant epoxy varnish for dependability and long life
- Superior voltage waveform and minimum harmonic distortion from skewed alternator construction
- Digital voltage regulator with ±1.5% no-load to full-load RMS regulation
- Rotating-field alternator with static exciter for excellent load response
- Skewed generator construction produces a smooth AC waveform

Alternator Specifications

Specifications	PowerBoost™ Generator 1-Phase
Manufacturer	Kohler
Output reconnectable	120/240
Type	2-Pole, Rotating Field
Leads, quantity	4
Voltage regulator	Digital
Insulation:	NEMA MG1-1.66
Material	Class H
Temperature rise	Class H
Bearing: quantity, type	1, Sealed Ball
Coupling	Direct
Amortisseur windings	Full
Voltage regulation, no-load to full-load RMS	±1.5%
One-step load acceptance	100% of Rating
Peak motor starting kVA @ 240 V:	
8.5RES	23
12RES	32

ADC-RES Controller

Controller Features

- Membrane keypad:
  - Arrow keys step through generator set status displays
  - Password-protected access to system configuration and adjustment menus
  - System voltage/frequency selection and engine configuration
  - Voltage, gain, and engine speed adjustment
- LED display:
  - Engine runtime, hours
  - Output voltage, VAC
  - Output frequency, Hz
  - Battery voltage, VDC
  - Crank cycle status
  - Setup information
  - Software version
  - Faults
- Faults displayed:
  - High battery voltage
  - High engine temperature
  - Low battery voltage
  - Low oil pressure
  - Overcrank
  - Overfrequency
  - Overspeed
  - Overvoltage
  - Underfrequency
  - Undervoltage
- Compact controller integrally mounted to the generator set
- Remote two-wire start/stop capability
- Digital isochronous governor to maintain steady-state speed at all loads
- Digital voltage regulation: ±1.5% RMS no-load to full-load
- Automatic start with programmed cranking cycle
- Field-upgradeable application software
- Front-access DB9 connector for software upgrade on the junction box
- Generator set master switch (Run/Off-Reset/Auto) on the junction box

KOHLER CO., Kohler, Wisconsin 53044 USA
Phone 920-565-3381, Fax 920-459-1646
For the nearest sales and service outlet in the
US and Canada, phone 1-800-544-2444
KohlerPower.com

Kohler Power Systems
Asia Pacific Headquarters
7 Jurong Pier Road
Singapore 619159
Phone (65) 6264-6422, Fax (65) 6264-6455

Standard Features

- ADC-RES Advanced Digital Control
- Battery cables
- 6-amp battery charger
- CARB- and EPA-certified fuel system
- Critical silencer
- Designed for outdoor installation only
- Five-year limited warranty
- Fuel solenoid valve and secondary regulator
- Integral vibration isolation
- Line circuit breaker
- Multi-fuel system, LP vapor/natural gas, field-convertible
- Oil drain extension with shutoff valve
- Polymer base
- Rodent-resistant construction
- Sound-deadening, flame-retardant foam per UL 94, class HF-1
- Sound enclosure, quiet 65 dB(A) operation

Available Accessories

Electrical System

- ❑ Battery
- ❑ Battery heater
- ❑ Field-connection terminal block
- ❑ Relay kit: auxiliary run relay and common fault relay

Fuel System

- ❑ Gas strainer
- ❑ Braided stainless steel flexible fuel line

Maintenance

- ❑ Maintenance kit (air and oil filters)
- ❑ General maintenance literature kit
- ❑ Overhaul literature kit
- ❑ Production literature kit

Starting Aids

- ❑ Carburetor heater, 120 VAC (recommended for reliable starting at temperatures below 0°C [32°F])

Transfer Switch

- ❑ Kohler automatic transfer switch

Miscellaneous Accessories

- ❑ _____
- ❑ _____
- ❑ _____
- ❑ _____
- ❑ _____

Available Accessories

Model RDT Automatic Transfer Switch

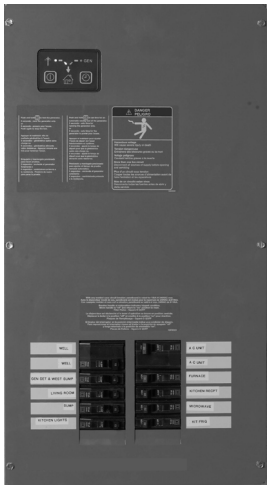

- UL listed
- 100, 200, or 400 amps
- 200 amp service entrance-rated model also available
- 240 VAC/60 Hz or 220 VAC/50 Hz
- Available with or without built-in load center
- Equipped with MPAC™ 500 microprocessor-based controls
- User-friendly controller interface with easy-to-read international symbols
- See specification sheet G11-98 for more information

Dimensions and Weights

Overall Size, L x W x H:	1123 x 726 x 804 mm (44.2 x 28.6 x 31.6 in.)
Weight:	182 kg (400 lb.)
Shipping weight:	195 kg (430 lb.)

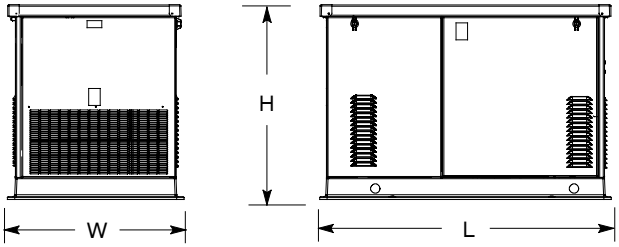

NOTE: These drawings are provided for reference only and should not be used for planning installation. Contact your local distributor for more detailed information.

DISTRIBUTED BY:

© 2003, 2004, 2005, 2006, 2007, 2008, 2009 by Kohler Co. All rights reserved.

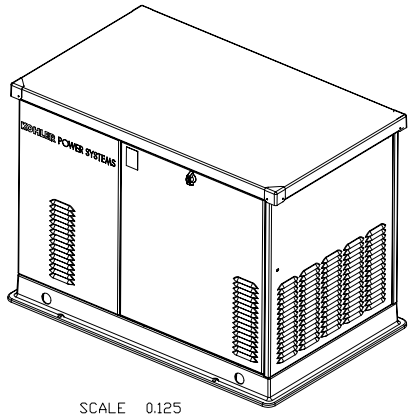

SCALE 0.125

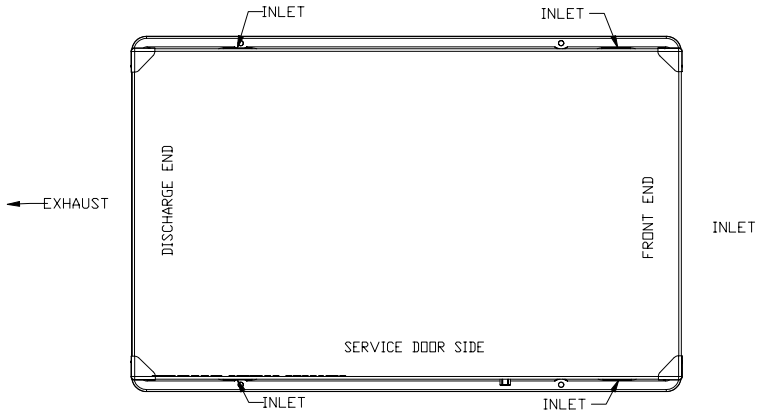

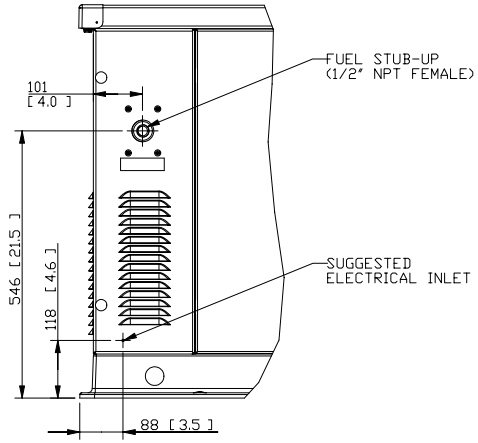

VIEW A-A

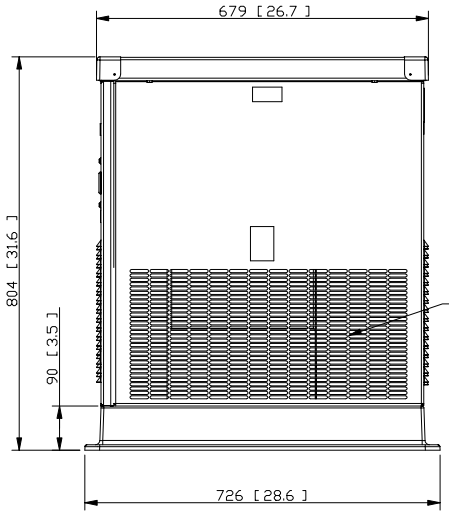

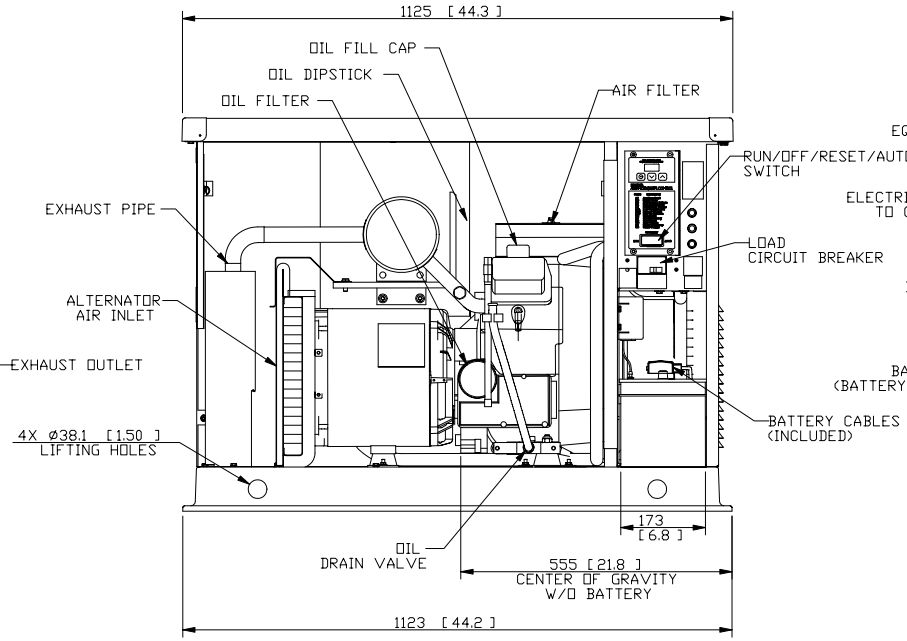

FRONT VIEW
(DOOR & SIDE PANEL
REMOVED TO SHOW DETAIL)

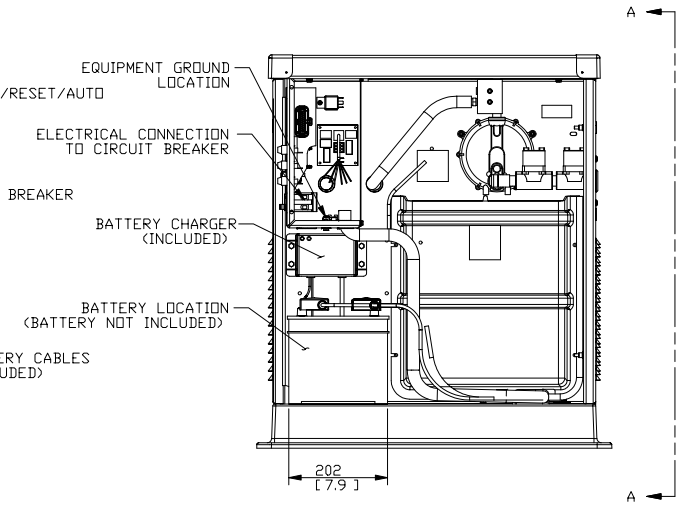

RS VIEW
(END PANEL REMOVED
TO SHOW DETAIL)

NOTE: DIMENSIONS IN [ ] ARE INCH EQUIVALENTS

WEIGHT W/O BATTERY: 182Kg [400LBS]

REV	DATE	REVISION	BY
F	12-16-05	SEE SHEET 2 OF 3. [76477]	GFR
G	10-30-06	SEE SHEET 3 OF 3. (A-7) 726 WAS 774 (C-7) 679 WAS 675 (B-8) 804 WAS 840 (A-8) 90 WAS 76 (A-6) Ø38.1 WAS Ø38 (A-4) 1123 WAS 1079 (A-4) 555 WAS 533 (A-2) 202 WAS 210 (C-2) 88 WAS 60 & 118 WAS 154 (D-3) 546 WAS 582 [79265]	GFR
H	5-7-07	(B-6) EXHAUST PIPE WAS EXHAUST PIPE W/ SPARK ARRESTOR (C-5) 1125 [44.3] WAS 1123 [44.2] [81075]	GFR

UNLESS OTHERWISE SPECIFIED - 1) DIMENSIONS ARE IN MILLIMETERS 2) TOLERANCES ARE:
X.XX ± 0.25
X.X ± 1.0
X ± 1.5
ANGLES ± 0° 30'
SURFACE FINISH MAX.
THIRD ANGLE PROJECTION

APPROVALS		DATE
DRAWN	MRS	5-20-03
CHECKED	AJB	5-20-03
APPROVED	AJB	5-20-03

KOHLER CO. METRIC PRO-E

POWER SYSTEMS, KOHLER, WI 53044 U.S.A.

THIS DRAWING IN DESIGN AND DETAIL IS KOHLER CO. PROPERTY AND MUST NOT BE USED EXCEPT IN CONNECTION WITH KOHLER CO. WORK. ALL RIGHTS OF DESIGN OR INVENTION ARE RESERVED.

TITLE: DIMENSION PRINT

SCALE .20X | CAD NO. | SHEET 1 OF 3

DWG NO. ADV-6823 | D

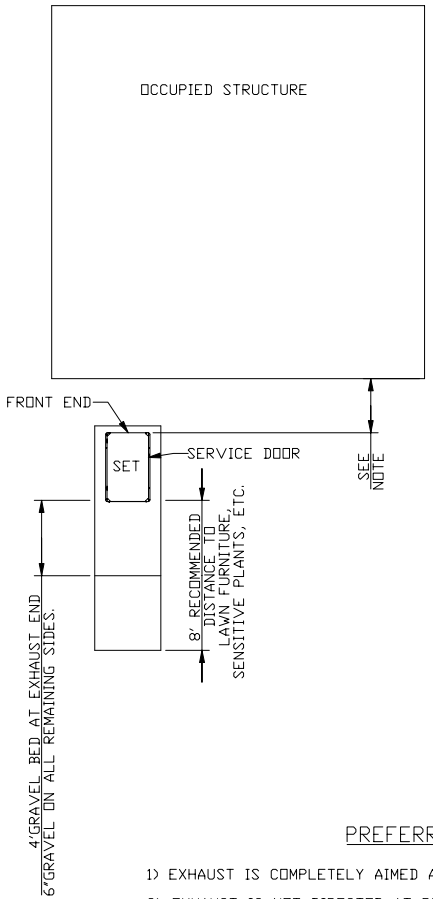

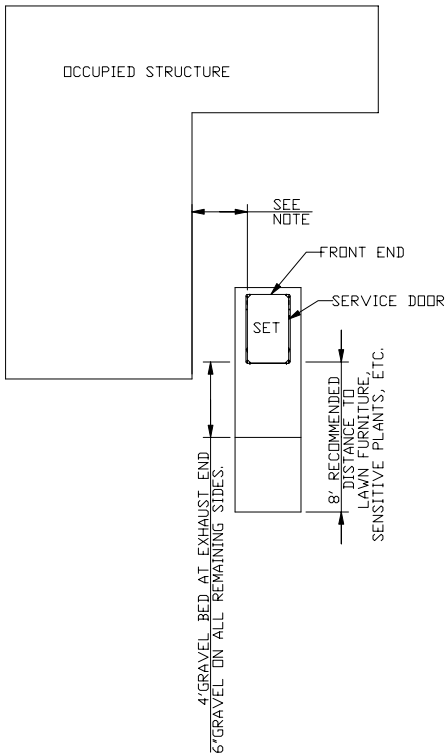

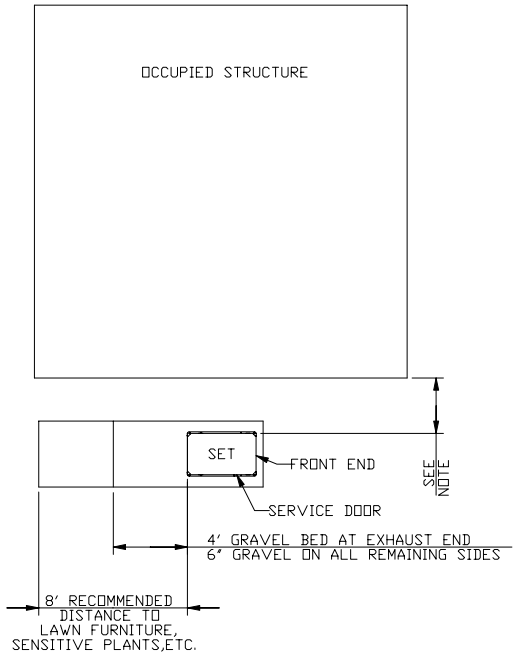

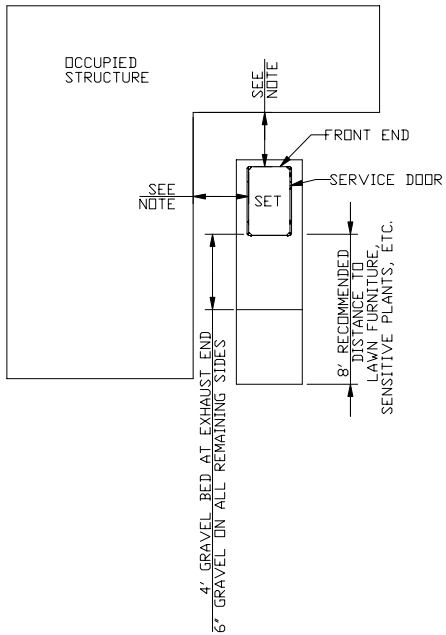

PREFERRED

1) EXHAUST IS COMPLETELY AIMED AWAY FROM THE STRUCTURE.
2) EXHAUST IS NOT DIRECTED AT PLAY AREAS, PATIOS OR OTHER AREAS WHERE PEOPLE CONGREGATE.
3) THE NEAREST WINDOW, VENT, DOOR OR SIMILAR STRUCTURE OPENING IS AT LEAST 5' FROM THE EXHAUST END OF THE SET.
4) SET HAS PROPER OFFSET FROM STRUCTURE.
5) WINDOWS & DOORS ON ADJACENT WALLS ARE CLOSED.
6) FURNACE AND OTHER SIMILAR INTAKES ARE AT LEAST 10' FROM EXHAUST END OF SET.
7) WEED BARRIER AND 3" THICK GRAVEL BASE LOCATED TO PREVENT GRASS & WEEDS FROM GROWING TOO CLOSE TO THE SET.
8) NO PLANTS, SHRUBS OR OTHER COMBUSTIBLES ALLOWED IN GRAVEL AREA.
9) SENSITIVE PLANTS, PATIO FURNITURE, ETC. ARE AT LEAST 8' FROM EXHAUST END OF SET.
10) REFER TO OWNERS MANUAL FOR OTHER INSTALLATION CONSTRAINTS.

NOTE:
THE RECOMMENDED DISTANCE FROM A STRUCTURE IS DEPENDENT ON STATE AND LOCAL CODES. NFPA 37, STANDARDS FOR THE INSTALLATION AND USE OF STATIONARY COMBUSTION ENGINES AND GAS TURBINES, STATES THIS DISTANCE SHOULD BE AT LEAST 5 FEET FROM A COMBUSTIBLE MATERIAL. FOR INSTALLATIONS NEAR NON-COMBUSTIBLE MATERIAL BE SURE TO LEAVE A MINIMUM DISTANCE OF 3 FEET TO ENSURE PROPER GENERATOR COOLING.

ACCEPTABLE

1) EXHAUST IS AIMED AWAY OR PARALLEL TO STRUCTURE.
2) EXHAUST IS NOT DIRECTED AT PLAY AREAS, PATIOS OR OTHER AREAS WHERE PEOPLE CONGREGATE.
3) THE NEAREST WINDOW, VENT, DOOR OR SIMILAR STRUCTURE OPENING IS AT LEAST 5' FROM THE EXHAUST END OF THE SET.
4) SET HAS PROPER OFFSET FROM STRUCTURE.
5) WINDOWS & DOORS ON ADJACENT WALLS ARE CLOSED.
6) FURNACE AND OTHER SIMILAR INTAKES ARE AT LEAST 10' FROM EXHAUST END OF SET.
7) WEED BARRIER AND 3" THICK GRAVEL BASE LOCATED TO PREVENT GRASS & WEEDS FROM GROWING TOO CLOSE TO THE SET.
8) NO PLANTS, SHRUBS OR OTHER COMBUSTIBLES ALLOWED IN GRAVEL AREA.
9) SENSITIVE PLANTS, PATIO FURNITURE, ETC. ARE AT LEAST 8' FROM EXHAUST END OF SET.
10) REFER TO OWNERS MANUAL FOR OTHER INSTALLATION CONSTRAINTS.

REV	DATE	REVISION	BY
F	12-16-05	(B-4) DISTANCE NOTE ADDED. (C-3,7) &	
		(D-1,5) SEE NOTE WAS 3 FT. [76477]	GFR
G	10-30-06	SEE SHEETS 1 & 3 OF 3 [79265]	GFR
H	5-7-07	SEE SHEET 1 OF 3 [81075]	GFR

UNLESS OTHERWISE SPECIFIED - 1) DIMENSIONS ARE IN MILLIMETERS 2) TOLERANCES ARE: X.XX ± 0.25, X.X ± 1.0, X ± 1.5, ANGLES ± 0° 30'. SURFACE FINISH 125 MAX.

THIRD ANGLE PROJECTION

APPROVALS		DATE
DRAWN	MRS	4-30-04
CHECKED	AJB	4-30-04
APPROVED	AJB	4-30-04

KOHLER CO. METRIC PRO-E

POWER SYSTEMS, KOHLER, WI 53044 U.S.A.

THIS DRAWING IN DESIGN AND DETAIL IS KOHLER CO. PROPERTY AND MUST NOT BE USED EXCEPT IN CONNECTION WITH KOHLER CO. WORK. ALL RIGHTS OF DESIGN OR INVENTION ARE RESERVED.

TITLE: DIMENSION PRINT

SCALE .20X | CAD NO. | SHEET 2 of 3

DWG NO. ADV-6823 | D

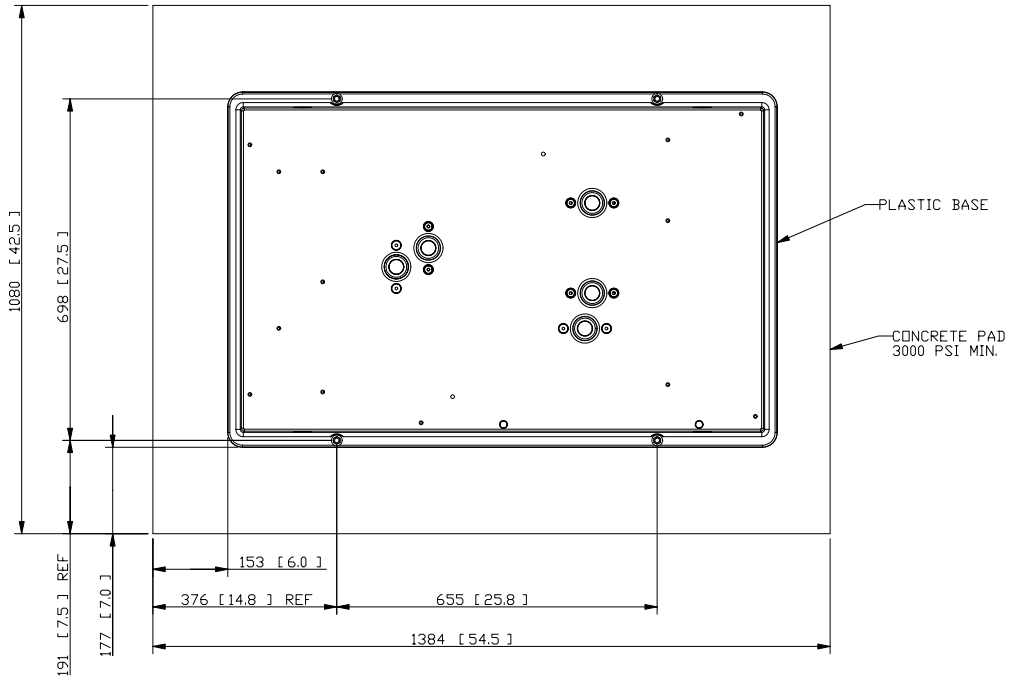

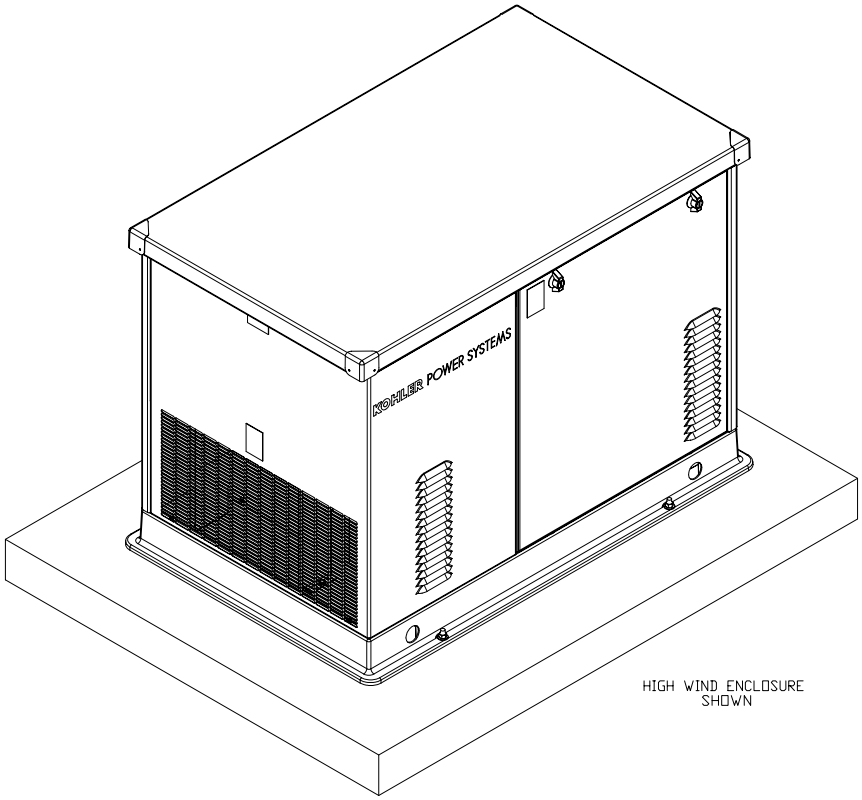

HIGH WIND ENCLOSURE
SHOWN

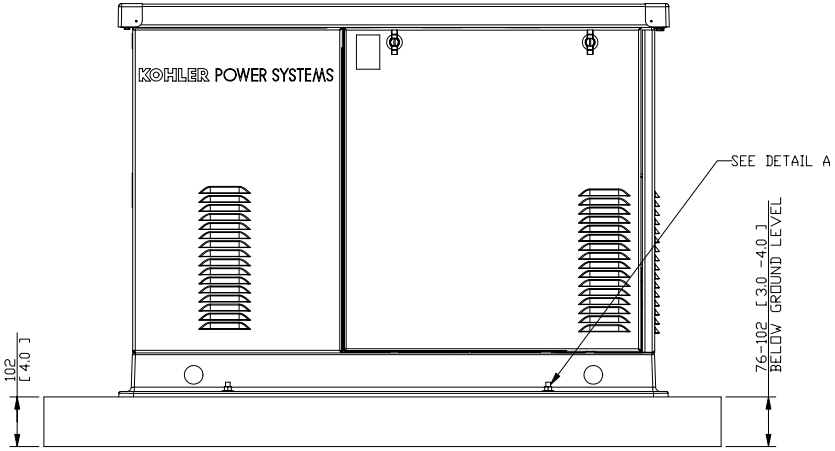

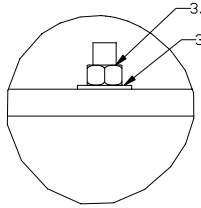

DETAIL A
(TYP. 4 PLACES)
SCALE 1.000

NOTE:
BOLTED CONNECTION REQUIREMENTS
SHEAR LOAD 150 LBS/ BOLT
PULL-OUT FORCE 200 LBS/BOLT

150 MPH - HIGH WIND
MOUNTING DETAIL

REV	DATE	REVISION	BY
F	12-16-05	SEE SHEET 2 OF 3. [76477]	GFR
G	10-30-06	SEE SHEET 1 OF 3 (C-8) 698 WAS 712, 191 REF WAS 184 REF & 177 WAS 153 (B-7) 376 REF WAS 259 REF (B-6) 655 WAS 867 (A-5) 76-102 WAS 76.1-101.6 (B-3) 1/2" WASHER REMOVED [79265]	GFR
H	5-7-07	SEE SHEET 1 OF 3 [81075]	GFR

UNLESS OTHERWISE SPECIFIED - 1) DIMENSIONS ARE IN MILLIMETERS 2) TOLERANCES ARE:
X.XX ± 0.25
X.X ± 1.0
X ± 1.5
ANGLES ± 0° 30'
SURFACE FINISH MAX.
THIRD ANGLE PROJECTION

APPROVALS		DATE
DRAWN	BTW	9-1-05
CHECKED	JMS	9-1-05
APPROVED	JJN	9-1-05

KOHLER CO. METRIC PRO-E
POWER SYSTEMS, KOHLER, WI 53044 U.S.A.

THIS DRAWING IN DESIGN AND DETAIL IS KOHLER CO. PROPERTY AND MUST NOT BE USED EXCEPT IN CONNECTION WITH KOHLER CO. WORK. ALL RIGHTS OF DESIGN OR INVENTION ARE RESERVED.

TITLE: DIMENSION PRINT

SCALE .2X | CAD NO. | SHEET 3 of 3

DWG NO. ADV-6823 | D

Kohler Power Systems 18Res Generator

Model: 18RES

KOHLER® POWER SYSTEMS

Residential Gas
Multi-Fuel LP Vapor/Natural Gas

ISO 9001 KOHLER POWER SYSTEMS NATIONALLY REGISTERED

The Kohler® Advantage

- **Powerful**
  Exclusive PowerBoost™ technology allows the Kohler 18 kW generator to start and run a typical 5 ton (60,000 BTU) central air conditioner, while still running other home appliances and electronics *
- **Cleaner Power for Sensitive Electronics**
  Protects sophisticated electronics with clean, stable power that exceeds strict utility requirements and IEEE standards for total harmonic distortion (THD)
- **Faster Response**
  Kohler® generators restore power in as little as 10 seconds
- **Quiet**
  Quiet operation: 68 dB(A) at 7 m (23 ft.) maintains neighborhood solitude
- **Premium Five-Year Limited Warranty**

Standard Features

- **ADC-RES Advanced Digital Control**
  - Designed for today's most sophisticated electronics
  - Electronic speed control responds quickly to varying household demand
  - Digital voltage regulation protects your sensitive electronics from harmonic distortion and unstable power quality
  - LED display shows system status and setup information
- **Engine Features**
  - Kohler Command PRO® OHV engine with hydraulic valve lifters for reliable performance without routine valve adjustment or lengthy break-in requirements
  - Simple field conversion between natural gas and LP vapor fuels while maintaining emission certification
  - Digital Spark Advance Ignition (DSAI) optimizes engine performance for natural gas and LP vapor fuels
  - Engine-mounted battery charging alternator
- **Designed for Easy Installation**
  - Polymer base eliminates the need for a concrete mounting pad, reducing installation time and cost
  - Fuel and electrical connections through the enclosure wall eliminate the need for stub-ups through the bottom
  - Load connection terminal block allows easy field wiring (optional)
  - Hinged roof with lockable latches
  - Designed for outdoor installation only
- **Certifications**
  - Meets emission regulations for U.S. Environmental Protection Agency (EPA) phase 2 small off-road engines and CA 2006 and later LSI engines with both LP vapor and natural gas
  - UL 2200 listed (60 Hz model)
  - CSA certification available (60 Hz model)
  - Approved for stationary standby applications in locations served by a reliable utility source

Generator Ratings

Model Series	Voltage	Phase	Hz	Alternator Model	Standby Amps		Standby Ratings, kW/kVA	
					Natural Gas	LP Gas	Natural Gas	LP Gas
18RES	120/240	1	60	2F5	70	75	17.0/17.0	18.0/18.0
18RES	115/230	1	50	2F5	60	60	14.0/14.0	14.0/14.0

RATINGS: Standby ratings apply to installations served by a reliable utility source. All single-phase units are rated at 1.0 power factor. The standby rating is applicable to variable loads with an average load factor of 80% for the duration of the power outage. No overload capacity is specified at this rating. Ratings are in accordance with ISO-3046/1, BS5514, AS2789, and DIN 6271. GENERAL GUIDELINES FOR DERATING: *ALTITUDE*: Derate 4% per 305 m (1000 ft.) elevation above 153 m (500 ft.). *TEMPERATURE*: Derate 1.5% per 5.5°C (10°F) temperature increase above 16°C (60°F). Availability is subject to change without notice. Kohler Co. reserves the right to change the design or specifications without notice and without any obligation or liability whatsoever. Contact your local Kohler Co. generator distributor for availability.

* Due to the cycling operation of many electrical appliances, the generator set may not run all appliances simultaneously. Check the appliance manufacturer's specifications for actual power requirements. Consult a Kohler® Power Systems professional for your exact residential power system requirements.

Application Data

Engine

Engine Specifications	60 Hz	50 Hz
Manufacturer	Kohler	
Engine: model, type	CH980 4 Cycle	
Cylinder arrangement	V-2	
Displacement, cc (cu. in.)	999 (61)	
Bore and stroke, mm (in.)	90 x 78.5 (3.54 x 3.1)	
Compression ratio	8.8:1	
Main bearings: quantity, type	2, Parent Material	
Rated rpm	3600	3000
Max. engine power at rated rpm, kW (HP)		
LP vapor	21.7 (29.1)	20.0 (26.8)
Natural gas	18.6 (25.0)	16.8 (22.5)
Cylinder head material	Aluminum	
Valve material	Steel/Stellite®	
Piston type and material	Aluminum Alloy	
Crankshaft material	Heat Treated, Ductile Iron	
Governor: type	Electronic	
Frequency regulation, no load to full load	Isochronous	
Frequency regulation, steady state	±0.5%	
Air cleaner type	Dry	

Engine Electrical

Engine Electrical System	
Ignition system	Electronic, DSAI
Starter motor rated voltage (DC)	12
Battery charger, ampere rating	15
Battery (purchased separately):	
Ground	Negative
Volts (DC)	12
Battery quantity	1
Recommended cold cranking amps (CCA) rating for -18°C (0°F)	525

Exhaust

Exhaust System	60 Hz	50 Hz
Exhaust flow at rated kW, m^3/min. (cfm)*	5.3 (187)	4.4 (155)
Exhaust temperature exiting enclosure at rated kW, °C (°F)	216 (420)	

* Flow rate using LP fuel

Lubrication

Lubricating System	
Type	Full Pressure
Oil capacity (with filter), L (qt.)	2.8 (3.0)
Oil filter: quantity, type	1, Cartridge
Oil cooler	Integral

Operation Requirements

Cooling Air	60 Hz	50 Hz
Total inlet air, m^3/min. (cfm)	30 (1045)	24 (848)
Cooling air, m^3/min. (cfm)	28 (989)	23 (798)
Combustion air, m^3/min. (cfm)	1.6 (57)	1.4 (50)

Fuel Requirements

Fuel System	
Fuel types	Natural Gas or LP Vapor
Fuel supply inlet	1/2 NPT
Fuel supply pressure, kPa (in. H_2O):	1.7-2.7 (7-11)

Minimum Gas Pipe Size Recommendation, in. NPT

Pipe Length, m (ft.)	Natural Gas (242,000 Btu/hr.)	LP Vapor (280,000 Btu/hr.)
8 (25)	1	3/4
15 (50)	1	1
30(100)	1 1/4	1
46(150)	1 1/4	1 1/4
61(200)	1 1/4	1 1/4

Fuel Consumption at % rated load

% Load	60 Hz		50 Hz	
Natural Gas, m^3/hr. (cfh)				
100%	6.9	(242)	5.7	(203)
75%	5.8	(204)	4.7	(167)
50%	4.4	(155)	3.8	(133)
25%	3.4	(120)	2.9	(103)
LP Vapor, m^3/hr. (cfh)				
100%	3.2	(112)	2.7	(94)
75%	2.7	(96)	2.2	(79)
50%	2.1	(74)	1.7	(62)
25%	1.6	(57)	1.4	(50)
LP Vapor, kg/hr. (lb./hr.)				
100%	5.9	(13.0)	5.0	(11.0)
75%	5.1	(11.2)	4.2	(9.3)
50%	3.9	(8.7)	3.3	(7.2)
25%	3.0	(6.6)	2.6	(5.8)

LP vapor conversion factors:
8.58 $ft.^3$ = 1 lb.
0.535 m^3 = 1 kg
36.39 $ft.^3$ = 1 gal.

Nominal fuel rating:
Natural gas: 37 MJ/m^3 (1000 Btu/$ft.^3$)
LP vapor: 93 MJ/m^3 (2500 Btu/$ft.^3$)

Alternator

Alternator Features

- Compliance with NEMA, IEEE, and ANSI standards for temperature rise
- Self-ventilated and dripproof construction
- Vacuum-impregnated windings with fungus-resistant epoxy varnish for dependability and long life
- Superior voltage waveform and minimum harmonic distortion from skewed alternator construction
- Digital voltage regulator with ±1.5% no-load to full-load RMS regulation
- Rotating-field alternator with static exciter for excellent load response
- Skewed generator construction produces a smooth AC waveform

Alternator Specifications

Specifications	PowerBoost™ Generator 1-Phase
Manufacturer	Kohler
Output reconnectable	120/240
Type	2-Pole, Rotating Field
Leads, quantity	4
Voltage regulator	Digital
Insulation:	NEMA MG1-1.66
Material	Class H
Temperature rise	Class H
Bearing: quantity, type	1, Sealed Ball
Coupling	Direct
Amortisseur windings	Full
Voltage regulation, no-load to full-load RMS	±1.5%
One-step load acceptance	100% of Rating
Peak motor starting kVA:	38

ADC-RES Controller

Controller Features

- Membrane keypad:
  - Arrow keys step through generator set status displays
  - Password-protected access to system configuration and adjustment menus
  - System voltage/frequency selection and engine configuration
  - Voltage, gain, and engine speed adjustment
- LED display:
  - Engine runtime, hours
  - Output voltage, VAC
  - Output frequency, Hz
  - Battery voltage, VDC
  - Crank cycle status
  - Setup information
  - Software version
  - Faults
- Faults displayed:
  - High battery voltage
  - High engine temperature
  - Low battery voltage
  - Low oil pressure
  - Overcrank
  - Overfrequency
  - Overspeed
  - Overvoltage
  - Underfrequency
  - Undervoltage
- Compact controller integrally mounted to the generator set
- Remote two-wire start/stop capability
- Digital isochronous governor to maintain steady-state speed at all loads
- Digital voltage regulation: ±1.5% RMS no-load to full-load
- Automatic start with programmed cranking cycle
- Field-upgradeable application software
- Front-access DB9 connector for software upgrade on the junction box
- Generator set master switch (Run/Off-Reset/Auto) on the junction box

KOHLER®
POWER SYSTEMS

KOHLER CO., Kohler, Wisconsin 53044 USA
Phone 920-565-3381, Fax 920-459-1646
For the nearest sales and service outlet in the US and Canada, phone 1-800-544-2444
KohlerPower.com

Standard Features

- ADC-RES Advanced Digital Control
- Battery cables
- CARB- and EPA-certified fuel system
- Critical silencer
- Field-connection terminal block
- Fuel solenoid valve and secondary regulator
- Multi-fuel system, LP vapor/natural gas, field-convertible
- Oil drain extension with shutoff valve
- Polymer base
- Rodent-resistant construction
- Sound-deadening, flame-retardant foam per UL 94, class HF-1
- Sound enclosure, quiet 68 dB(A) operation
- Premium 5-year limited warranty
- 6-amp battery charger
- 80-amp line circuit breaker

Available Accessories

Certifications

❑ CSA Certification (60 Hz only)

Communication Accessories

❑ OnCue™ Home Generator Management System

Electrical System

❑ Battery
❑ Battery heater
❑ Relay kit: auxiliary run relay and common fault relay

Fuel System

❑ Gas strainer
❑ Braided stainless steel flexible fuel line

Maintenance

❑ Maintenance kit (air and oil filters)
❑ General maintenance literature kit
❑ Overhaul literature kit
❑ Production literature kit

Starting Aids

❑ Carburetor heater, 120 VAC (recommended for reliable starting at temperatures below 0°C [32°F])

Transfer Switch

❑ Kohler automatic transfer switch

Miscellaneous Accessories

❑ _____
❑ _____
❑ _____
❑ _____
❑ _____

Available Accessories

Model RDT Automatic Transfer Switch

- UL listed
- 100, 200, or 400 amps
- 200 amp service entrance-rated model also available
- 240 VAC/60 Hz or 220 VAC/50 Hz
- Available with or without built-in load center
- Equipped with MPAC™ 500 microprocessor-based controls
- User-friendly controller interface with easy-to-read international symbols
- See specification sheet G11-98 for more information

Dimensions and Weights

Overall Size, L x W x H:	1199 x 726 x 804 mm (47.2 x 28.6 x 31.6 in.)
Weight:	227 kg (500 lb.)
Shipping weight:	236 kg (520 lb.)

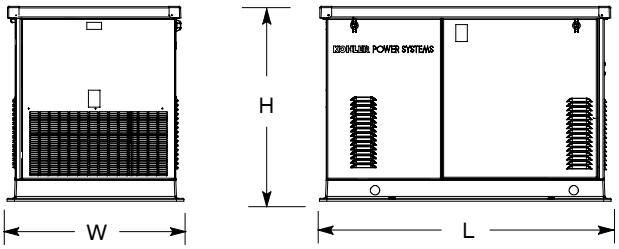

NOTE: This drawing is provided for reference only and should not be used for planning installation. Contact your local distributor for more detailed information.

DISTRIBUTED BY:

© 2009 by Kohler Co. All rights reserved.

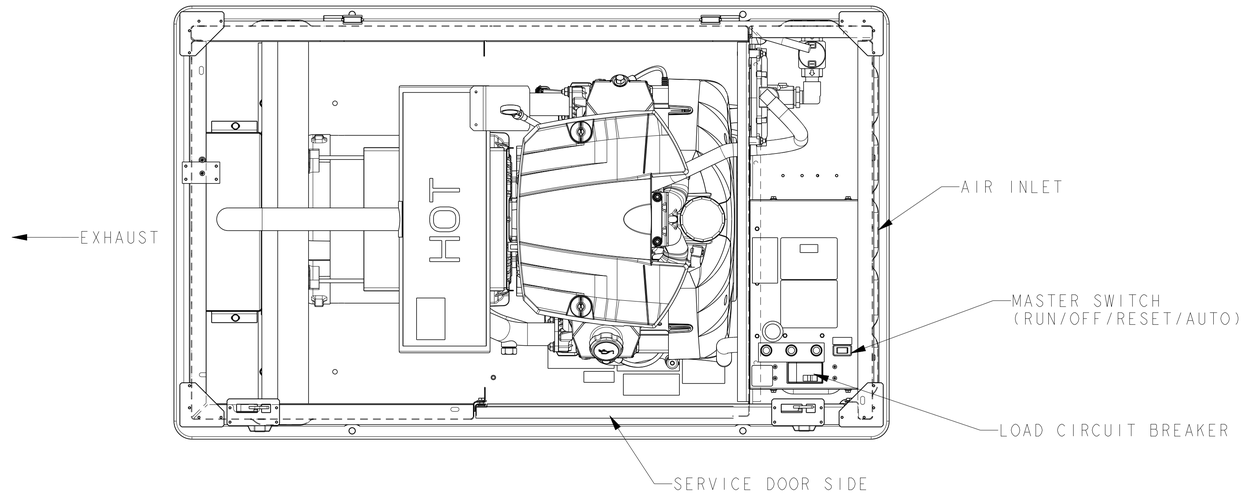

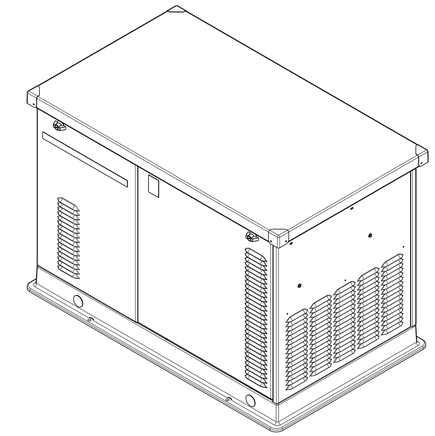

SCALE 0.100

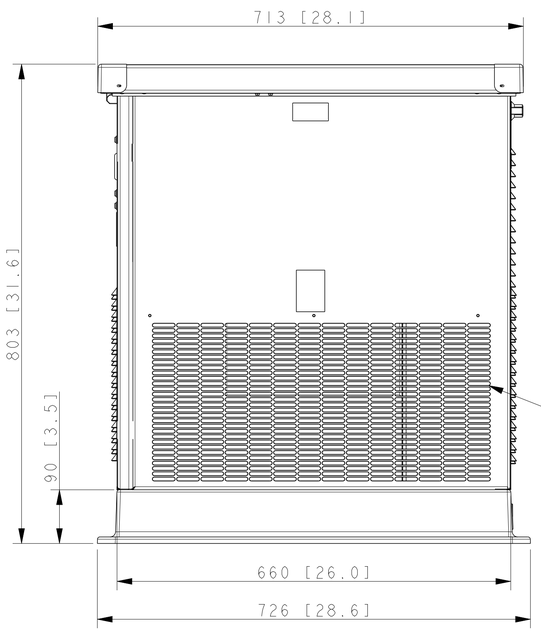

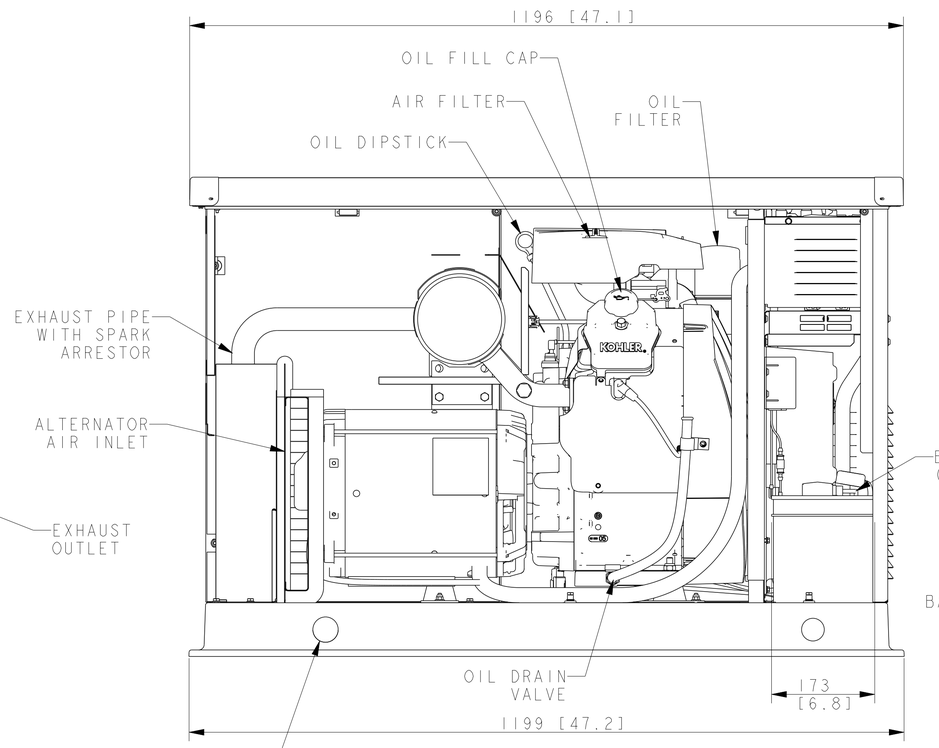

SERVICE DOOR SIDE VIEW
(DOOR & REAR PANEL
REMOVED TO SHOW DETAIL)

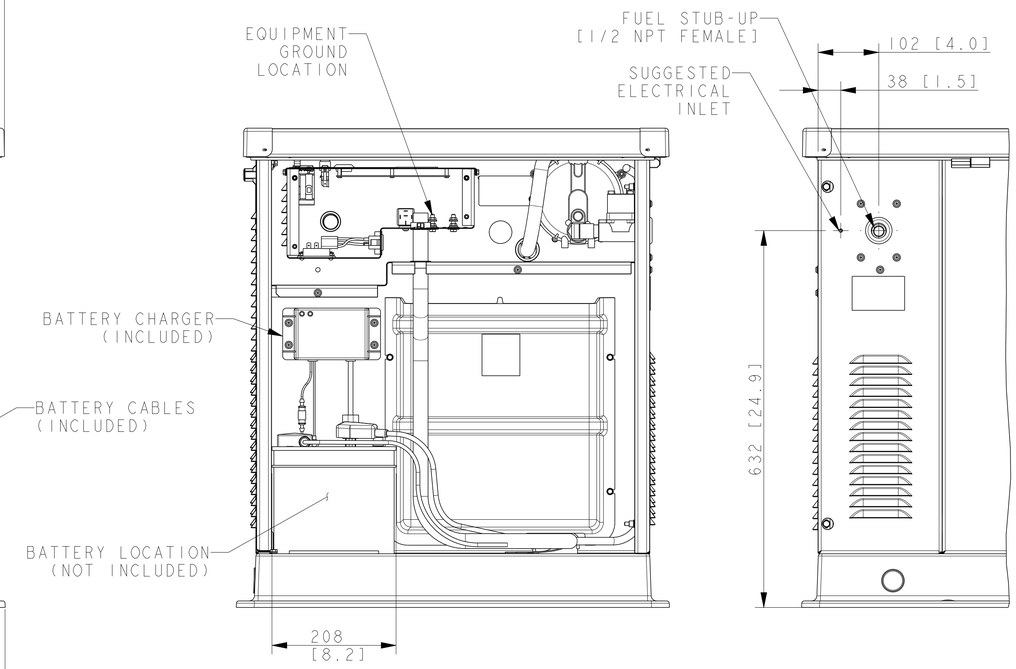

FRONT VIEW
(END PANEL REMOVED
TO SHOW DETAIL)

NOTES
DIMENSIONS IN [] ARE INCH EQUIVALENTS.

18RES
17RES

REV	DATE	ON COMPOSITE DWGS, SEE PART NO. FOR REVISION LEVEL	BY
-	1-8-07	NEW DRAWING [801115]	DDH
A	8-23-07	VIEWS & DIMENSIONS REVISED TO REFLECT NEW ROOF & BASE.[833335]	MRS
B	9-13-07	(B-1) ELECTRICAL INLET RELOCATED [83706]	MRS
C	6-9-09	(A-8) 726 [28.6] DIMENSION ADDED; (A-4) 18RES ADDED TO NOTE [877112]	DDH

UNLESS OTHERWISE SPECIFIED: -
1) DIMENSIONS ARE IN MILLIMETERS
2) TOLERANCES ARE:
X.XX ±
X.X ±
X ±
ANGLES ±
SURFACE FINISH MAX.
THIRD ANGLE PROJECTION

APPROVALS		DATE
DRAWN	DDH	1-8-07
CHECKED	DDH	1-8-07
APPROVED	JJN	1-8-07

KOHLER CO. METRIC PRO-E

POWER SYSTEMS, KOHLER, WI 53044 U.S.A.

THIS DRAWING IN DESIGN AND DETAIL IS KOHLER CO. PROPERTY AND MUST NOT BE USED EXCEPT IN CONNECTION WITH KOHLER CO. WORK. ALL RIGHTS OF DESIGN OR INVENTION ARE RESERVED.

TITLE
DIMENSION PRINT, 17RES

SCALE 0.20 | CAD NO. | SHEET 1 of 2

DWG NO. ADV-7341 | D

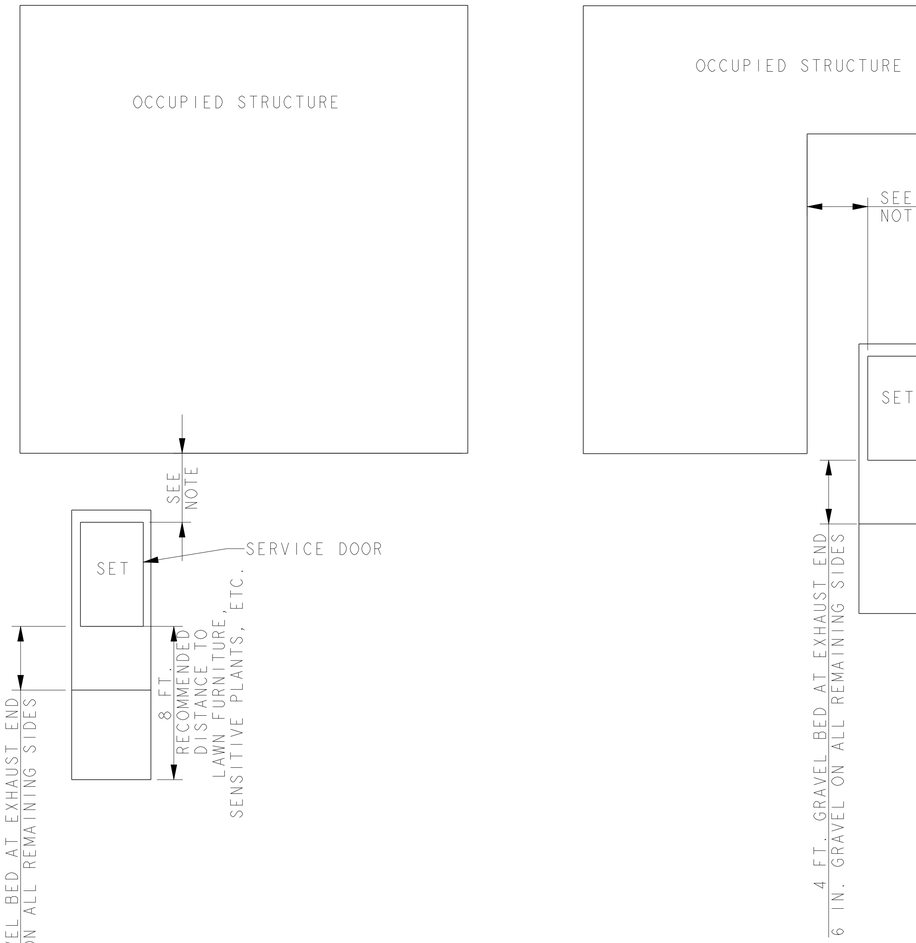

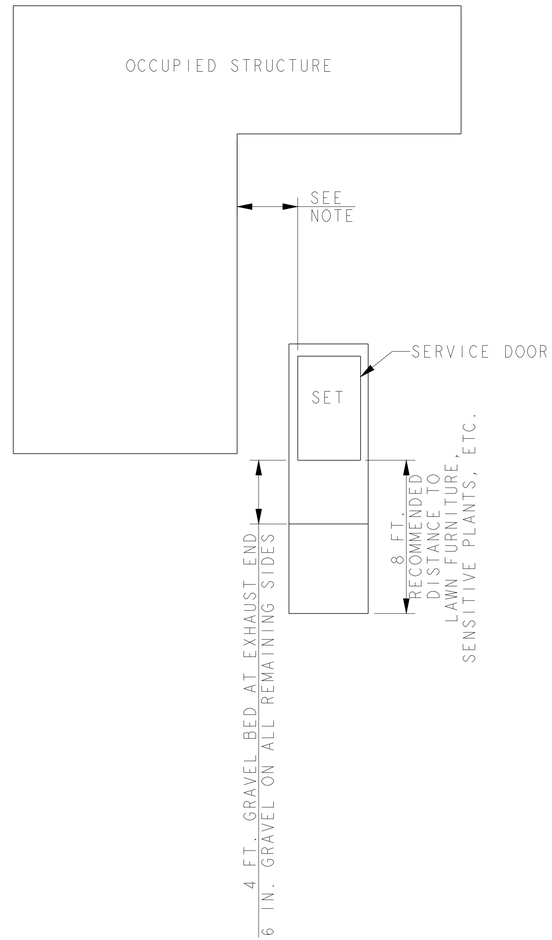

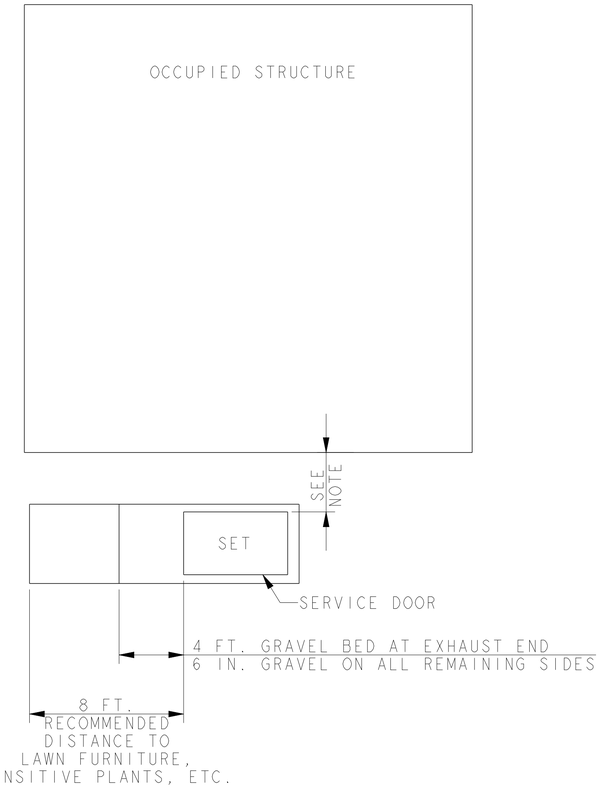

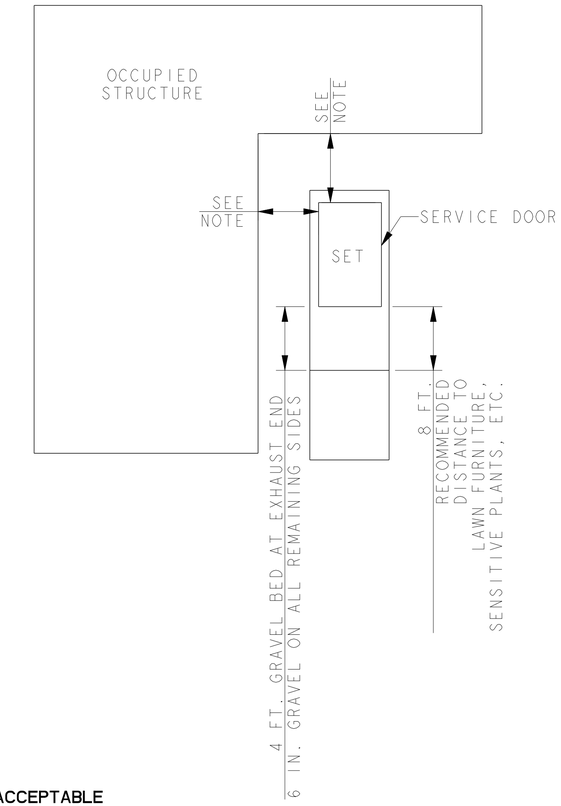

PREFERRED

1) EXHAUST IS COMPLETELY AIMED AWAY FROM THE STRUCTURE.
2) EXHAUST IS NOT DIRECTED AT PLAY AREAS, PATIOS OR OTHER AREAS WHERE PEOPLE CONGREGATE.
3) THE NEAREST WINDOW, VENT, DOOR OR SIMILAR STRUCTURE OPENING IS AT LEAST 5 FEET FROM THE EXHAUST END OF THE SET.
4) SET HAS PROPER OFFSET FROM STRUCTURE.
5) WINDOWS & DOORS ON ADJACENT WALLS ARE CLOSED.
6) FURNACE AND OTHER SIMILAR INTAKES ARE AT LEAST 10 FEET FROM EXHAUST END OF SET.
7) WEED BARRIER AND 3 INCH THICK GRAVEL BASE LOCATED TO PREVENT GRASS & WEEDS FROM GROWING TOO CLOSE TO THE SET.
8) NO PLANTS, SHRUBS OR OTHER COMBUSTIBLES ALLOWED IN GRAVEL AREA.
9) SENSITIVE PLANTS, PATIO FURNITURE, ETC. ARE AT LEAST 8 FEET FROM EXHAUST END OF SET.
10) REFER TO OWNERS MANUAL FOR OTHER INSTALLATION CONSTRAINTS.

NOTE:
THE RECOMMENDED DISTANCE FROM A STRUCTURE IS DEPENDENT ON STATE AND LOCAL CODES. NFPA 37, STANDARDS FOR THE INSTALLATION AND USE OF STATIONARY COMBUSTION ENGINES AND GAS TURBINES, STATES THIS DISTANCE SHOULD BE AT LEAST 5 FEET FROM A COMBUSTIBLE MATERIAL. FOR INSTALLATIONS NEAR NON-COMBUSTIBLE MATERIAL BE SURE TO LEAVE A MINIMUM DISTANCE OF 3 FEET TO ENSURE PROPER GENERATOR COOLING.

ACCEPTABLE

1) EXHAUST IS AIMED AWAY OR PARALLEL TO STRUCTURE.
2) EXHAUST IS NOT DIRECTED AT PLAY AREAS, PATIOS OR OTHER AREAS WHERE PEOPLE CONGREGATE.
3) THE NEAREST WINDOW, VENT, DOOR OR SIMILAR STRUCTURE OPENING IS AT LEAST 5 FEET FROM THE EXHAUST END OF THE SET.
4) SET HAS PROPER OFFSET FROM STRUCTURE.
5) WINDOWS & DOORS ON ADJACENT WALLS ARE CLOSED.
6) FURNACE AND OTHER SIMILAR INTAKES ARE AT LEAST 10 FEET FROM EXHAUST END OF SET.
7) WEED BARRIER AND 3 INCH THICK GRAVEL BASE LOCATED TO PREVENT GRASS & WEEDS FROM GROWING TOO CLOSE TO THE SET.
8) NO PLANTS, SHRUBS OR OTHER COMBUSTIBLES ALLOWED IN GRAVEL AREA.
9) SENSITIVE PLANTS, PATIO FURNITURE, ETC. ARE AT LEAST 8 FEET FROM EXHAUST END OF SET.
10) REFER TO OWNERS MANUAL FOR OTHER INSTALLATION CONSTRAINTS.

REV	DATE	ON COMPOSITE DWGS, SEE PART NO. FOR REVISION LEVEL	BY
-	1-8-07	NEW DRAWING [80115]	DDH
A	8-23-07	SEE SHEET 1 [83335]	MRS
B	9-13-07	SEE SHEET 1 [83706]	MRS
C	6-9-09	(A-4) 17RES WAS 16RES & 18RES ADDED [87712]	DDH

18RES
17RES

UNLESS OTHERWISE SPECIFIED: - 1) DIMENSIONS ARE IN MILLIMETERS 2) TOLERANCES ARE: X.XX ± X.X ± X ± ANGLES ± SURFACE FINISH MAX. THIRD ANGLE PROJECTION

APPROVALS		DATE
DRAWN	DDH	1-8-07
CHECKED	DDH	1-8-07
APPROVED	JJN	1-8-07

KOHLER CO. METRIC | PRO-E

POWER SYSTEMS, KOHLER, WI 53044 U.S.A.

THIS DRAWING IN DESIGN AND DETAIL IS KOHLER CO. PROPERTY AND MUST NOT BE USED EXCEPT IN CONNECTION WITH KOHLER CO. WORK. ALL RIGHTS OF DESIGN OR INVENTION ARE RESERVED.

TITLE: DIMENSION PRINT, 17RES

SCALE 0.03 | CAD NO. | SHEET 2 of 2

DWG NO. ADV-7341 | D

Kohler Residential/Commercial Generator Sets Operation Manual

Operation

Residential/Commercial Generator Sets

Models:

8.5/12/17/18RES

12/18TRES

Controller:

Advanced Digital Control ADC-RES

ISO 9001 KOHLER POWER SYSTEMS NATIONALLY REGISTERED

KOHLER® POWER SYSTEMS

TP-6515 9/09d

California Proposition 65

⚠ WARNING

Engine exhaust from this product contains chemicals known to the State of California to cause cancer, birth defects, or other reproductive harm.

Product Identification Information

Product identification numbers determine service parts. Record the product identification numbers in the spaces below immediately after unpacking the products so that the numbers are readily available for future reference. Record field-installed kit numbers after installing the kits.

Generator Set Identification Numbers

Record the product identification numbers from the generator set nameplate(s).

Model Designation _____

Specification Number _____

Serial Number _____

Accessory Number	Accessory Description

Controller Identification

Record the controller description from the generator set operation manual, spec sheet, or sales invoice.

Controller Description _____

Engine Identification

Record the product identification information from the engine nameplate.

Manufacturer _____

Model Designation _____

Serial Number _____

Table of Contents

Product Identification Information 2

Safety Precautions and Instructions 5

Introduction 9

Service Assistance 11

Section 1 Specifications 13
- 1.1 Introduction 13
- 1.2 Generator 13
- 1.3 Engine 13
- 1.4 Advanced Digital Control 13
- 1.5 Service Views for Maintenance 14

Section 2 Operation 17
- 2.1 Prestart Checklist 17
- 2.2 Exercising Generator Set 17
- 2.3 ADC-RES Controls and Indicators 17
  - 2.3.1 LED Display 17
  - 2.3.2 Controller Keypad 18
  - 2.3.3 Generator Set Master Switch 18
- 2.4 Controller Power 19
  - 2.4.1 Standby Mode 19
  - 2.4.2 Sleep Mode 19
- 2.5 Generator Set Operation 19
  - 2.5.1 Starting Generator Set 19
  - 2.5.2 Stopping Generator Set 19
  - 2.5.3 Resetting Emergency Stop Switch (TRES Models only) 20
- 2.6 Faults 21
  - 2.6.1 Shutdowns 21
  - 2.6.2 Warnings 21
  - 2.6.3 Resetting Controller after a Fault Shutdown 21
- 2.7 Battery Charger 23
  - 2.7.1 RES Battery Charger 23
  - 2.7.2 TRES Battery Charger 24

Section 3 Scheduled Maintenance 25
- 3.1 Scheduled Maintenance 25
  - 3.1.1 Service Schedule, 8.5/12 kW Models 26
  - 3.1.2 Service Schedule, 17/18 kW Models 27
- 3.2 Lubrication System 28
  - 3.2.1 Low Oil Pressure Shutdown 28
  - 3.2.2 Oil Check 28
  - 3.2.3 Engine Oil Recommendation 28
  - 3.2.4 Oil Change Procedure 28
  - 3.2.5 Oil Cooler (17/18 kW) 29
- 3.3 Spark Plugs 30
- 3.4 Air Cleaner Service 30
  - 3.4.1 Air Cleaner, 8.5/12 kW Models 30
  - 3.4.2 Air Cleaner, 17/18 kW Models 31
- 3.5 Cooling System 32
- 3.6 Exhaust System 32
- 3.7 Battery 33
- 3.8 Battery Charger 33
- 3.9 Circuit Protection 34
  - 3.9.1 Line Circuit Breaker 34
  - 3.9.2 Fuses 34

Table of Contents, continued

3.10 Storage Procedure 35
3.10.1 Lubricating System 35
3.10.2 Fuel System 35
3.10.3 Cylinder Lubrication 35
3.10.4 Exterior Preparation 35
3.10.5 Battery 35

Section 4 Troubleshooting 37
4.1 Introduction 37
4.2 Controller Troubleshooting 37
4.3 Generator Set Troubleshooting 37
4.4 Battery Charger Troubleshooting 39

Appendix A Abbreviations 41

IMPORTANT SAFETY INSTRUCTIONS. Electromechanical equipment, including generator sets, transfer switches, switchgear, and accessories, can cause bodily harm and pose life-threatening danger when improperly installed, operated, or maintained. To prevent accidents be aware of potential dangers and act safely. Read and follow all safety precautions and instructions. SAVE THESE INSTRUCTIONS.

This manual has several types of safety precautions and instructions: Danger, Warning, Caution, and Notice.

DANGER

Danger indicates the presence of a hazard that ***will cause severe personal injury, death***, or ***substantial property damage***.

WARNING

Warning indicates the presence of a hazard that ***can cause severe personal injury, death,*** or ***substantial property damage***.

CAUTION

Caution indicates the presence of a hazard that ***will*** or ***can cause minor personal injury*** or ***property damage***.

NOTICE

Notice communicates installation, operation, or maintenance information that is safety related but not hazard related.

Safety decals affixed to the equipment in prominent places alert the operator or service technician to potential hazards and explain how to act safely. The decals are shown throughout this publication to improve operator recognition. Replace missing or damaged decals.

Accidental Starting

WARNING

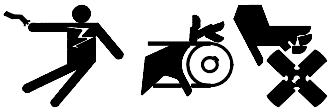

Accidental starting.
Can cause severe injury or death.

Disconnect the battery cables before working on the generator set. Remove the negative (-) lead first when disconnecting the battery. Reconnect the negative (-) lead last when reconnecting the battery.

Disabling the generator set. Accidental starting can cause severe injury or death. Before working on the generator set or connected equipment, disable the generator set as follows: (1) Move the generator set master switch to the OFF position. (2) Disconnect the power to the battery charger. (3) Remove the battery cables, negative (-) lead first. Reconnect the negative (-) lead last when reconnecting the battery. Follow these precautions to prevent starting of the generator set by an automatic transfer switch, remote start/stop switch, or engine start command from a remote computer.

Battery

WARNING

Sulfuric acid in batteries.
Can cause severe injury or death.

Wear protective goggles and clothing. Battery acid may cause blindness and burn skin.

WARNING

Explosion.
Can cause severe injury or death.
Relays in the battery charger cause arcs or sparks.

Locate the battery in a well-ventilated area. Isolate the battery charger from explosive fumes.

Battery electrolyte is a diluted sulfuric acid. Battery acid can cause severe injury or death. Battery acid can cause blindness and burn skin. Always wear splashproof safety goggles, rubber gloves, and boots when servicing the battery. Do not open a sealed battery or mutilate the battery case. If battery acid splashes in the eyes or on the skin, immediately flush the affected area for 15 minutes with large quantities of clean water. Seek immediate medical aid in the case of eye contact. Never add acid to a battery after placing the battery in service, as this may result in hazardous spattering of battery acid.

Battery acid cleanup. Battery acid can cause severe injury or death. Battery acid is electrically conductive and corrosive. Add 500 g (1 lb.) of bicarbonate of soda (baking soda) to a container with 4 L (1 gal.) of water and mix the neutralizing solution. Pour the neutralizing solution on the spilled battery acid and continue to add the neutralizing solution to the spilled battery acid until all evidence of a chemical reaction (foaming) has ceased. Flush the resulting liquid with water and dry the area.

Battery gases. Explosion can cause severe injury or death. Battery gases can cause an explosion. Do not smoke or permit flames or sparks to occur near a battery at any time, particularly when it is charging. Do not dispose of a battery in a fire. To prevent burns and sparks that could cause an explosion, avoid touching the battery terminals with tools or other metal objects. Remove all jewelry before servicing the equipment. Discharge static electricity from your body before touching batteries by first touching a grounded metal surface away from the battery. To avoid sparks, do not disturb the battery charger connections while the battery is charging. Always turn the battery charger off before disconnecting the battery connections. Ventilate the compartments containing batteries to prevent accumulation of explosive gases.

Battery short circuits. Explosion can cause severe injury or death. Short circuits can cause bodily injury and/or equipment damage. Disconnect the battery before generator set installation or maintenance. Remove all jewelry before servicing the equipment. Use tools with insulated handles. Remove the negative (-) lead first when disconnecting the battery. Reconnect the negative (-) lead last when reconnecting the battery. Never connect the negative (-) battery cable to the positive (+) connection terminal of the starter solenoid. Do not test the battery condition by shorting the terminals together.

Engine Backfire/Flash Fire

⚠ WARNING

Fire.
Can cause severe injury or death.

Do not smoke or permit flames or sparks near fuels or the fuel system.

Servicing the air cleaner. A sudden backfire can cause severe injury or death. Do not operate the generator set with the air cleaner removed.

Servicing the fuel system. A flash fire can cause severe injury or death. Do not smoke or permit flames or sparks near the carburetor, fuel line, fuel filter, fuel pump, or other potential sources of spilled fuels or fuel vapors. Catch fuels in an approved container when removing the fuel line or carburetor.

Combustible materials. A fire can cause severe injury or death. Generator set engine fuels and fuel vapors are flammable and explosive. Handle these materials carefully to minimize the risk of fire or explosion. Equip the compartment or nearby area with a fully charged fire extinguisher. Select a fire extinguisher rated ABC or BC for electrical fires or as recommended by the local fire code or an authorized agency. Train all personnel on fire extinguisher operation and fire prevention procedures.

Exhaust System

⚠ WARNING

Carbon monoxide.
Can cause severe nausea, fainting, or death.

The exhaust system must be leakproof and routinely inspected.

Generator set operation. Carbon monoxide can cause severe nausea, fainting, or death. Carbon monoxide is an odorless, colorless, tasteless, nonirritating gas that can cause death if inhaled for even a short time. Avoid breathing exhaust fumes when working on or near the generator set. Never operate the generator set inside a building. Never operate the generator set where exhaust gas could seep inside or be drawn into a potentially occupied building through windows, air intake vents, or other openings.

Carbon monoxide symptoms. Carbon monoxide can cause severe nausea, fainting, or death. Carbon monoxide is a poisonous gas present in exhaust gases. Carbon monoxide is an odorless, colorless, tasteless, nonirritating gas that can cause death if inhaled for even a short time. Carbon monoxide poisoning symptoms include but are not limited to the following:

- Light-headedness, dizziness
- Physical fatigue, weakness in joints and muscles
- Sleepiness, mental fatigue, inability to concentrate or speak clearly, blurred vision
- Stomachache, vomiting, nausea

If experiencing any of these symptoms and carbon monoxide poisoning is possible, seek fresh air immediately and remain active. Do not sit, lie down, or fall asleep. Alert others to the possibility of carbon monoxide poisoning. Seek medical attention if the condition of affected persons does not improve within minutes of breathing fresh air.

Fuel System

⚠ WARNING

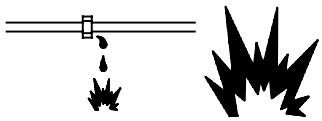

Explosive fuel vapors.
Can cause severe injury or death.

Use extreme care when handling, storing, and using fuels.

Gas fuel leaks. Explosive fuel vapors can cause severe injury or death. Fuel leakage can cause an explosion. Check the LP vapor gas or natural gas fuel system for leakage by using a soap and water solution with the fuel system test pressurized to 6-8 ounces per square inch (10-14 inches water column). Do not use a soap solution containing either ammonia or chlorine because both prevent bubble formation. A successful test depends on the ability of the solution to bubble.

Hazardous Noise

⚠ CAUTION

Hazardous noise.
Can cause hearing loss.

Never operate the generator set without a muffler or with a faulty exhaust system.

Engine noise. Hazardous noise can cause hearing loss. Generator sets not equipped with sound enclosures can produce noise levels greater than 105 dBA. Prolonged exposure to noise levels greater than 85 dBA can cause permanent hearing loss. Wear hearing protection when near an operating generator set.

Hazardous Voltage/ Moving Parts

⚠ WARNING

Hazardous voltage. Moving parts.
Can cause severe injury or death.

Operate the generator set only when all guards and electrical enclosures are in place.

⚠ WARNING

Hazardous voltage.
Backfeed to the utility system can cause property damage, severe injury, or death.

If the generator set is used for standby power, install an automatic transfer switch to prevent inadvertent interconnection of standby and normal sources of supply.

⚠ CAUTION

Welding the generator set.
Can cause severe electrical equipment damage.

Never weld components of the generator set without first disconnecting the battery, controller wiring harness, and engine electronic control module (ECM).

Grounding electrical equipment. Hazardous voltage can cause severe injury or death. Electrocution is possible whenever electricity is present. Ensure you comply with all applicable codes and standards. Electrically ground the generator set, transfer switch, and related equipment and electrical circuits. Turn off the main circuit breakers of all power sources before servicing the equipment. Never contact electrical leads or appliances when standing in water or on wet ground because these conditions increase the risk of electrocution.

Welding on the generator set. Can cause severe electrical equipment damage. Before welding on the generator set perform the following steps: (1) Remove the battery cables, negative (-) lead first. (2) Disconnect all engine electronic control module (ECM) connectors. (3) Disconnect all generator set controller and voltage regulator circuit board connectors. (4) Disconnect the engine battery-charging alternator connections. (5) Attach the weld ground connection close to the weld location.

Connecting the battery and the battery charger. Hazardous voltage can cause severe injury or death. Reconnect the battery correctly, positive to positive and negative to negative, to avoid electrical shock and damage to the battery charger and battery(ies). Have a qualified electrician install the battery(ies).

Short circuits. Hazardous voltage/current can cause severe injury or death. Short circuits can cause bodily injury and/or equipment damage. Do not contact electrical connections with tools or jewelry while making adjustments or repairs. Remove all jewelry before servicing the equipment.

Electrical backfeed to the utility. Hazardous backfeed voltage can cause severe injury or death. Install a transfer switch in standby power installations to prevent the connection of standby and other sources of power. Electrical backfeed into a utility electrical system can cause severe injury or death to utility personnel working on power lines.

⚠ WARNING

Airborne particles.
Can cause severe injury or blindness.

Wear protective goggles and clothing when using power tools, hand tools, or compressed air.

Heavy Equipment

⚠ WARNING

Unbalanced weight.
Improper lifting can cause severe injury or death and equipment damage.

Do not use lifting eyes.
Lift the generator set using lifting bars inserted through the lifting holes on the skid.

Hot Parts

⚠ WARNING

Hot engine and exhaust system. Can cause severe injury or death.

Do not work on the generator set until it cools.

Servicing the exhaust system. Hot parts can cause severe injury or death. Do not touch hot engine parts. The engine and exhaust system components become extremely hot during operation.

Servicing the engine heater. Hot parts can cause minor personal injury or property damage. Install the heater before connecting it to power. Operating the heater before installation can cause burns and component damage. Disconnect power to the heater and allow it to cool before servicing the heater or nearby parts.

Notice

NOTICE

Canadian installations only. For standby service connect the output of the generator set to a suitably rated transfer switch in accordance with Canadian Electrical Code, Part 1.

This manual provides operation and maintenance instructions for residential/commercial generator sets equipped with ADC-RES controls. The generator set models covered by this manual are listed on the front cover.

This generator set is approved for use in stationary applications in locations served by a reliable utility power source. Have the generator set installed by an authorized distributor/dealer or service technician. Refer to TP-6514, Installation Manual, for installation instructions.

Information in this publication represents data available at the time of print. Kohler Co. reserves the right to change this publication and the products represented without notice and without any obligation or liability whatsoever.

Read this manual and carefully follow all procedures and safety precautions to ensure proper equipment operation and to avoid bodily injury. Read and follow the Safety Precautions and Instructions section at the beginning of this manual. Keep this manual with the equipment for future reference.

The equipment service requirements are very important to safe and efficient operation. Inspect the parts often and perform required service at the prescribed intervals. Obtain service from an authorized service distributor/dealer to keep equipment in top condition.

Nameplate

The following illustration shows a typical generator set nameplate. Copy the model, serial, and specification numbers from the nameplate into the spaces provided in the product information section on the inside front cover of this manual. See Section 1.5 for the nameplate location.

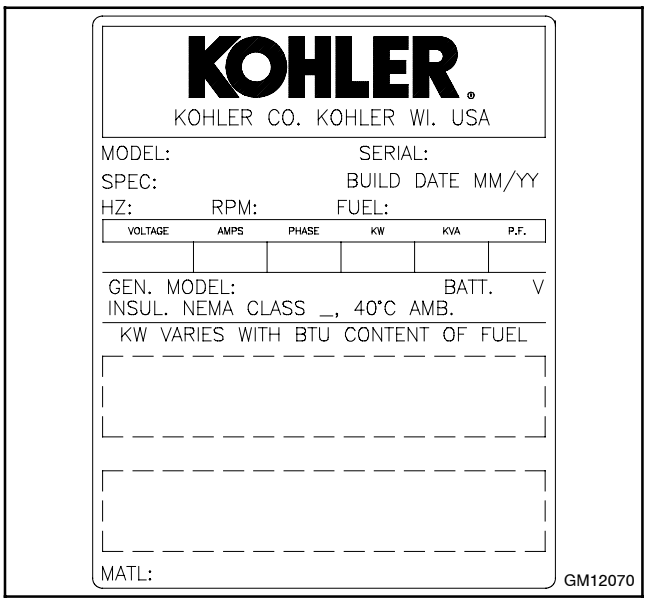

Emission Compliance, 8.5/12 kW

All model 8.5 kW and 12 kW generator sets with multi-fuel systems are emission-certified.

An engine or generator set with the following identification label is certified to meet Small Off-Road Engine emission standards for EPA/CARB.

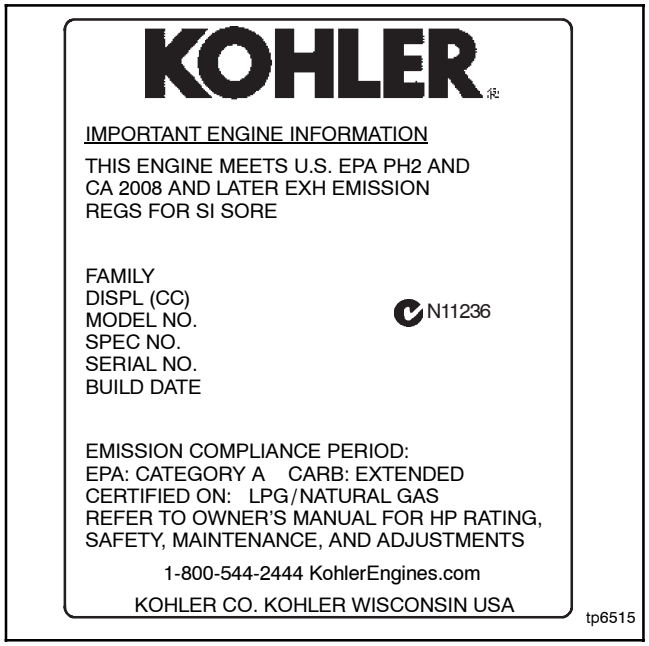

Figure 1 Engine Identification Label, 8.5/12 kW Generator Set

This engine/generator is certified to operate using natural gas or propane fuel.

The Emission Compliance Period referred to on the Emission Control or Air Index label indicates the number of operating hours for which the engine has been shown to meet CARB or EPA emission requirements. The following table provides the engine compliance period (in hours) associated with the category descriptor found on the certification label.

Emission Compliance Period (hours)			
EPA	C 250	B 500	A 1000
CARB	Moderate, 125	Intermediate, 250	Extended, 500

Figure 2 8.5 kW and 12 kW

Refer to the certification label for engine displacement.

The exhaust emission control system for the CH640 engine (8.5 kW) and CH740 engines (12 kW) is EM.

Emission Compliance, 17/18 kW

The 17/18RES generator set engine is certified to meet emission regulations for U.S. EPA phase 2 small off-road engines and CA 2006 and later LSI engines (large spark-ignited engines at or below 1 liter).

Figure 3 Engine Identification Label, 17/18 kW Generator Set

The Emission Compliance Period referred to on the Engine Identification label indicates the number of operating hours for which the engine has been shown to meet EPA emission requirements. The engine compliance period (in hours), associated with the Category A descriptor found on the certification label, is 1000 hours.

Emission Compliance Period (hours)	
EPA	Category A, 1000 hours

Figure 4 17/18 kW

Refer to the certification label for engine displacement.

The exhaust emission control system for the CH980 engine (17/18kW) is EM.

For professional advice on generator set power requirements and conscientious service, please contact your nearest Kohler distributor or dealer.

- Consult the Yellow Pages under the heading Generators—Electric.
- Visit the Kohler Power Systems website at KohlerPower.com.
- Look at the labels and stickers on your Kohler product or review the appropriate literature or documents included with the product.
- Call toll free in the US and Canada 1-800-544-2444.
- Outside the US and Canada, call the nearest regional office.

Headquarters Europe, Middle East, Africa (EMEA)
Kohler Power Systems
3 rue de Brennus
93200 Saint Denis
France
Phone: (33) 1 49 178300
Fax: (33) 1 49 178301

Asia Pacific
Power Systems Asia Pacific Regional Office
Singapore, Republic of Singapore
Phone: (65) 6264-6422
Fax: (65) 6264-6455

China
North China Regional Office, Beijing
Phone: (86) 10 6518 7950
(86) 10 6518 7951
(86) 10 6518 7952
Fax: (86) 10 6518 7955

East China Regional Office, Shanghai
Phone: (86) 21 6288 0500
Fax: (86) 21 6288 0550

India, Bangladesh, Sri Lanka
India Regional Office
Bangalore, India
Phone: (91) 80 3366208
(91) 80 3366231
Fax: (91) 80 3315972

Japan, Korea
North Asia Regional Office
Tokyo, Japan
Phone: (813) 3440-4515
Fax: (813) 3440-2727

Latin America
Latin America Regional Office
Lakeland, Florida, USA
Phone: (863) 619-7568
Fax: (863) 701-7131

Notes

1.1 Introduction

The generator set specification sheets provide specific generator and engine information. Refer to the spec sheet for data not supplied in this manual. Consult the generator set service manual, engine operation manual, and engine service manual for additional specifications. Obtain copies of the latest spec sheets, manuals, diagrams, and drawings from your local distributor/ dealer.

1.2 Generator

The generator uses Kohler's unique PowerBoost™ voltage regulation system, which provides instant response to load changes.

PowerBoost™ ensures reliable motor starting and consistent voltage levels. PowerBoost™ utilizes a voltage excitation system that employs a winding independent of the main output windings to provide excitation voltage.

1.3 Engine

The generator set has a four-cycle, twin cylinder, air-cooled Kohler® engine. The engine operates on clean-burning natural gas or propane (LP) vapor. Engine features include:

- Efficient overhead valve design and full pressure lubrication for maximum power, torque, and reliability under all operating conditions.
- Dependable, maintenance-free electronic ignition.
- Precision-formulated cast iron construction of parts subjected to the most wear and tear.
- Field-convertible multi-fuel systems that allow fuel changeover from natural gas to LP vapor (and vice-versa) while maintaining CARB emission certification.
- Digital spark advance optimizes ignition timing for the selected fuel. (12 –18 kW models)

1.4 Advanced Digital Control

The generator set is equipped with the Kohler® ADC-RES Advanced Digital Control. Controller features include the following:

- Compact controller
- Integrally mounted to the generator set
- LED display:
  - Engine runtime, hours
  - AC voltage
  - Frequency (Hz)
  - Battery voltage
  - Crank cycle status
  - Setup information
  - Application software version
- LED display communicates faults:
  - High battery voltage
  - High engine temperature
  - Low battery voltage
  - Low oil pressure
  - Overcrank safety
  - Overfrequency
  - Overspeed
  - Overvoltage
  - Underfrequency
  - Undervoltage
- Membrane keypad for configuration and adjustment
  - Password-protected user access to menus
  - Voltage, gain, and speed adjustment
  - System configuration (system voltage/frequency settings and generator set model)
- Remote two-wire start/stop capability
- Digital isochronous governor to maintain steady-state speed at all loads
- Digital voltage regulation: ±1.5% RMS no-load to full-load
- Automatic start for programmed cranking cycle
- Master control switch mounted on the junction box: Run/Off-Reset/Auto
- Upgradeable application software

1.5 Service Views for Maintenance

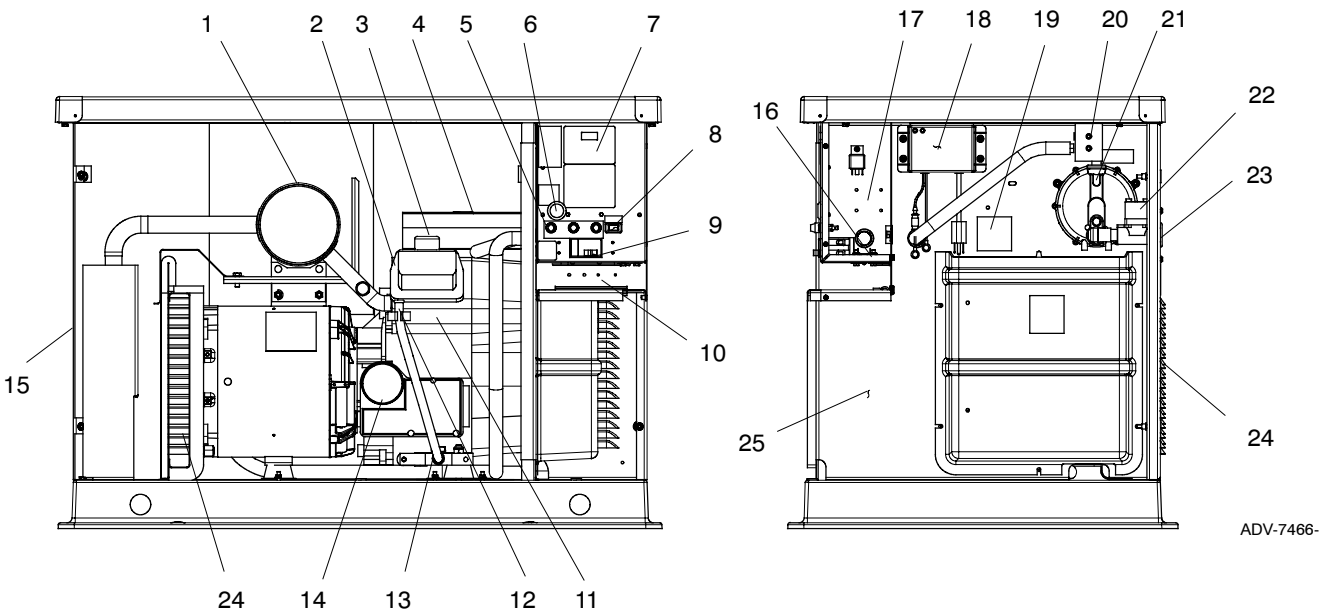

1. Muffler
2. Oil check
3. Oil fill
4. Air cleaner
5. Fuses
6. RS-232 connector (for application program updates)
7. Controller user interface (see Figure 2-1)
8. Generator set master switch (RUN-OFF/RESET-AUTO)
9. Line circuit breaker (single-phase models)*
10. Field-connection terminal block location (single-phase models)*
11. Spark plug locations (both sides)
12. Oil drain hose
13. Oil drain valve
14. Oil filter
15. Exhaust
16. Equipment ground
17. Relay board location (optional)
18. Battery charger (single-phase models)†
19. DSAI lead location (12 kW models)
20. Fuel block
21. Gas regulator assembly
22. Fuel solenoid valve
23. Fuel inlet
24. Air intake
25. Engine starting battery location (battery purchased separately)

* See Figure 1-3 for additional components for 3-phase models.

† See Figure 2-9 for 3-phase battery charger locations.

Figure 1-1 Generator Set Components, 8.5/12 kW

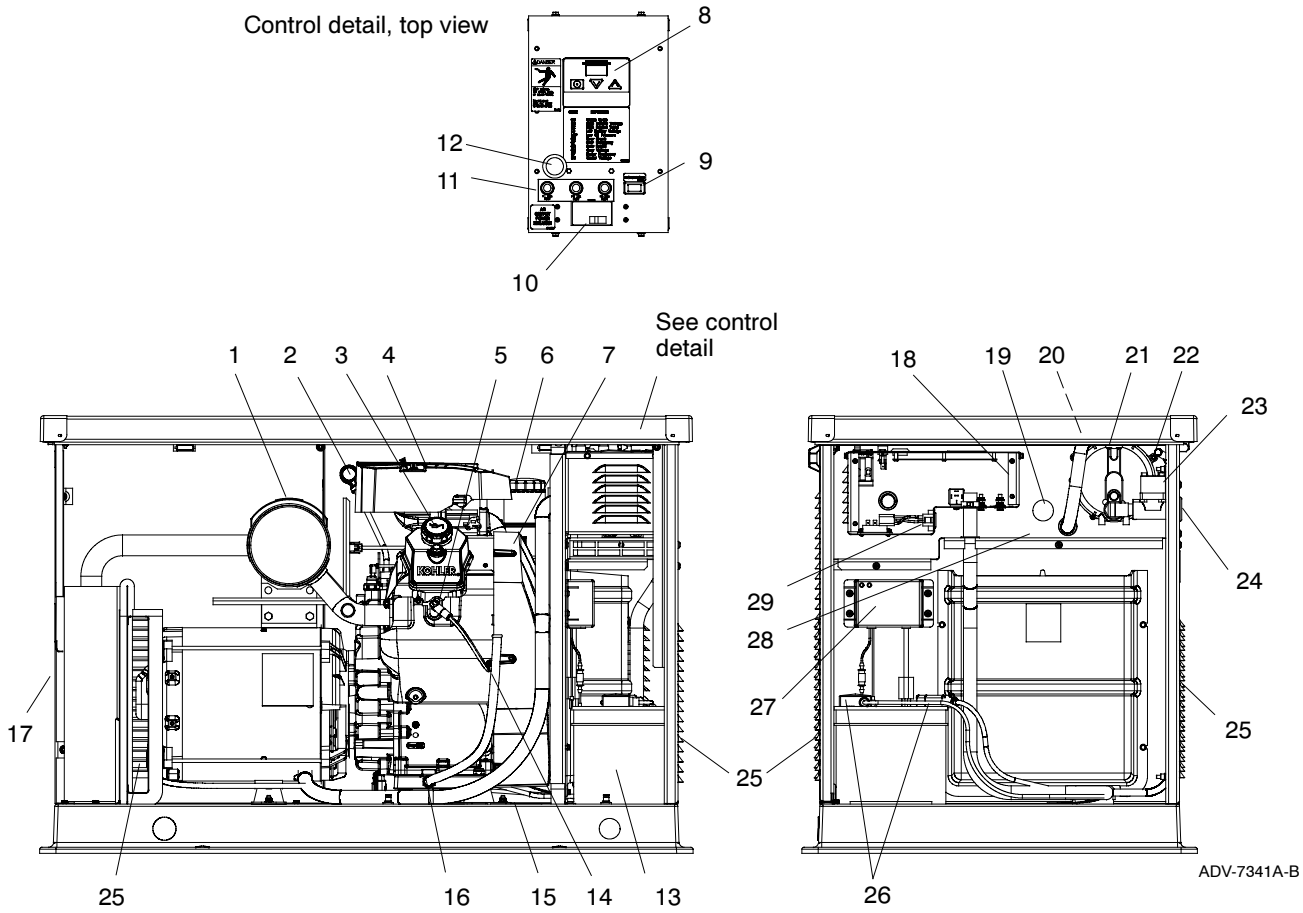

1. Muffler
2. Oil check
3. Oil fill
4. Air cleaner
5. Spark plug locations (both sides)
6. Oil filter
7. Oil cooler location
8. ADC-RES Advanced Digital Control user interface
9. Generator set master switch (RUN-OFF/RESET-AUTO)
10. Line circuit breaker (single-phase models)*
11. Fuses
12. RS-232 connector (for application program updates)
13. Engine starting battery location (battery purchased separately)
14. Oil drain hose
15. Nameplate location (on base)
16. Oil drain valve
17. Exhaust outlet
18. Relay board location (optional)
19. Carburetor heater access opening
20. LP fuel orifice location (inside hose fitting)
21. Gas regulator assembly
22. DSAI leads
23. Fuel solenoid valve
24. Fuel inlet
25. Air intake
26. Battery cables
27. Battery charger (single-phase models)†
28. Field-connection terminal block location (single-phase models)*
29. 120 VAC receptacles for battery charger and optional carburetor heater (single-phase models)

* See Figure 1-3 for additional components for 3-phase models.

† See Figure 2-9 for 3-phase battery charger locations.

Figure 1-2 Generator Set Components, 17/18 kW

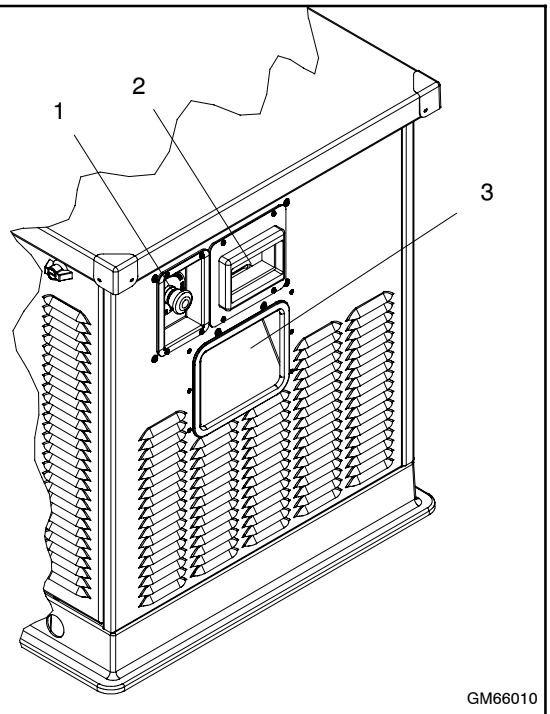

1. Emergency stop switch
2. Field-connection terminal block and circuit breakers
3. Cable inlet area

Figure 1-3 Additional Components, TRES (3-phase) Models

2.1 Prestart Checklist

To ensure continued satisfactory operation, perform the following checks or inspections before or at each startup, as designated, and at the intervals specified in the service schedule. In addition, some checks require verification after the unit starts.

Air Cleaner. Check for a clean and installed air cleaner element to prevent unfiltered air from entering the engine.

Air Inlets. Check for clean and unobstructed air inlets.

Battery. Check for tight battery connections. Consult the battery manufacturer's instructions regarding battery care and maintenance.

Exhaust System. Check for exhaust leaks and blockages. Check the muffler condition and check for tight exhaust system connections.

Inspect the exhaust system components for cracks, leaks, and corrosion.

- Check for corroded or broken metal parts and replace them as needed.
- Check that the exhaust outlet is unobstructed.

Oil Level. Maintain the oil level at or near, not over, the full mark on the dipstick.

Operating Area. Check for obstructions that could block the flow of cooling air. Keep the air intake area clean. Do not leave rags, tools, or debris on or near the generator set.

2.2 Exercising Generator Set

Operate the generator set without load once each week for 20 minutes. If the generator set is not connected to an automatic transfer switch (ATS) with an exercise option, exercise the unit in the presence of an operator.

The operator should perform all of the prestart checks before starting the exercise procedure. Start the generator set according to the starting procedure in the controller section of this manual. While the generator set is operating, listen for a smooth-running engine and visually inspect the generator set for fluid or exhaust leaks. Check the air inlets and outlets and remove any items restricting the air flow.

2.3 ADC-RES Controls and Indicators

Figure 2-1 illustrates the ADC-RES user interface and other items on the generator set junction box. Figure 2-2 describes the ADC-RES controls and indicators.

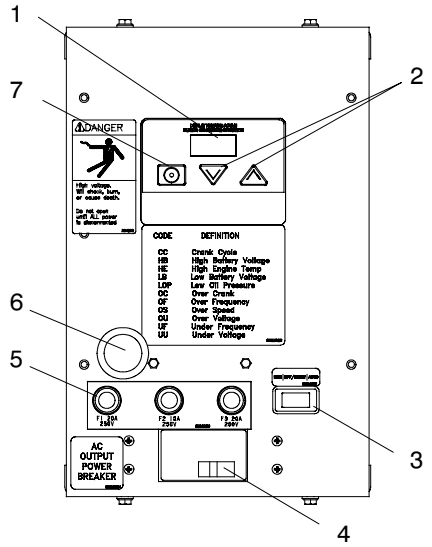

1. LED display
2. Up and down arrow buttons
3. Generator set master switch
4. Line circuit breaker (single-phase models)
5. Fuses
6. RS-232 connector (for application program upgrade)
7. Select button (use for setup and adjustment only)

Figure 2-1 ADC-RES Controls

2.3.1 LED Display

The LED display is activated by a start or RUN command as follows:

- Move the master switch to RUN.
- With the master switch in AUTO, send a remote start command (close the remote start contact across leads 3 and 4).

The LED display indicates generator set status as shown in Figure 2-2. When the generator set is running, engine runtime hours are shown unless the arrow buttons are used to step through the other displays as described in Section 2.3.2.

When the master switch is in AUTO, the display may turn off 48 hours after generator set shutdown. See Section 2.4, Controller Power.

Control or Indicator	Item	Description
LED display	Runtime hours	Displays total generator set runtime hours while the generator set is running and when no other codes are displayed.
	Metering display	Displays AC voltage (output), frequency, and battery voltage. Press the up or down arrow when runtime hours are displayed to step through these displays.
	Crank indication	Displays CC_1, CC_2, or CC_3 to indicate the first, second, or third attempt to start the engine. The last digit flashes during the crank cycle rest periods.
	Software version number	The software version number (v#.##) is displayed when entering configuration mode. See the installation manual.
	Fault codes	Flashes a 2- or 3-letter fault code to indicate various fault conditions. See Section 2.6.
Keypad	Select and arrow buttons	Use the arrow buttons to step through the data displays. See Figure 2-3. The keypad is also used for controller setup and adjustment. The setup and adjustment functions are password-protected. Have setup and adjustments performed only by an authorized distributor/dealer.
Generator set master switch	Three-position switch	Switch functions as the generator set operation and controller reset switch.

Figure 2-2 ADC-RES Controls and Indicators

2.3.2 Controller Keypad

The three buttons on the controller keypad are Select, Up, and Down. See Figure 2-1.

When the generator set is running, the up and down arrow buttons can be used to step through system data displays as shown in Figure 2-3. After 10 seconds, the display returns to engine runtime hours.

The buttons on the controller keypad are also used for system configuration and adjustment. The system configuration is factory-set and should not require changes under normal operating conditions. Contact an authorized distributor/dealer or service technician if adjustments are required.

2.3.3 Generator Set Master Switch

The generator set master switch is located on the junction box below the ADC-RES user interface. The master switch positions are RUN, OFF/RESET, and AUTO. See Section 2.5 for operation instructions.

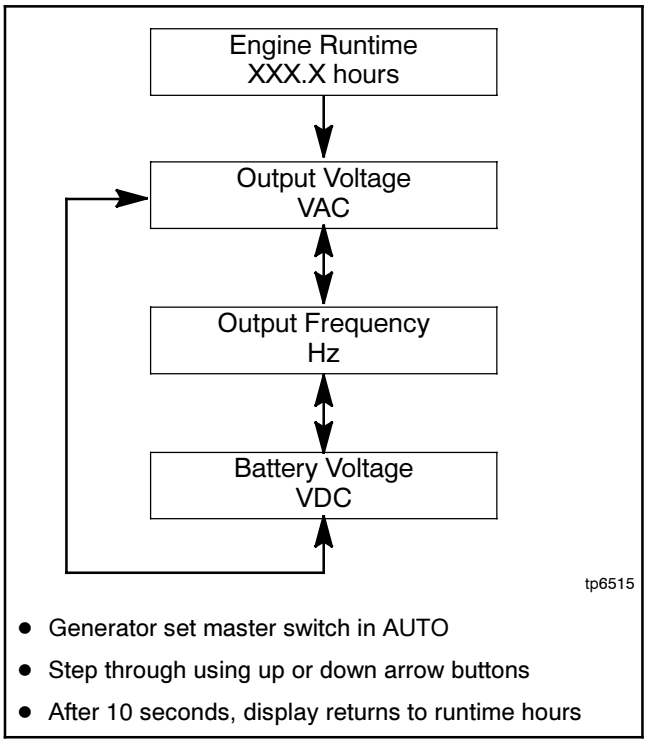

Figure 2-3 Data Displays

2.4 Controller Power

The ADC-RES is powered by the generator set engine starting battery.

Note: The generator sets are equipped with factory-installed battery chargers to prevent battery discharge. The battery charger must be connected to utility power.

2.4.1 Standby Mode

When the generator set master switch is in the AUTO position and the engine is not running, the controller is in standby mode. Engine runtime hours are shown on the display. A remote start signal (contact closure) will start and run the generator set.

The controller can be set to go into sleep mode if there is no start signal for 48 hours.

2.4.2 Sleep Mode

Controllers with application code version 1.13 or higher are shipped with the sleep mode disabled and J1939 communication enabled. The controller will remain in standby mode whenever the master switch is in AUTO and the engine is not running.

Communication parameter Cn can be changed to disable communication and enable the sleep mode if remote communication is not required. See Installation Manual TP-6514 for instructions to change parameter Cn.

Sleep Mode. If the controller communication is disabled and the generator set master switch is in the AUTO position, the controller powers down automatically after 48 hours of inactivity. The controller display is dark and battery draw is minimized. A remote start signal from a transfer switch or a remote start/stop switch connected to controller leads 3 and 4 reactivates the controller. Moving the generator set master switch to the RUN position also activates the controller.

2.5 Generator Set Operation

2.5.1 Starting Generator Set

Local Starting

Move the generator set master switch to the RUN position to immediately start the generator set.

Auto (Automatic) Starting

Move the generator set master switch to the AUTO position to allow startup by an automatic transfer switch (ATS) or remote start/stop switch, if equipped. Close a contact across engine start leads 3 and 4 to signal the controller to start the generator set.

Crank Cycle

The controller attempts to start the generator set three times (three crank cycles, 15 seconds crank and 15 seconds off). See Figure 2-2 for display information during the crank cycle. If the generator set does not start in three attempts, the system shuts down on an overcrank fault. See Section 2.6.

2.5.2 Stopping Generator Set

Local Stopping

1. Run the generator set with no load for at least 2 minutes to ensure adequate engine cooldown.
2. Move the generator set master switch to the OFF/RESET position. The engine stops.

Automatic Stopping

With the generator set master switch in the AUTO position, open the contact across engine start leads 3 and 4 to signal the generator set to stop.

An automatic transfer switch (ATS) connected to controller leads 3 and 4 operates as follows:

1. The ATS disconnects the load from the generator set.
2. If the ATS is equipped with an engine cooldown time delay, the generator set continues to run for a preset engine cooldown time.

   Note: There is no engine cooldown time delay on the ADC-RES controller.

3. The ATS opens the connection between controller leads 3 and 4. The generator set shuts down. The controller enters standby mode and displays engine runtime hours.

Emergency Stopping (TRES Models Only)

Push the red emergency stop switch for immediate generator set shutdown in the case of an emergency. See Figure 2-4 for the emergency stop switch location.

The emergency stop switch shuts down the generator set immediately. The controller display shows AF (auxiliary fault) when the emergency stop button is activated.

Use the generator set master switch for normal shutdowns.

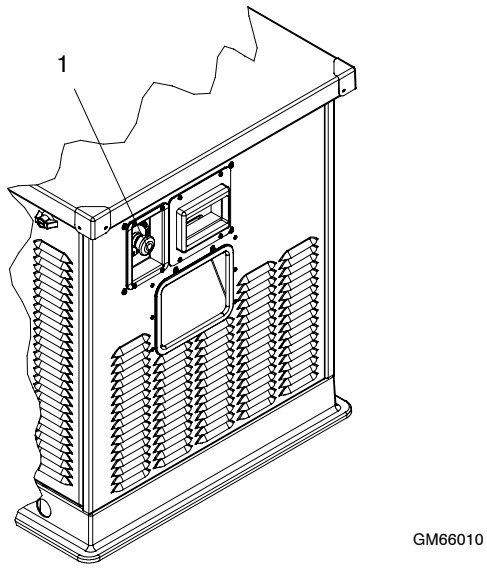

1. Emergency stop switch

Figure 2-4 Emergency Stop Switch, TRES Models

2.5.3 Resetting Emergency Stop Switch (TRES Models only)

Use the following procedure to reset the generator set after shutdown by the emergency stop switch. See Section 2.6.3 to reset the generator set after a fault shutdown.

1. Place the generator set master switch in the OFF/RESET position.
2. Investigate and correct the cause of the emergency stop.
3. Rotate the emergency stop switch knob clockwise and release it. Check that the knob returns to the deactivated (out) position.
4. Move the generator set master switch to the RUN or AUTO position to restart the generator set. Verify that the controller display no longer shows a fault code. The generator set engine will not start until the reset procedure is complete.

2.6 Faults

2.6.1 Shutdowns

Under the fault shutdown conditions listed in Figure 2-5, the generator set shuts down automatically and the controller displays a fault code. The generator set cannot be restarted until the fault condition is corrected and the controller is reset. See Section 2.6.3 to reset the controller after a fault shutdown.

The shutdown switches on the generator set will automatically reset when the problem is corrected. For example, the high engine temperature switch resets automatically when the generator set cools. However, the fault does not clear until the controller is reset.

2.6.2 Warnings

The controller displays a fault code but the generator set does not shut down on a high battery voltage warning or a low battery voltage warning. The controller resets automatically after a battery voltage fault condition is corrected.

2.6.3 Resetting Controller after a Fault Shutdown

Always identify and correct the cause of a fault shutdown before resetting the controller. Check the fault code displayed on the ADC-RES and refer to Figure 2-5 to identify and correct the fault condition before proceeding.

Use the following procedure to reset the generator set controller after a fault shutdown.

1. Move the generator set master switch to OFF/ RESET.
2. Disconnect the generator set from the load using the line circuit breaker or ATS. See the safety precautions at the beginning of this manual before proceeding.
3. Identify and correct the cause of the fault shutdown. See the safety precautions at the beginning of this manual before proceeding. Refer to Section 4, Troubleshooting.
4. Start the generator set by moving the generator set master switch to RUN. Test operate the generator set to verify that the cause of the shutdown has been corrected.
5. Move the generator set master switch to OFF/ RESET.
6. Reconnect the generator set to the load using the line circuit breaker or ATS.
7. Move the generator set master switch to the AUTO position for startup by remote transfer switch or remote start/stop switch.

   Note: The controller's LED display remains off until an engine start command is received.

Code	Fault	Description	Check
AF	Auxiliary fault input shutdown	Indicates a shutdown initiated by pushing the emergency stop switch. (TRES models only) Not used on RES models.	Check the position of the emergency stop button. (TRES models only)
HE	High engine temperature shutdown	Shutdown occurs if the engine coolant temperature exceeds the maximum temperature for more than 5 seconds. This function becomes active after the engine reaches the crank disconnect speed.	Check for blocked air inlets and exhaust outlets.
LOP	Low oil pressure shutdown	Shutdown occurs if a low oil pressure condition exists for more than 5 seconds. This function becomes active 30 seconds after the engine has reached crank disconnect speed (30 second inhibit). **Note:** The low oil pressure shutdown does not protect against low oil level. Check the oil level at the engine.	Check for leaks in the lubrication system. Check the oil level and add oil if the level is low.
OC	Overcrank shutdown	Shutdown occurs after 3 unsuccessful starting attempts. The crank cycle is set for three starting attempts of 15 seconds cranking and 15 seconds rest.	Check the fuel supply, spark plug, and battery. Check for loose connections. Contact an authorized distributor/dealer for service if problem continues.
	Locked rotor	The generator set also shuts down on OC if no engine rotation is sensed during cranking. Shuts down 3 seconds after the fault is detected.	
OF	Overfrequency shutdown	Shutdown occurs when the governed frequency exceeds 110% of the system's frequency setpoint for more than 5 seconds. This function becomes active 10 seconds after engine start (10 second inhibit).	Contact an authorized distributor/dealer for service if problem continues.
OS	Overspeed shutdown	Shutdown occurs if the engine speed exceeds 110% of the normal running speed for more than 0.3 seconds.	Contact an authorized distributor/dealer for service if problem continues.
OU	Overvoltage shutdown	Shutdown occurs if the voltage exceeds 120% of the system nominal voltage for more than 2 seconds.	Contact an authorized distributor/dealer for service if problem continues.
UF	Underfrequency shutdown	Shutdown occurs if the governed frequency falls below 54 Hz for more than 5 seconds. Shutdown also occurs if the governed frequency falls below 56.5 Hz for more than 60 seconds. This function becomes active 10 seconds after engine start. (10 second inhibit).	Reduce the load and restart the generator set. Contact an authorized distributor/dealer for service if problem continues.
UU	Undervoltage shutdown	Shutdown occurs if the voltage falls below 80% of the nominal system voltage for more than 10 seconds.	Reduce the load and restart the generator set. Contact an authorized distributor/dealer for service if problem continues.
HB	High battery voltage warning	Fault code is displayed if the engine starting battery voltage rises above 16 VDC for more than 30 seconds when the engine is running. Not operative during the engine crank cycle, this fault condition does not inhibit engine starting. The fault condition clears when the battery voltage returns to an acceptable level.	Check the battery rating and condition. Check the battery charger operation.
LB	Low battery voltage warning	Fault code is displayed if the engine starting battery voltage falls below 11 VDC for more than 30 seconds when the engine is not running. Not operative during the engine crank cycle, this fault condition does not inhibit engine starting. The fault condition clears when the battery voltage returns to an acceptable level.	Check the battery rating and condition. Check the battery charger operation. Charge or replace the battery.

Figure 2-5 ADC-RES Fault Codes

2.7 Battery Charger

2.7.1 RES Battery Charger

RES model generator sets are equipped with a 6-amp float/equalize battery charger to maintain the engine starting battery. The charger's power cord must be connected to a 120 VAC power source. Figure 2-6 illustrates the battery charger.

The battery charger uses an AGS 10 inline fuse. The fuse is located in the battery lead. See Figure 2-6.

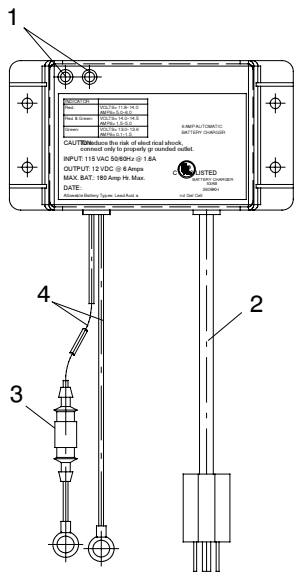

1. LED indicators
2. AC power cord
3. Fuse
4. Battery leads, 12 VDC

Figure 2-6 6-Amp Float/Equalize Battery Charger

Battery Charger Operation

Figure 2-7 illustrates the three-stage charging method. Red and green LEDs indicate charger operation. The chart in Figure 2-8 describes the LED indicator operation during each stage of the charging process. See Section 4.4 for battery charger troubleshooting information, if necessary.

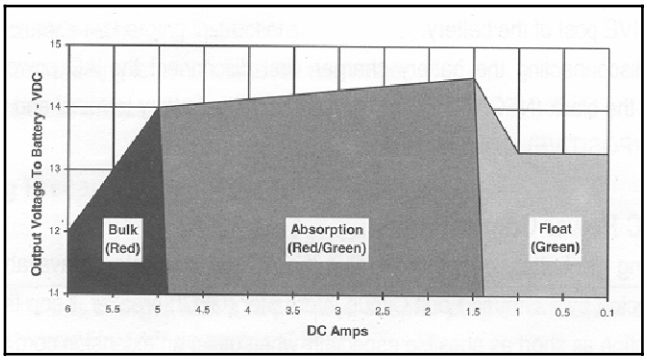

Figure 2-7 Charging Method

Display	Operating Condition
Red ON Green OFF	When the red LED is on, it indicates the battery is discharged and the battery charger is recharging at the BULK rate (stage 1). This charging rate is 6 amps. While the red LED is on, the voltage measured (with the battery charger on) will be 11.8–14 volts. If the red LED stays on for more than 24 hours, refer to Section 4.4 in this manual.
Red ON Green ON	When both the green and the red LEDs are on, the battery charger is charging at an ABSORPTION rate of between 1.5 and 5 amps (stage 2). This mode of charging gradually tops off your battery, and reduces harmful sulfating. While both LEDs are on, the voltage measured (with the battery charger on) should be approximately 14.0–14.5 VDC. If both LEDs stay on longer than 24 hours, refer to Section 4.4 in this manual.
Red OFF Green ON	When the green LED is on, the battery charger is charging at a FLOAT or MAINTENANCE rate of less than 1.5 amps (stage 3). Your battery is now 90% charged and ready for use. This float charging current will gradually decrease to as low as 0.1 amps as the battery reaches 100% charge. It will now be kept at full charge without overcharging. If the green LED stays on when your battery is known to be low, refer to Section 4.4 in this manual.

Figure 2-8 Battery Charger LED Indicator Functions

2.7.2 TRES Battery Charger

Three-phase model TRES generator sets are equipped with a 2.5-amp battery charger to maintain the engine starting battery. Utility power must be supplied to the generator set for the battery charger.

The battery charger is located in or near the controller junction box. See Figure 2-9 for the battery charger location.

A green LED on the side of the battery charger indicates battery charger operation. See Figure 2-10.

Two internal fuses protect the battery charger. See Section 4.4 for battery charger troubleshooting information, if necessary.

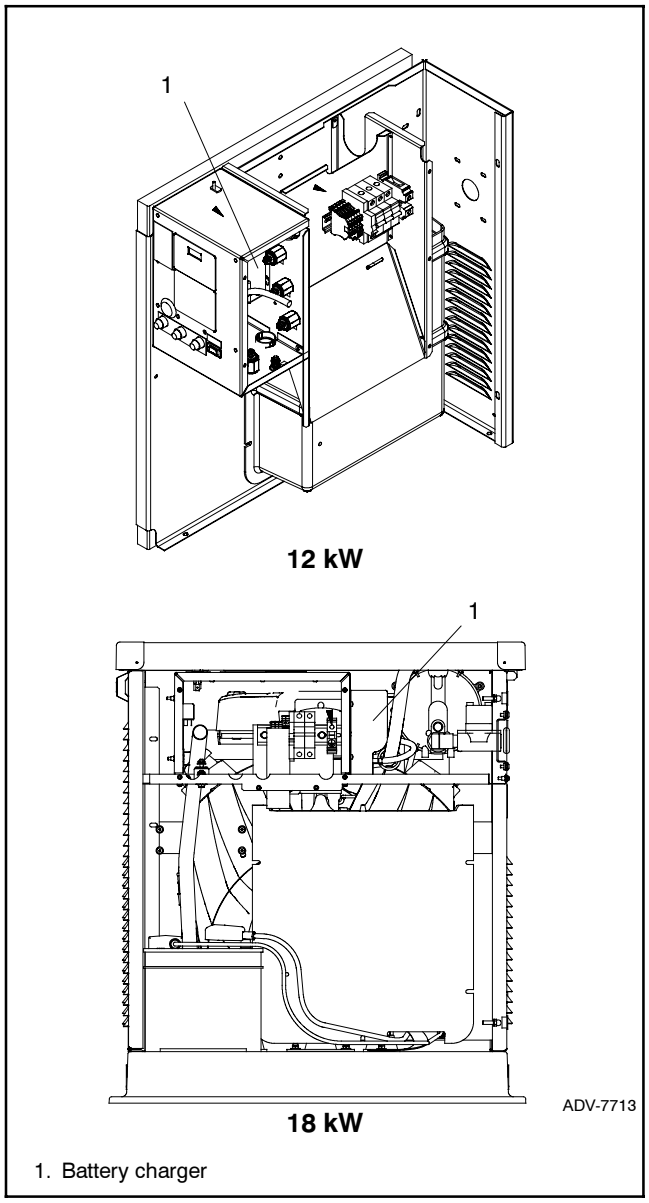

Figure 2-9 Battery Charger Location, TRES (3-phase) Models

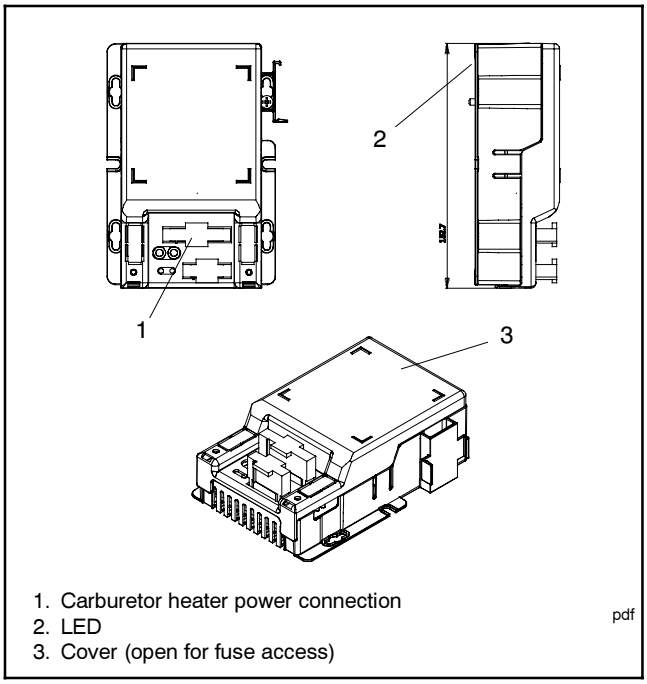

Figure 2-10 Battery Charger for 3-Phase Models

⚠ WARNING

Accidental starting.
Can cause severe injury or death.

Disconnect the battery cables before working on the generator set. Remove the negative (-) lead first when disconnecting the battery. Reconnect the negative (-) lead last when reconnecting the battery.

Disabling the generator set. Accidental starting can cause severe injury or death. Before working on the generator set or connected equipment, disable the generator set as follows: (1) Move the generator set master switch to the OFF position. (2) Disconnect the power to the battery charger. (3) Remove the battery cables, negative (-) lead first. Reconnect the negative (-) lead last when reconnecting the battery. Follow these precautions to prevent starting of the generator set by an automatic transfer switch, remote start/stop switch, or engine start command from a remote computer.

⚠ WARNING

Hot engine and exhaust system.
Can cause severe injury or death.

Do not work on the generator set until it cools.

Servicing the exhaust system. Hot parts can cause severe injury or death. Do not touch hot engine parts. The engine and exhaust system components become extremely hot during operation.

⚠ WARNING

Hazardous voltage. Moving parts.
Can cause severe injury or death.

Operate the generator set only when all guards and electrical enclosures are in place.

Servicing the generator set when it is operating. Exposed moving parts can cause severe injury or death. Keep hands, feet, hair, clothing, and test leads away from the belts and pulleys when the generator set is running. Replace guards, screens, and covers before operating the generator set.

3.1 Scheduled Maintenance

Refer to the following service schedules and the runtime hours displayed on the ADC-RES display to schedule routine maintenance. Intervals are shown in hours of operation and/or time intervals (i.e. weekly, monthly, quarterly, etc.) Have an authorized distributor/dealer service the generator set at the designated intervals in the service schedule for the life of the generator set. Service units subject to extreme weather, long operating hours, or dusty or dirty conditions more frequently.

Contact an authorized distributor/dealer for parts.

3.1.1 Service Schedule, 8.5/12 kW Models

System Component or Procedure	See Section	Procedure: Visually Inspect	Check	Change	Clean	Test	Frequency
Fuel							
Flexible lines and connections		X		R			Quarterly
Main tank supply level			X				Weekly
Fuel piping		X					Yearly
Lubrication	3.2						
Oil level		X	X				8 hours or before use
Crankcase breather hose		X					Yearly or 500 hours
Change oil				X			Yearly or 100 hours
Replace filter				X			Yearly or 200 hours
Cooling	3.5						
Air ducts, louvers			X		X		Yearly
Exhaust Line	3.6						
Leakage		X	X				Weekly
Insulation, fire hazards		X					Yearly
Obstructions or combustible materials near exhaust outlet		X					Weekly
DC Electrical System	3.7						
Battery charger operation, charge rate (if equipped)		X					Monthly
Remove corrosion, clean and dry battery and rack		X			X		Yearly
Clean and tighten battery terminals and inspect boots		X	X				Yearly
Battery electrolyte level and specific gravity *			X				Yearly
AC Electrical System							
Tighten control and power wiring connections			X				Yearly
Remote control system, if equipped						X	Monthly
Visible wear or damage		X					Quarterly
Wire abrasions where subject to motion		X	X				Six Months
Wire-cable insulation condition		X					3 Years or 500 hours
Engine and Mounting							
Visible wear or damage		X					Weekly
Air cleaner and precleaner service †	3.4			R			Yearly or 100 hours
Spark plugs	3.3			X			Yearly or 300 hours
Replace stepper motor coupling and bushing				D			500 hours
Generator							
Visible wear or damage		X					Quarterly
Exercise generator set						X	Weekly
Brushes and collector ring		D			D		Yearly
Measure and record resistance readings of windings with insulation tester (Megger®, with SCR assembly or rectifier and load leads disconnected) *						D	3 Years
General Condition of Equipment							
Evidence of vibration, leakage, excessive noise, temperature, or deterioration		X	X		X		Weekly
Interior of sound enclosure		X			X		Quarterly

* *Not necessary for maintenance-free batteries.
† Service more frequently under extremely dusty/dirty conditions.
Megger® is a registered trademark of Biddle Instruments.

X Action
D Authorized distributor/dealer only
R Replace as necessary

3.1.2 Service Schedule, 17/18 kW Models

System Component or Procedure	See Section	Procedure: Visually Inspect	Check	Change	Clean	Test	Frequency
Fuel							
Flexible lines and connections		X		R			Quarterly
Main tank supply level			X				Weekly
Fuel piping		X					Yearly
Lubrication	3.2						
Oil level			X				8 hours or before each use
Change oil				X			Yearly or 150 hours
Replace filter				X			Yearly or 150 hours
Crankcase breather hose		X					Yearly or 500 hours
Oil cooler		X			X		Yearly or 100 hours
Cooling	3.5						
Air ducts, louvers			X		X		Yearly
Exhaust System	3.6						
Leakage		X	X				Weekly
Insulation, fire hazards		X					Yearly
Obstructions or combustible materials near exhaust outlet		X					Weekly
DC Electrical System	3.7						
Battery charger operation, charge rate		X					Monthly
Remove corrosion, clean and dry battery and rack		X			X		Yearly
Clean and tighten battery terminals and inspect boots		X	X				Yearly
Battery electrolyte level and specific gravity *			X				Yearly
AC Electrical System							
Tighten control and power wiring connections			X				Yearly
Remote control system, if equipped						X	Monthly
Visible wear or damage		X					Quarterly
Wire abrasions where subject to motion		X	X				Six Months
Wire-cable insulation condition		X					3 Years or 500 hours
Engine and Mounting							
Visible wear or damage		X					Weekly
Air cleaner service †	3.4		150	300			Yearly or hours shown
Spark plugs	3.3		150	300			Yearly or hours shown
Replace stepper motor coupling and bushing				D			500 hours
Generator							
Visible wear or damage		X					Quarterly
Exercise generator set						W	Weekly
Brushes and collector ring		D			D		Yearly
Measure and record resistance readings of windings with insulation tester (Megger®, with SCR assembly or rectifier and load leads disconnected)						D	3 Years
General Condition of Equipment							
Evidence of vibration, leakage, deterioration, unusual or excessive noise or temperature		X	X		X		Weekly
Interior of sound enclosure		X			X		Quarterly

* Not necessary for maintenance-free batteries.
† Service more frequently under extremely dusty/dirty conditions.
Megger® is a registered trademark of Biddle Instruments.

X = Action
D Authorized distributor/dealer only
R Replace as necessary

3.2 Lubrication System

See the service schedules in Section 3.1 for oil change and oil filter replacement intervals. See the service views in Section 1.5 for the oil drain, oil check, oil fill, and oil filter locations.

3.2.1 Low Oil Pressure Shutdown

The low oil pressure (LOP) shutdown feature protects the engine against internal damage if the oil pressure drops below a minimum pressure because of oil pump failure or other malfunction.

Note: The LOP shutdown feature does not protect against damage caused by operating when the oil level is low; it is not a low oil level shutdown. Check the oil level regularly, and add oil as needed.

3.2.2 Oil Check

The generator set is shipped with oil. Before operating the generator set, check the engine oil in the crankcase. See Figure 3-1.

Maintain the oil level at or near, not over, the full mark on the dipstick. Add 5W-30 synthetic oil when the oil level is low.

Check the oil level before each use. For extended operation, check the oil level every 8 hours. Do not check the oil level when the generator set is running. Shut down the generator set and wait several minutes before checking the oil.

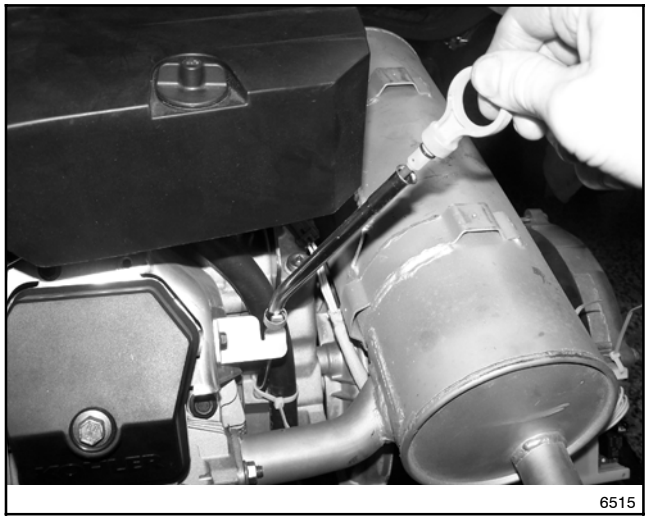

Figure 3-1 Oil Check (17/18 kW shown)

3.2.3 Engine Oil Recommendation

Use 5W-30 API (American Petroleum Institute) Service Class SG, SH, or SJ synthetic oil. Synthetic oil oxidizes and thickens less than other oils and leaves the engine intake valves and pistons cleaner.

3.2.4 Oil Change Procedure

Note: Dispose of all waste materials (engine oil, fuel, filter, etc.) in an environmentally safe manner.

Drain the oil while it is still warm.

1. **Drain the oil.**
   a. Place the generator set master switch in the OFF position.
   b. Disconnect the power to the battery charger.
   c. Disconnect the generator set engine starting battery, negative (–) lead first.
   d. Remove the housing side panel.
   e. Clean the area around the dipstick and oil fill cap.
   f. Remove the oil drain hose from its retaining clip. Remove the cap from the oil drain hose and lower the hose into an oil collection container.
   g. Open the oil drain valve on the engine.
   h. Remove the dipstick and oil fill cap. Allow time for the engine oil to drain completely.
   i. Close the oil drain valve. Replace the cap on the oil drain hose. Replace the oil drain hose in its retaining clip.
   j. Replace the dipstick.
2. **Replace the oil filter.**
   a. Clean the area around the oil filter. Remove the oil filter by rotating it counterclockwise with an oil filter wrench.
   b. Clean the gasket sealing surface of the oil filter adapter.
   c. Apply a light coat of clean oil to the rubber seal of the new oil filter.
   d. Install the new oil filter following the instructions provided with the filter.

3. **Fill with oil.**

   a. Fill the engine to the F mark on the dipstick. The engine oil capacity is shown in Figure 3-2. See Section 3.2.3, Engine Oil Recommendation, for oil selection.

Generator Set kW	Oil Capacity, L (qt.)
8.5/12 kW	1.9 (2.0)
17/18 kW	2.8 (3.0)

Figure 3-2 Engine Oil Capacity

   b. Reinstall the dipstick and the oil fill cap.

   c. Check that the generator set master switch is in the OFF position.

   d. Reconnect the generator set engine starting battery, negative (-) lead last.

   e. Reconnect the power to the battery charger.

   f. Start and run the generator set for a minute to allow the oil pressure to reach operating range.

   g. Stop the generator set, wait 1 minute, and then recheck the oil level. Add oil to bring the level up to the F mark on the dipstick.

4. **Check for leaks.**

   a. Check for oil leaks.

   b. Fix leaks and recheck the oil level.

   c. Reinstall the housing side panel.

3.2.5 Oil Cooler (17/18 kW)

Inspect and clean the oil cooler at the intervals indicated in the service schedule. The oil cooler must be kept free of debris.

See Figure 3-3 for the oil cooler location. The oil cooler is located under the No. 2 cylinder shroud. Remove the top mounting screw and loosen the two side screws, then lift off the cylinder shroud.

Clean the outside of the oil cooler fins with a brush or with compressed air.

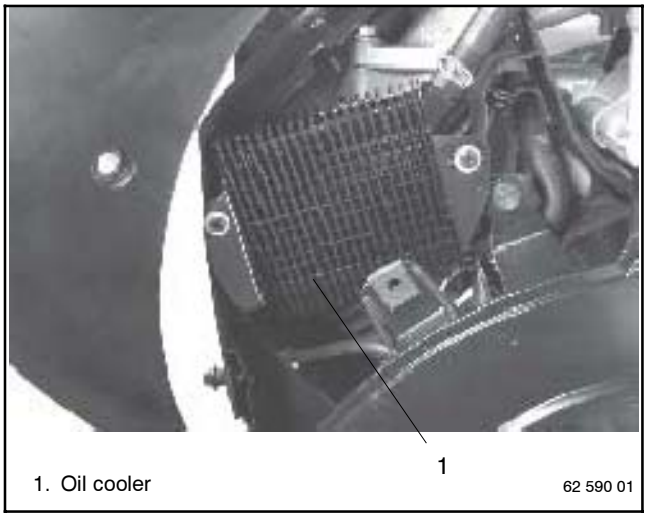

Figure 3-3 Oil Cooler Location, 17/18 kW Models

3.3 Spark Plugs

Reset the spark plug gap or replace the plugs with new plugs as necessary.

1. Clean the area around the base of the spark plug to keep dirt and debris out of the engine.

2. Remove the spark plug and check its condition. Replace the spark plug if it is worn or if its reuse is questionable.

3. Check the spark plug gap using a wire feeler gauge. See Figure 3-4 for the recommended spark plug gap. Adjust the gap by carefully bending the ground electrode. See Figure 3-5 and Figure 3-6.

4. Reinstall the spark plug into the cylinder head. Torque the spark plug to 24.4–29.8 Nm (18–22 ft. lb.)

Generator Set kW	Spark Plug Gap
8.5 kW	0.51 mm (0.020 in.)
12/17/18 kW	0.76 mm (0.030 in.)

Figure 3-4 Spark Plug Gap

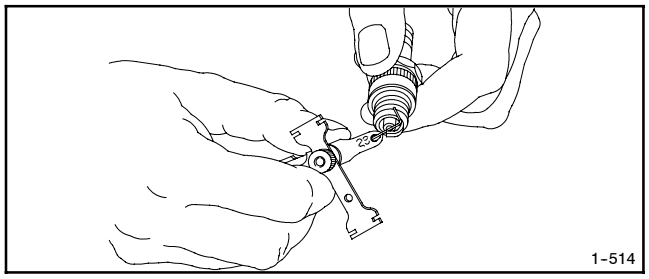

Figure 3-5 Checking the Spark Plug Gap

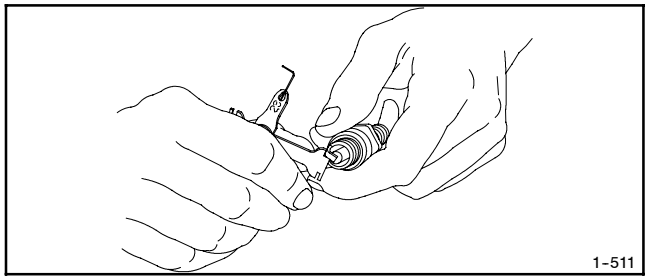

Figure 3-6 Adjusting the Spark Plug Gap

3.4 Air Cleaner Service

3.4.1 Air Cleaner, 8.5/12 kW Models

The engine has a replaceable high-density paper air cleaner element with an oiled foam precleaner. See Figure 3-7.

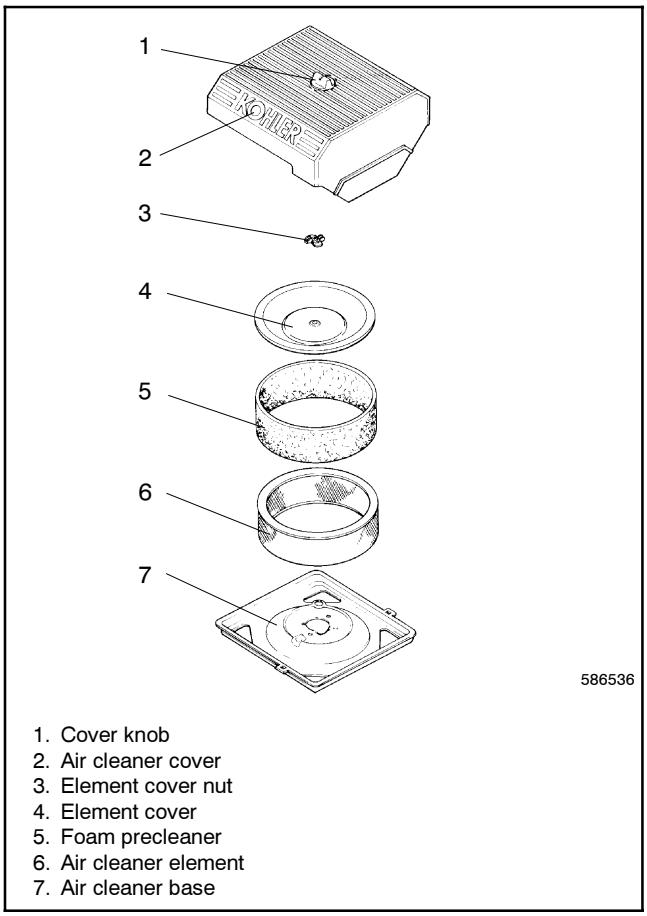

Figure 3-7 Air Cleaner Components

Check for a buildup of dirt and debris around the air cleaner system. Keep this area clean. Also check for loose or damaged components. Replace all bent or damaged air cleaner components.

Note: Operating the engine with loose or damaged air cleaner components could allow unfiltered air into the engine causing premature wear and failure.

Precleaner Service

Use the following procedure to wash and reoil the precleaner as indicated in the service schedule. Wash and reoil the precleaner more often under extremely dusty or dirty conditions.

1. Place the generator set master switch in the OFF/RESET position.

2. Disconnect the power to the battery charger.

3. Disconnect the battery, negative (–) lead first.

4. Loosen the cover retaining knob and remove the cover. Remove the precleaner from the paper element. Wash the precleaner in warm water with detergent. Rinse the precleaner thoroughly until all traces of detergent are eliminated. Squeeze out excess water (do not wring). Allow the precleaner to air dry.

5. Saturate the precleaner with new engine oil. Squeeze out all of the excess oil.

6. Reinstall the precleaner over the paper element.

7. Reinstall the air cleaner cover. Secure the cover with the cover retaining knob.

8. Reconnect the power to the battery charger.

9. Reconnect the generator set engine starting battery, negative (–) lead last.

Paper Element Service

Use the following procedure to replace the paper element at the intervals specified in the service schedule. Replace the paper element more often under extremely dusty or dirty conditions.

1. Place the generator set master switch in the OFF/ RESET position.

2. Disconnect the power to the battery charger.

3. Disconnect the generator set engine starting battery, negative (–) lead first.

4. Loosen the cover retaining knob and remove the cover.

5. Remove the element cover nut, element cover, and the paper element with precleaner.

6. Remove the precleaner from the paper element.

   Note: Do not wash the paper element or clean it with pressurized air, as this will damage the element.

7. Replace the element if it is dirty, bent, or damaged.

8. Check the air cleaner base. Make sure it is secure and not bent or damaged. Also check the element cover for damage and fit. Replace all damaged air cleaner components. Remove any loose dirt or debris from the air cleaner base. Wipe the base carefully so that no dirt drops into the intake throat. Check the condition of the rubber seal on the air cleaner stud and replace the seal if necessary.

9. Reinstall the paper element, precleaner, element cover, element cover nut, and the air cleaner cover. Secure the cover with the cover retaining knob.

10. Reconnect the power to the battery charger.

11. Reconnect the generator set engine starting battery, negative (–) lead last.

3.4.2 Air Cleaner, 17/18 kW Models

The engine is equipped with a replaceable, high density paper air cleaner element. See Figure 3-8.

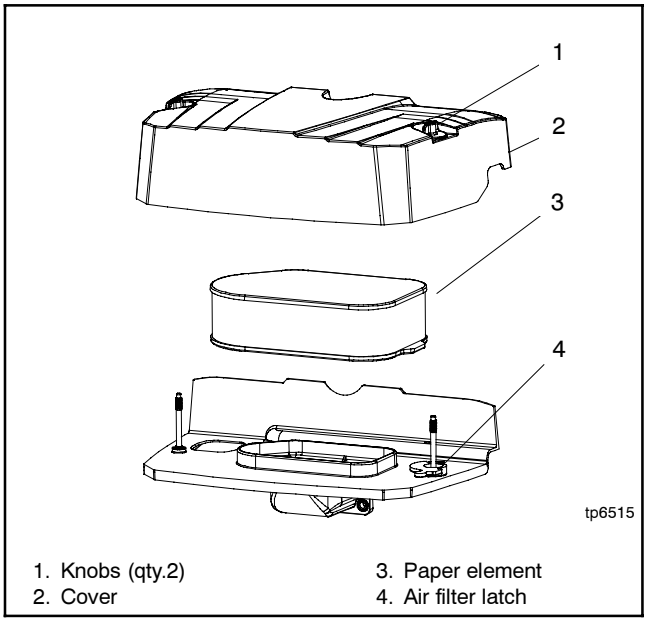

Figure 3-8 Air Cleaner Components

Check the air cleaner daily or before starting the engine. Check for a buildup of dirt and debris around the air cleaner system. Keep this area clean. Also check for loose or damaged components. Replace all bent or damaged air cleaner components.

Note: Operating the engine with loose or damaged air cleaner components could allow unfiltered air into the engine causing premature wear and failure.

Paper Element Service

Replace the paper element at the intervals indicated in the service schedule. See Section 3.1.2 for the service schedule. See Figure 3-8 for the air cleaner components.

1. Loosen the two cover retaining knobs and remove the cover.
2. Rotate the air filter latch counterclockwise to unlock, then remove the paper element.
3. Do not wash the paper element or use pressurized air, as this will damage the element. Replace a dirty, bent, or damaged element. Handle new elements carefully; do not use if the sealing surfaces are bent or damaged.
4. When servicing the air cleaner, check the air cleaner base and latch. Make sure it is secured and not bent or damaged. Also, check the element cover for damage or improper fit. Replace all damaged air cleaner components.

Note: If any loose dirt or debris fell on the air cleaner base when the element was removed, carefully remove it and wipe the base clean. Be careful that none of it drops into the intake throat.

5. Reinstall the paper element onto the air cleaner base. Make sure the element is flat and properly seated. Rotate the latch clockwise, over the molded lip on the element.
6. Install the air cleaner cover and secure with the two retaining knobs.
7. When element replacement is necessary, order genuine Kohler parts.

3.5 Cooling System

The engine fan draws cooling air through the openings in the sides and end near the battery. The alternator fan draws cooling air through openings on the side walls of the enclosure. The cooling air mixes with the engine exhaust and is discharged at the exhaust outlet. See Figure 3-9. To prevent generator set damage caused by overheating, keep the housing cooling inlets and outlets clean and unobstructed at all times.

Note: Do not block the generator set cooling air inlets or mount other equipment above them. Overheating and severe generator damage may occur.

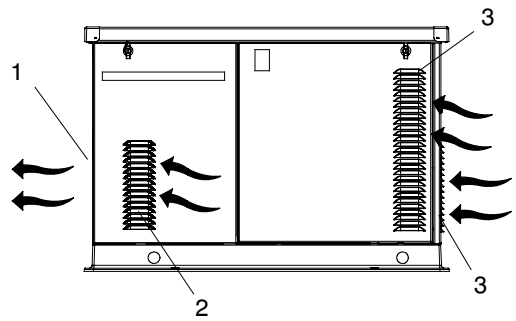

1. Exhaust outlet
2. Alternator air intake (both sides)
3. Engine air intake

Figure 3-9 Cooling Air Intake and Exhaust

3.6 Exhaust System

Remove all combustible materials from the exhaust location. Combustible materials include building materials as well as natural surroundings. Keep dry field grass, foliage, and combustible landscaping material a minimum of 1.5 m (5 ft.) from the exhaust outlet.

Periodically inspect the exhaust system components for cracks, leaks, and corrosion.

- Check for corroded or broken metal parts and replace them as needed.
- Check that the exhaust outlet is clear.

3.7 Battery

⚠ WARNING

Sulfuric acid in batteries.
Can cause severe injury or death.

Wear protective goggles and clothing. Battery acid may cause blindness and burn skin.

Battery electrolyte is a diluted sulfuric acid. Battery acid can cause severe injury or death. Battery acid can cause blindness and burn skin. Always wear splashproof safety goggles, rubber gloves, and boots when servicing the battery. Do not open a sealed battery or mutilate the battery case. If battery acid splashes in the eyes or on the skin, immediately flush the affected area for 15 minutes with large quantities of clean water. Seek immediate medical aid in the case of eye contact. Never add acid to a battery after placing the battery in service, as this may result in hazardous spattering of battery acid.

Battery acid cleanup. Battery acid can cause severe injury or death. Battery acid is electrically conductive and corrosive. Add 500 g (1 lb.) of bicarbonate of soda (baking soda) to a container with 4 L (1 gal.) of water and mix the neutralizing solution. Pour the neutralizing solution on the spilled battery acid and continue to add the neutralizing solution to the spilled battery acid until all evidence of a chemical reaction (foaming) has ceased. Flush the resulting liquid with water and dry the area.

Battery gases. Explosion can cause severe injury or death. Battery gases can cause an explosion. Do not smoke or permit flames or sparks to occur near a battery at any time, particularly when it is charging. Do not dispose of a battery in a fire. To prevent burns and sparks that could cause an explosion, avoid touching the battery terminals with tools or other metal objects. Remove all jewelry before servicing the equipment. Discharge static electricity from your body before touching batteries by first touching a grounded metal surface away from the battery. To avoid sparks, do not disturb the battery charger connections while the battery is charging. Always turn the battery charger off before disconnecting the battery connections. Ventilate the compartments containing batteries to prevent accumulation of explosive gases.

Battery short circuits. Explosion can cause severe injury or death. Short circuits can cause bodily injury and/or equipment damage. Disconnect the battery before generator set installation or maintenance. Remove all jewelry before servicing the equipment. Use tools with insulated handles. Remove the negative (–) lead first when disconnecting the battery. Reconnect the negative (–) lead last when reconnecting the battery. Never connect the negative (–) battery cable to the positive (+) connection terminal of the starter solenoid. Do not test the battery condition by shorting the terminals together.

Refer to this section for general battery information and maintenance. Also consult the battery manufacturer's instructions for battery maintenance.

All generator set models use a negative ground with a 12-volt engine electrical system. Consult the generator set nameplate for the engine electrical system voltage. Consult the generator spec sheet for battery capacity recommendations for replacement purposes. Wiring diagrams provide battery connection information. See Figure 3-10 for typical battery connections.

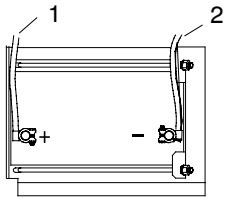

1. To positive (+) terminal on starter solenoid.
2. To ground (–) terminal on or near starter motor.

Figure 3-10 12-Volt Engine Electrical System Single Starter Motor, Typical Battery Connection

Clean the battery and cables and tighten battery terminals using the service schedule recommendations. To prevent corrosion, maintain tight, dry electrical connections at the battery terminals. To remove corrosion from battery terminals, disconnect the cables from the battery and scrub the terminals with a wire brush. Clean the battery and cables with a solution of baking soda and water. After cleaning, flush the battery and cables with clean water and wipe them with a dry, lint-free cloth.

After reconnecting the battery cables, coat the battery terminals with petroleum jelly, silicone grease, or other nonconductive grease.

3.8 Battery Charger

The generator set is equipped with a battery charger to maintain the engine starting battery. The charger's DC leads are factory-wired. Periodically check and tighten all connections.

See Section 2.7, Battery Charger.

3.9 Circuit Protection

If the generator set circuit breaker trips or the fuses blow repeatedly, see Section 4, Troubleshooting, for possible causes.

3.9.1 Line Circuit Breaker

A line circuit breaker interrupts the generator output in the event of a fault in the wiring between the generator and the load. The line circuit breaker location is shown in Figure 1-2. The circuit breaker rating is shown in Figure 3-11. If the circuit breaker trips, reduce the load and switch the breaker back to the ON position. With the breaker in the OFF position the generator set runs but the generator output is disconnected from the load.

Model	Circuit Breaker Rating, Amp
8.5RES	40
12RES	50
12TRES	20
17RES	70
18RES	80
18TRES	25

Figure 3-11 Line Circuit Breaker Rating

3.9.2 Fuses

Three panel-mounted fuses protect the alternator and electrical controls. See Section 1.5 for fuse locations. Another 10-amp fuse protects the battery charger.

See Figure 3-12 for fuse part numbers. Always identify and correct the cause of a blown fuse before restarting the generator set. Refer to Section 4, Troubleshooting, for conditions that may indicate a blown fuse. Replace blown fuses with identical replacement parts.

Fuse	Rating, Amp	Label	Part Number
Auxiliary winding	20	F1	292937
Relay interface board	10	F2	223316
Controller	10	F3	223316
Battery charger (RES)	10	—	223316

Figure 3-12 Fuses

3.10 Storage Procedure

Perform the following storage procedure before removing the generator set from service for three months or longer. Follow the engine manufacturer's recommendations for storage, if available.

Note: Run the generator set monthly whenever possible.

3.10.1 Lubricating System

1. Operate the generator set until it reaches operating temperature, or about 15 minutes.
2. Stop the generator set.
3. While the engine is still warm, drain the engine lubrication oil from the engine crankcase.
4. Refill engine crankcase with oil. See Section 3.2.3 for oil recommendations.
5. Run the generator set for a few minutes to distribute the clean oil.
6. Stop the generator set.

3.10.2 Fuel System

1. Start the generator set.
2. With the generator set running, shut off the gas supply.
3. Run the generator set until the engine stops.
4. Place the generator set master switch in the OFF/ RESET position.

3.10.3 Cylinder Lubrication

1. Remove the spark plugs.
2. Pour one tablespoon of engine oil into each spark plug hole. Install the spark plugs and *ground* the spark plug leads. *Do not connect the leads to the plugs.*
3. Toggle the generator set master switch to crank the engine two or three revolutions to lubricate the cylinders.

3.10.4 Exterior Preparation

1. Clean the exterior surface of the generator set.
2. Seal all openings in the engine with nonabsorbent adhesive tape.
3. Mask all areas to be used for electrical contact.
4. Spread a light film of oil over unpainted metallic surfaces to prevent rust and corrosion.

3.10.5 Battery

Perform battery storage last.

1. Place the generator set master switch in the OFF/ RESET position.
2. Disconnect the battery, negative (–) lead first.
3. Clean the battery.
4. Place the battery in a warm, dry location.
5. Connect the battery to a float/equalize battery charger, or charge the battery monthly using a trickle charger. Follow the battery charger manufacturer's recommendations.

Notes

4.1 Introduction

Use the following charts to diagnose and correct common problems. First check for simple causes such as a dead engine starting battery, loose connections, or an open circuit breaker. The charts include a list of common problems, possible causes of the problem, and recommended corrective actions.

If the procedures in this manual do not explain how to correct the problem, contact an authorized distributor/dealer. Maintain a record of repairs and adjustments performed on the equipment. Use the record to help describe the problem and repairs or adjustments made to the equipment.

4.2 Controller Troubleshooting

Figure 4-1 contains troubleshooting, diagnostic, and repair information for the ADC-RES controller.

4.3 Generator Set Troubleshooting

Figure 4-2 contains generator set troubleshooting, diagnostic, and repair information. Check for loose connections before replacing parts.

Fault Codes

The Advanced Digital Control displays fault codes to aid in troubleshooting. Fault codes, descriptions, and recommended actions are listed in Section 2.6.

If a fault code is displayed, identify and correct the cause of the fault condition. Then reset the controller. See Section 2.6.3.

Problem	Possible Cause	Corrective Action
Controller LED display is off	No power to the controller:	
	Controller fuse (F3) is blown.	Replace the fuse. If the fuse blows again, contact an authorized distributor/dealer.
	Low or no battery voltage.	Check connections. Check the engine starting battery and battery charger. See Figure 4-3.
	Generator set master switch is in the OFF/RESET position.	Move generator set master switch to the AUTO or RUN position. In AUTO, the display will not turn on until the first start command is received.
	The controller is in sleep mode. See Section 2.4.2.	Controller display will activate when a remote start command is received or the generator set master switch is moved to the RUN position. Use the remote switch to start generator set and activate the controller display, if desired. See Section 2.4. Controllers with application code version 1.13 or higher can be configured to enable or disable the sleep mode. See the generator set Installation Manual for instructions.

Figure 4-1 ADC-RES Troubleshooting Chart

Problem	Possible Cause	Corrective Action
The generator set does not crank.	Fault shutdown	Check for a fault code on the controller display. See Section 2.6.
	Battery weak or dead	Check power to the battery charger. Recharge or replace the battery.
	Battery charger fuse blown	Replace the fuse. Contact an authorized distributor/ dealer for service if fuse blows repeatedly.
	Battery connections reversed or poor	Check the connections.
	Fuse F2 blown	Replace the fuse. Contact an authorized distributor/ dealer for service if fuse blows repeatedly.
	Fuse F3 blown	Replace the fuse. Contact an authorized distributor/ dealer for service if fuse blows repeatedly.
	Generator set master switch in the OFF position	Move the master switch to AUTO for remote start or to RUN for local start.
The generator set cranks but does not start, starts hard, lacks power, or operates erratically.	Air cleaner clogged	Clean and/or replace the air cleaner.
	Battery weak or dead	Check power to the battery charger. Recharge or replace the battery.
	Battery connection poor	Clean and tighten the battery connections.
	Spark plug wire connection loose	Check the spark plug wires.
	Low oil pressure shutdown	Check the oil level.
	Fuel pressure insufficient	Check the fuel supply and valves.
	Engine malfunction	Contact an authorized distributor/dealer.
No AC output.	AC circuit breaker in the OFF position	Place the circuit breaker in the ON position.
	AC circuit breaker tripping because of overload	Reduce the load on the generator set.
	AC circuit breaker tripping because of short circuit	Contact an authorized distributor/dealer for service.
	Auxiliary winding fuse (F1) blown	Replace the fuse. Contact an authorized distributor/ dealer for service if fuse blows repeatedly.
Low output or excessive drop in voltage.	Generator set overloaded	Reduce the load.
Generator set stops suddenly.	Low oil pressure shutdown	Check the oil level. Check for signs of oil leaks.
	Out of fuel	Check fuel supply.
	Overcrank shutdown	Reset the controller. If the overcrank fault occurs again, contact an authorized distributor/dealer.
	Controller fuse (F3) blown	Replace the fuse. If the fuse blows again, contact an authorized distributor/dealer.
	Overspeed shutdown	Reset the controller. If the overspeed fault occurs again, contact an authorized distributor/dealer.
	Generator set master switch in the OFF/RESET position	Move the switch to the correct position (RUN or AUTO).
	Remote stop command received from a remote switch or ATS	Check the remote switch position.
	Engine malfunction	Contact an authorized distributor/dealer.
	Auxiliary winding fuse (F1) blown	Replace the fuse. Contact an authorized distributor/dealer for service if fuse blows repeatedly.

Figure 4-2 General Troubleshooting Chart

4.4 Battery Charger Troubleshooting

Use the battery charger's LED indicators and the table in Figure 4-3 or Figure 4-4 to troubleshoot battery charger operation problems.

Problem	Cause	Solution
Red LED stays on for more than 24 hours	One or more inoperative or damaged cells.	Load test the battery and replace, if necessary
	Battery charger has reduced its output voltage below the normal level due to a DC overload or a DC short.	Remove the source of the overload or short. Disconnect the battery charger's black (NEGATIVE) ring terminal from the battery. Reapply AC power and the green LED only should now light.
	Onboard DC systems are drawing more current than the battery charger can replace.	Turn off all DC equipment while charging.
Red and green LEDs stay on for more than 24 hours	Onboard DC systems are drawing between 1.5 and 5 amps.	Turn off all DC equipment while charging.
	One or more inoperative or damaged cells.	Load test the battery and replace, if necessary
	Extremely low AC voltage at the battery charger.	Apply a higher AC voltage source or reduce the length of the extension cord.
Green LED stays on when the battery is known to be low	Open DC output fuse.	Replace AGS-10 fuse.
	Faulty or contaminated terminal connections.	Clean and tighten or repair all terminal connections.
	One or more inoperative or damaged cells.	Load test the battery and replace, if necessary.
Neither of the LEDs turn on when the AC power is applied	No AC power available at the battery charger.	Connect AC power or reset the AC breaker on the main panel.
	Component failure.	Replace battery charger.

Figure 4-3 6-Amp Battery Charger Troubleshooting (for single-phase models)

Problem	Cause	Solution
Green LED is off and there is no output voltage.	No power to the battery charger.	Check the power supply to the charger. Check the upstream circuit breakers and fuses. Check fuse FS (1A-T) inside the battery charger.
Abnormal low voltage, charger is operating.	The battery completely discharged and the charger is operating at the current limit.	Disconnect the battery and verify that the charger output is 13.2 VDC. Reconnect the charger and allow time for the battery to recharge. The battery voltage should rise gradually. Test the battery.
The battery is discharged, but the charger has power and is operating.	Blown fuse.	Check the 5-amp fuse F2 (5A-T) *inside* the battery charger and replace if necessary. Check inline fuse F4 and replace if necessary.

Figure 4-4 2.5-Amp Battery Charger Troubleshooting (for three-phase models)

Notes

Appendix A Abbreviations

The following list contains abbreviations that may appear in this publication.

A, amp	ampere
ABDC	after bottom dead center
AC	alternating current
A/D	analog to digital
ADC	advanced digital control; analog to digital converter
adj.	adjust, adjustment
ADV	advertising dimensional drawing
Ah	amp-hour
AHWT	anticipatory high water temperature
AISI	American Iron and Steel Institute
ALOP	anticipatory low oil pressure
alt.	alternator
Al	aluminum
ANSI	American National Standards Institute (formerly American Standards Association, ASA)
AO	anticipatory only
APDC	Air Pollution Control District
API	American Petroleum Institute
approx.	approximate, approximately
APU	Auxiliary Power Unit
AQMD	Air Quality Management District
AR	as required, as requested
AS	as supplied, as stated, as suggested
ASE	American Society of Engineers
ASME	American Society of Mechanical Engineers
assy.	assembly
ASTM	American Society for Testing Materials
ATDC	after top dead center
ATS	automatic transfer switch
auto.	automatic
aux.	auxiliary
avg.	average
AVR	automatic voltage regulator
AWG	American Wire Gauge
AWM	appliance wiring material
bat.	battery
BBDC	before bottom dead center
BC	battery charger, battery charging
BCA	battery charging alternator
BCI	Battery Council International
BDC	before dead center
BHP	brake horsepower
blk.	black (paint color), block (engine)
blk. htr.	block heater
BMEP	brake mean effective pressure
bps	bits per second
br.	brass
BTDC	before top dead center
Btu	British thermal unit
Btu/min.	British thermal units per minute
C	Celsius, centigrade
cal.	calorie
CAN	controller area network
CARB	California Air Resources Board
CAT5	Category 5 (network cable)
CB	circuit breaker
CC	crank cycle
cc	cubic centimeter
CCA	cold cranking amps
ccw.	counterclockwise
CEC	Canadian Electrical Code
cert.	certificate, certification, certified
cfh	cubic feet per hour
cfm	cubic feet per minute
CG	center of gravity
CID	cubic inch displacement
CL	centerline
cm	centimeter
CMOS	complementary metal oxide substrate (semiconductor)
com	communications (port)
coml	commercial
Coml/Rec	Commercial/Recreational
conn.	connection
cont.	continued
CPVC	chlorinated polyvinyl chloride
crit.	critical
CSA	Canadian Standards Association
CT	current transformer
Cu	copper
cUL	Canadian Underwriter's Laboratories
CUL	Canadian Underwriter's Laboratories
cu. in.	cubic inch
cw.	clockwise
CWC	city water-cooled
cyl.	cylinder
D/A	digital to analog
DAC	digital to analog converter
dB	decibel
dB(A)	decibel (A weighted)
DC	direct current
DCR	direct current resistance
deg., °	degree
dept.	department
dia.	diameter
DI/EO	dual inlet/end outlet
DIN	Deutsches Institut fur Normung e. V. (also Deutsche Industrie Normenausschuss)
DIP	dual inline package
DPDT	double-pole, double-throw
DPST	double-pole, single-throw
DS	disconnect switch
DVR	digital voltage regulator
E^2PROM, EEPROM	electrically-erasable programmable read-only memory
E, emer.	emergency (power source)
ECM	electronic control module, engine control module
EDI	electronic data interchange
EFR	emergency frequency relay
e.g.	for example *(exempli gratia)*
EG	electronic governor
EGSA	Electrical Generating Systems Association
EIA	Electronic Industries Association
EI/EO	end inlet/end outlet
EMI	electromagnetic interference
emiss.	emission
eng.	engine
EPA	Environmental Protection Agency
EPS	emergency power system
ER	emergency relay
ES	engineering special, engineered special
ESD	electrostatic discharge
est.	estimated
E-Stop	emergency stop
etc.	et cetera (and so forth)
exh.	exhaust
ext.	external
F	Fahrenheit, female
FHM	flat head machine (screw)
fl. oz.	fluid ounce
flex.	flexible
freq.	frequency
FS	full scale
ft.	foot, feet
ft. lb.	foot pounds (torque)
ft./min.	feet per minute
ftp	file transfer protocol
g	gram
ga.	gauge (meters, wire size)
gal.	gallon
gen.	generator
genset	generator set
GFI	ground fault interrupter
GND, ⏚	ground
gov.	governor
gph	gallons per hour
gpm	gallons per minute
gr.	grade, gross
GRD	equipment ground
gr. wt.	gross weight
H x W x D	height by width by depth
HC	hex cap
HCHT	high cylinder head temperature
HD	heavy duty
HET	high exhaust temp., high engine temp.
hex	hexagon
Hg	mercury (element)
HH	hex head
HHC	hex head cap
HP	horsepower
hr.	hour
HS	heat shrink
hsg.	housing
HVAC	heating, ventilation, and air conditioning
HWT	high water temperature
Hz	hertz (cycles per second)
IBC	International Building Code
IC	integrated circuit
ID	inside diameter, identification
IEC	International Electrotechnical Commission
IEEE	Institute of Electrical and Electronics Engineers
IMS	improved motor starting
in.	inch
in. H_2O	inches of water
in. Hg	inches of mercury
in. lb.	inch pounds
Inc.	incorporated
ind.	industrial
int.	internal
int./ext.	internal/external
I/O	input/output
IP	internet protocol
ISO	International Organization for Standardization
J	joule
JIS	Japanese Industry Standard
k	kilo (1000)
K	kelvin
kA	kiloampere
KB	kilobyte (2^{10} bytes)
KBus	Kohler communication protocol
kg	kilogram

kg/cm^2	kilograms per square centimeter
kgm	kilogram-meter
kg/m^3	kilograms per cubic meter
kHz	kilohertz
kJ	kilojoule
km	kilometer
kOhm, kΩ	kilo-ohm
kPa	kilopascal
kph	kilometers per hour
kV	kilovolt
kVA	kilovolt ampere
kVAR	kilovolt ampere reactive
kW	kilowatt
kWh	kilowatt-hour
kWm	kilowatt mechanical
kWth	kilowatt-thermal
L	liter
LAN	local area network
L x W x H	length by width by height
lb.	pound, pounds
lbm/ft^3	pounds mass per cubic feet
LCB	line circuit breaker
LCD	liquid crystal display
LED	light emitting diode
Lph	liters per hour
Lpm	liters per minute
LOP	low oil pressure
LP	liquefied petroleum
LPG	liquefied petroleum gas
LS	left side
L_{wa}	sound power level, A weighted
LWL	low water level
LWT	low water temperature
m	meter, milli (1/1000)
M	mega (10^6 when used with SI units), male
m^3	cubic meter
m^3/hr.	cubic meters per hour
m^3/min.	cubic meters per minute
mA	milliampere
man.	manual
max.	maximum
MB	megabyte (2^{20} bytes)
MCCB	molded-case circuit breaker
MCM	one thousand circular mils
meggar	megohmmeter
MHz	megahertz
mi.	mile
mil	one one-thousandth of an inch
min.	minimum, minute
misc.	miscellaneous
MJ	megajoule
mJ	millijoule
mm	millimeter
mOhm, mΩ	milliohm
MOhm, MΩ	megohm
MOV	metal oxide varistor
MPa	megapascal
mpg	miles per gallon
mph	miles per hour
MS	military standard
ms	millisecond
m/sec.	meters per second
mtg.	mounting
MTU	Motoren-und Turbinen-Union
MW	megawatt
mW	milliwatt
μF	microfarad
N, norm.	normal (power source)
NA	not available, not applicable
nat. gas	natural gas
NBS	National Bureau of Standards
NC	normally closed
NEC	National Electrical Code
NEMA	National Electrical Manufacturers Association
NFPA	National Fire Protection Association
Nm	newton meter
NO	normally open
no., nos.	number, numbers
NPS	National Pipe, Straight
NPSC	National Pipe, Straight-coupling
NPT	National Standard taper pipe thread per general use
NPTF	National Pipe, Taper-Fine
NR	not required, normal relay
ns	nanosecond
OC	overcrank
OD	outside diameter
OEM	original equipment manufacturer
OF	overfrequency
opt.	option, optional
OS	oversize, overspeed
OSHA	Occupational Safety and Health Administration
OV	overvoltage
oz.	ounce
p., pp.	page, pages
PC	personal computer
PCB	printed circuit board
pF	picofarad
PF	power factor
ph., ∅	phase
PHC	Phillips® head Crimptite® (screw)
PHH	Phillips® hex head (screw)
PHM	pan head machine (screw)
PLC	programmable logic control
PMG	permanent magnet generator
pot	potentiometer, potential
ppm	parts per million
PROM	programmable read-only memory
psi	pounds per square inch
psig	pounds per square inch gauge
pt.	pint
PTC	positive temperature coefficient
PTO	power takeoff
PVC	polyvinyl chloride
qt.	quart, quarts
qty.	quantity
R	replacement (emergency) power source
rad.	radiator, radius
RAM	random access memory
RDO	relay driver output
ref.	reference
rem.	remote
Res/Coml	Residential/Commercial
RFI	radio frequency interference
RH	round head
RHM	round head machine (screw)
rly.	relay
rms	root mean square
rnd.	round
RO	read only
ROM	read only memory
rot.	rotate, rotating
rpm	revolutions per minute
RS	right side
RTDs	Resistance Temperature Detectors
RTU	remote terminal unit
RTV	room temperature vulcanization
RW	read/write
SAE	Society of Automotive Engineers
scfm	standard cubic feet per minute
SCR	silicon controlled rectifier
s, sec.	second
SI	*Systeme international d'unites,* International System of Units
SI/EO	side in/end out
sil.	silencer
SMTP	simple mail transfer protocol
SN	serial number
SNMP	simple network management protocol
SPDT	single-pole, double-throw
SPST	single-pole, single-throw
spec	specification
specs	specification(s)
sq.	square
sq. cm	square centimeter
sq. in.	square inch
SMS	short message service
SS	stainless steel
std.	standard
stl.	steel
tach.	tachometer
TB	terminal block
TCP	transmission control protocol
TD	time delay
TDC	top dead center
TDEC	time delay engine cooldown
TDEN	time delay emergency to normal
TDES	time delay engine start
TDNE	time delay normal to emergency
TDOE	time delay off to emergency
TDON	time delay off to normal
temp.	temperature
term.	terminal
THD	total harmonic distortion
TIF	telephone influence factor
tol.	tolerance
turbo.	turbocharger
typ.	typical (same in multiple locations)
UF	underfrequency
UHF	ultrahigh frequency
UIF	user interface
UL	Underwriter's Laboratories, Inc.
UNC	unified coarse thread (was NC)
UNF	unified fine thread (was NF)
univ.	universal
URL	uniform resource locator (web address)
US	undersize, underspeed
UV	ultraviolet, undervoltage
V	volt
VAC	volts alternating current
VAR	voltampere reactive
VDC	volts direct current
VFD	vacuum fluorescent display
VGA	video graphics adapter
VHF	very high frequency
W	watt
WCR	withstand and closing rating
w/	with
WO	write only
w/o	without
wt.	weight
xfmr	transformer

KOHLER®
POWER SYSTEMS

KOHLER CO. Kohler, Wisconsin 53044
Phone 920-565-3381, Fax 920-459-1646
For the nearest sales/service outlet in the
US and Canada, phone 1-800-544-2444
KohlerPower.com

Kohler Power Systems
Asia Pacific Headquarters
7 Jurong Pier Road
Singapore 619159
Phone (65) 6264-6422, Fax (65) 6264-6455

TP-6515 9/09d

© 2007, 2008, 2009 by Kohler Co. All rights reserved.

APPENDIX F
MIDNITE MINE SITE SPILL PREVENTION CONTROL AND COUNTERMEASURES PLAN

Spill Prevention, Control and Countermeasure Plan for the Midnite Mine Water Treatment Plant for the Phase I RD/RA: Interim Water Management for Midnite Mine

Revision 1

Prepared for:

Dawn Mining Company

P.O. Box 250
Ford, Washington 99013

and

Newmont USA Limited

6363 S. Fiddler's Green Circle
Greenwood Village, Colorado 80111

Prepared by:

Tetra Tech

3801 Automation Way, Suite 100
Fort Collins, Colorado 80525
(970) 223-9600
Fax (970) 223-7171
Tetra Tech Project No. 114-181850

May 5, 2009

DISTRIBUTION LIST

Recipient Name	Organization
Ellen Hale	U.S. Environmental Protection Agency
Randy Connolly	Spokane Tribe of Indians
John Mudge	Dawn Mining Company/Newmont USA Ltd.
Robert Nelson	Dawn Mining Company
Gerald Cates	Dawn Mining Company
Jan Johnson	Tetra Tech

TABLE OF CONTENTS

1.0 INTRODUCTION 1
2.0 GENERAL INFORMATION 2
3.0 MATERIAL AND WASTE INVENTORY 9
4.0 SPILL CONTAINMENT, PREVENTION, AND RESPONSE 11
4.1 Good Housekeeping 11
4.2 Spill Prevention and Response 11
4.3 Spill Response Actions 13
4.3.1 Hydrated Lime Spill 13
4.3.2 Sulfuric Acid Spill Response Action 14
4.3.3 Flocculant Spill Response Actions 14
4.3.4 Barium Chloride Spill Response Action 15
4.3.5 Anti-Scalant Spill Response Action 15
4.3.6 Process Solution Spill Response Action 16
4.3.7 Fuels Spills Response Actions 17
4.3.8 Sludge Spill Inside the Plant 18
4.4 Cleanup 18
4.5 Monitoring 18
5.0 GENERAL EMERGENCY PROCEDURES 19
6.0 EMPLOYEE TRAINING 21
7.0 PREVENTATIVE MAINTENANCE AND INSPECTIONS 22
8.0 SECURITY 23
REFERENCES 24

LIST OF FIGURES

Figure 2-1. Midnite Mine Site Location Map 6
Figure 2-2. Dawn Mining Company Plant Layout 7
Figure 2-3. Dawn Mining Company Plant Location 8

LIST OF TABLES

Table 2-1. Operator Spill Responses 3
Table 2-2. Emergency Response Team Spill Response 5
Table 3-1. Material and Waste Inventory 9
Table 4-1. Overflowing Tank Sump Pump Discharge Locations 12

LIST OF ATTACHMENTS

Attachment A: MSDS Sheets

1.0 INTRODUCTION

This Spill Prevention, Control, and Countermeasures (SPCC) Plan has been prepared for the Midnite Mine Water Treatment Plant (WTP) as part of the Contingency Plan as required by U.S. Environmental Protection Agency (EPA) Title 40 CFR Part 109. This plan has been prepared in accordance with good engineering practices, and has the full approval of management at a level of authority to commit the necessary resources for implementation. This plan discusses the design and operating measures practiced to prevent the discharge of harmful quantities of oil, hazardous substances (HS), extremely hazardous substances (EHS), or hazardous waste (HW) into the environment in accordance with the following regulations promulgated by the EPA and identified in Title 40 CFR:

Part 112 – Oil Pollution Prevention
Part 116 – Designation of Hazardous Substances
Part 264 – Hazardous Waste
Part 302 – Designation, Reportable Quantities, and Notification (CERCLA)
Part 355 – Emergency Planning and Notification (SARA)

Oil, HS, EHS, and/or HW releases, regardless of location, size, and reason for the release create situations which must be handled swiftly and efficiently. The purpose of this SPCC Plan is:

1. To prevent spills of oil, HS, EHS, and HW
2. To prepare plant personnel for releases of these materials
3. To aid in the orderly and efficient containment and recovery of all types of releases
4. To indicate the proper procedure for reporting such releases

The plan discusses potential spills, materials and waste inventory, spill containment and prevention, and general emergency procedures. The provisions of this plan will be carried out immediately whenever there is a spill at the Midnite Mine Water Treatment plant (WTP) which could threaten human health or the environment.

Dawn Mining Company (DMC) implements a Best Management Practices (BMP) Plan (SMI, 1996) at the site that includes measures to prevent or minimize the potential for the release of pollutants from the WTP to waters of the United States. This SPCC plan replaces the BMP Plan (SMI, 1996).

Copies of the SPCC Plan as part of the Contingency Plan will be distributed to the persons listed on the distribution list. Robert Nelson, Site Manager, will be responsible for distributing copies of the plan to local police departments, fire departments, hospitals, and state and local emergency response teams. Copies of the plan will also be maintained at the Midnite Mine WTP. EPA and emergency response teams will be instructed on the facility layout and operation, potential hazards, places where facility personnel would normally be working, entrances and exits, and possible evacuation routes.

Copies of this plan will be updated if improvements are made or information changes.

2.0 GENERAL INFORMATION

The Midnite Mine Water Treatment Plant is located approximately 25 miles northwest of the town of Ford, Washington. The location is shown in Figure 2-1. A general plant layout is provided in Figure 2-2.

The Midnite Mine is an inactive mining facility. The only operations carried out at the mine site by Dawn Mining Company (DMC) consist of activities associated with the seasonal treatment of water contained in open mine Pit Number 3 (see Figure 2-3). Most of the storm water that comes in contact with the treatment plant area flows into the Blood Pool, or to the Blood Pool pumpback station (see Figure 2-3). From these areas, the stormwater is pumped into Pit No. 3. The rest of the storm water that comes in contact with the treatment plant area either flows directly into Pit No. 3, evaporates, or drains to the ground. Water from Pit No. 3 is pumped to the WTP for treatment and eventually discharged to Blue Creek.

The activities at the WTP require only a few employees to be present at the mine site, and then only during approximately seven months of the year when the treatment plant is operational.

The Midnite Mine WTP precipitates metals from the influent aqueous solutions using hydrated lime, barium chloride, and recycled sludge. The final pH of the treated water is adjusted down utilizing sulfuric acid before discharging. This treated, neutralized water is then returned to the natural drainages within the area.

Potential spills from the Midnite Mine WTP include spills of the following materials and/or chemicals:

- Hydrated lime
- Flocculant
- Sulfuric acid
- Diesel fuel
- Lube oil and grease
- Gasoline
- Propane
- Barium chloride
- Anti-Scalant
- Sludge (filter cake)

Should an incident involving a spill of or contact with one of the above materials occur, Table 2-1 includes the immediate attention necessary for contact with skin or eyes, or if the material is inhaled or ingested onsite. Table 2-2 includes information necessary for emergency responders to the scene.

Table 2-1. Operator Spill Responses

Operator Emergency Response		
Chemical	**Method**	**First Aid Response**
Hydrated Lime	Skin	Brush off skin surface, Rinse with lukewarm water for 15 to 20 minutes. Call physician if exposed area is large or if irritation persists.
	Eyes	Immediately rinse with saline solution for 15 to 20 minutes including lifting the upper and lower lids, or water if saline is not available. If embedded particle in the eye, contact a physician.
	Inhalation	Move source of dust or to fresh air. Obtain medical attention immediately.
	Ingestion	Drink 300 ml (10 oz.) of water, followed by diluted vinegar (1 part vinegar, 2 parts water) or fruit juice. Do not induce vomiting. Contact a physician immediately
Flocculant (NS 6852)	Skin	Wash with water and soap. Call physician if irritation persists.
	Eyes	Rinse with water including lifting the upper and lower lids. In case of persistent eye irritation, contact a physician.
	Inhalation	Move source or to fresh air. Contact a physician if irritation persists.
	Ingestion	Product is not considered toxic based on studies on laboratory animals
Sulfuric Acid	Skin	Flush with soap and water for at least 15 minutes. Do not scrub or rub. Seek medical attention immediately.
	Eyes	Flush immediately with water for at least 15 minutes, lifting the upper and lower lids. Seek medical attention immediately.
	Inhalation	Move to fresh air immediately. Seek medical attention immediately.
	Ingestion	Consume large amounts of water or milk. Do not induce vomiting. Seek medical attention immediately.
Diesel fuel	Skin	Wash affected area with soap and water. If irritation develops, consult a physician.
	Eyes	Wash with water for at least 15 minutes, including lifting the upper and lower lids.
	Inhalation	Move to fresh air. Contact a physician if irritation persists.
	Ingestion	Drink two glasses of water. Hold head lower than hips. Do not induce vomiting. Seek medical attention immediately.
Gasoline	Skin	Wash with soap and water. If irritation develops and persists, consult a physician
	Eyes	Immediately flush with water for at least 15 minutes including lifting the upper and lower lids. Contact a physician.
	Inhalation	Move to fresh air. Contact a physician.
	Ingestion	Drink 2 glasses of water. Do not induce vomiting. Contact a physician. Physician may recommend mixing 50 g activated charcoal in 400 ml water and mix well. Consume 5 ml/kg or about 7.7 oz/100 lb.
Propane	Skin	Rinse with water. If freeze burn occurs immerse burned area in warm (not hot) water. Contact a physician if irritation persists.
	Eyes	Flush with water including lifting the upper and lower lids. Obtain medical assistance.
	Inhalation	Move to fresh air. Contact a physician.
	Ingestion	Contact a physician.
Barium Chloride	Skin	Wash with soap and water for at least 15-20 minutes. Contact a physician immediately.
	Eyes	Immediately rinse with saline solution for 15 to 20 minutes including lifting the upper and lower lids, or water if saline is not available. Contact a physician.
	Inhalation	Move to fresh air. Get medical attention immediately.
	Ingestion	Induce vomiting immediately. Get medical attention immediately.

Table 2-1. Operator Spill Responses (continued)

Operator Emergency Response		
Chemical	**Method**	**First Aid Response**
Anti-Scalant (NS 1100)	Skin	Wash with soap and water. If irritation persists, consult a physician.
	Eyes	Rinse with water including lifting the upper and lower lids. If irritation persists, consult a physician.
	Inhalation	Move to fresh air. If irritation persists, consult a physician.
	Ingestion	Do not induce vomiting. If irritation persists, consult a physician.
Sludge or Process Solution	Skin	Rinse with water. Consult a physician.
	Eyes	Rinse with water including lifting the upper and lower lids. Consult a physician.
	Inhalation	Move to fresh air. Consult a physician.
	Ingestion	Consult a physician.

Table 2-2. Emergency Response Team Spill Response

Emergency Response Team	
Chemical	**Special Response Notes**
Hydrated Lime	Do not expose to acids
Flocculant (NS 6852)	Slippery when wet
Sulfuric Acid	Extremely strong acid, neoprene or PVC PPE equipment required. Do not expose to Hydrated Lime or water. Use dry chemical or carbon dioxide extinguishers.
Diesel Fuel	Extremely flammable. Not soluble, recommended dry chemical, foam, carbon dioxide or smothering techniques for putting out fire. Use water spray for cooling fire-exposed containers to prevent pressure rupture, although take caution as cool water on hot metal could cause container rupture.
Gasoline	Extremely flammable. Not soluble. Dry chemical, foam, or carbon dioxide should be used to extinguish fire. Vapor forms explosive mixture with air, water can be used to disperse the vapors. Use water spray for cooling fire-exposed containers, although take caution as cool water on hot metal could cause container rupture.
Propane	Extremely flammable and explosive. Dry chemical, foam, or carbon dioxide fire extinguishers should be used. Stop flow of gas first. Eliminate sources of ignition. Use water spray to cool fire-exposed containers, although take caution as cool water on hot metal could cause container rupture. Vapor is heavier than air and may collect at lower levels.
Barium Chloride	No special response notes.
Anti-Scalant (NS 1100)	Extremely slippery. Dry chemical, foam, or carbon dioxide fire extinguishers should be used.
Sludge or Process Solution	Contact operator to determine which stage of treatment system solution is from before taking action. Respond accordingly to assumed chemical composition.

DMC's leases to the property where the WTP is located were terminated by the Bureau of Indian Affairs in 1991. DMC's compliance with this plan is therefore contingent on its continuing to being given access to the site by the BIA and the Spokane Indian Tribe. DMC notes that there are activities carried out at the mine site by other entities, such as the Spokane Indian Tribe, over which DMC has no control. These entities or individuals also store certain materials at the mine site, and DMC similarly has no authority to control how these materials are stored or used. Thus, DMC is unable to include management of these activities and materials in this plan, and disclaims responsibility for any contribution to runoff that might potentially results from these activities or materials.

E:\181850\Location.dwg SAVED: 1/16/09 PRINTED: 1/16/09 BY: MFGFTCACAD3

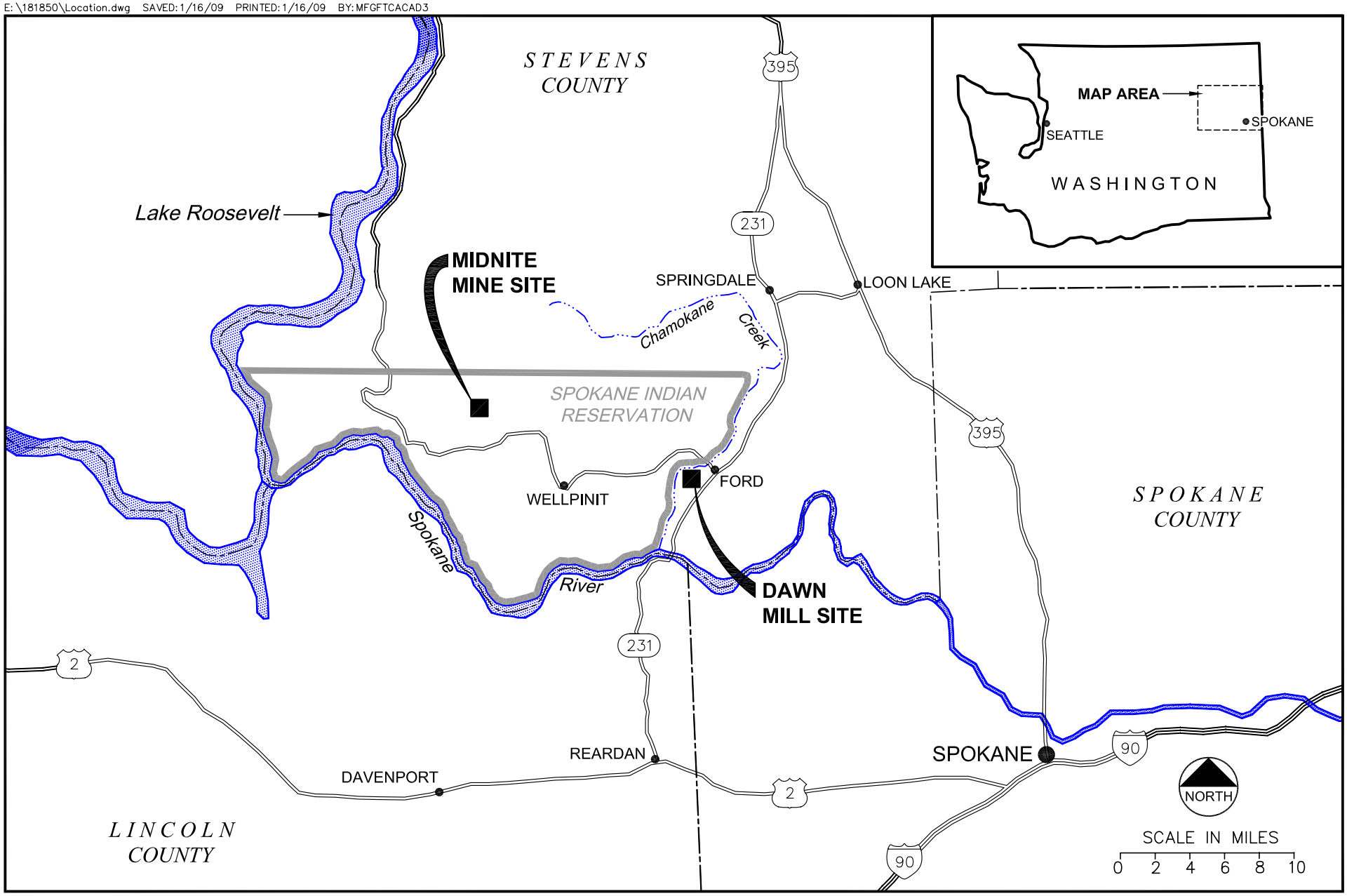

Project No. 181850

January 2009

Figure 2-1
Midnite Mine Site Location Map

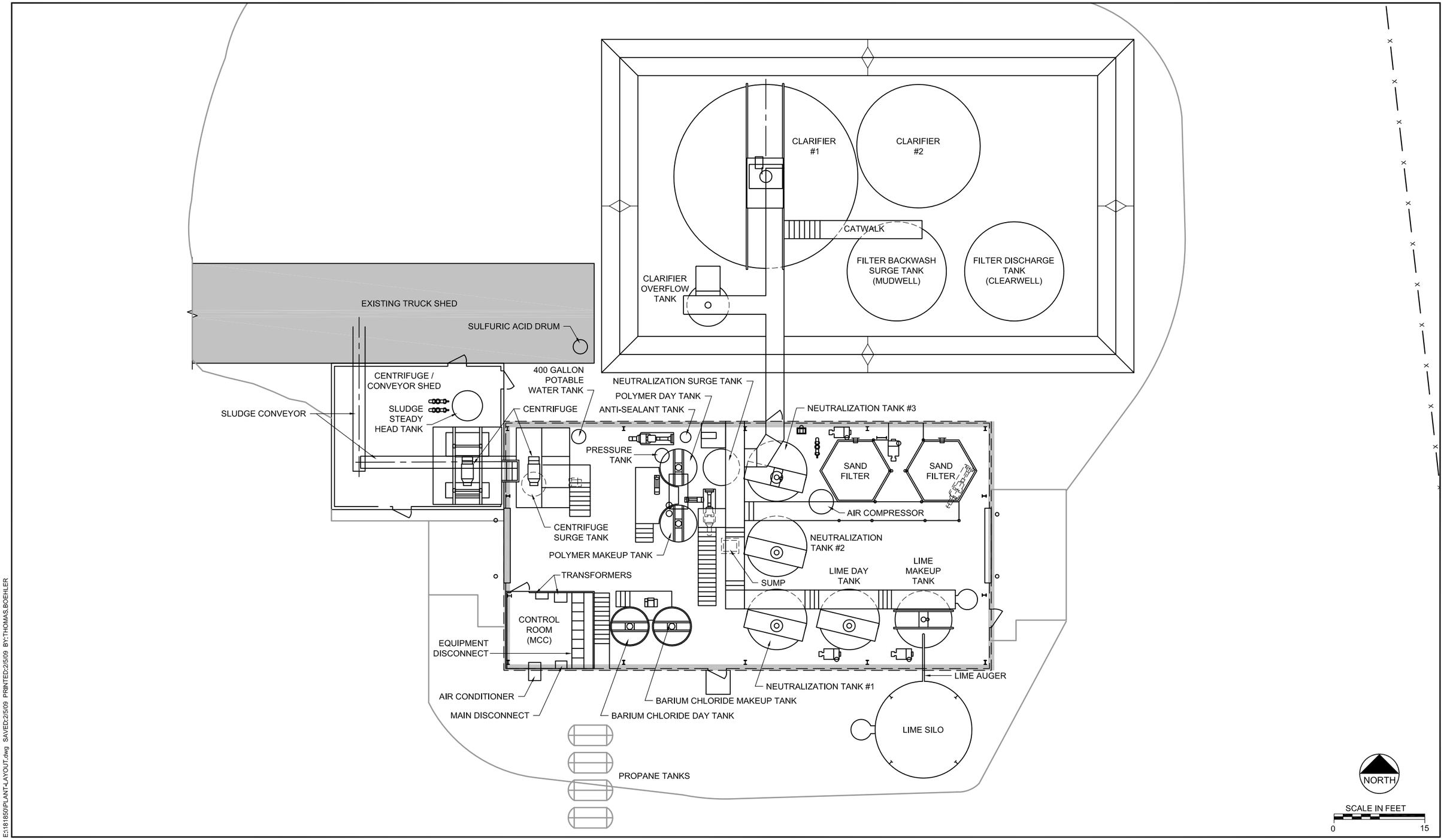

E:\181850\PLANT-LAYOUT.dwg SAVED:2/5/09 PRINTED:2/5/09 BY:THOMAS.BOEHLER

Project No. 181850

January 2009

Figure 2-2
Dawn Mining Company
Plant Layout

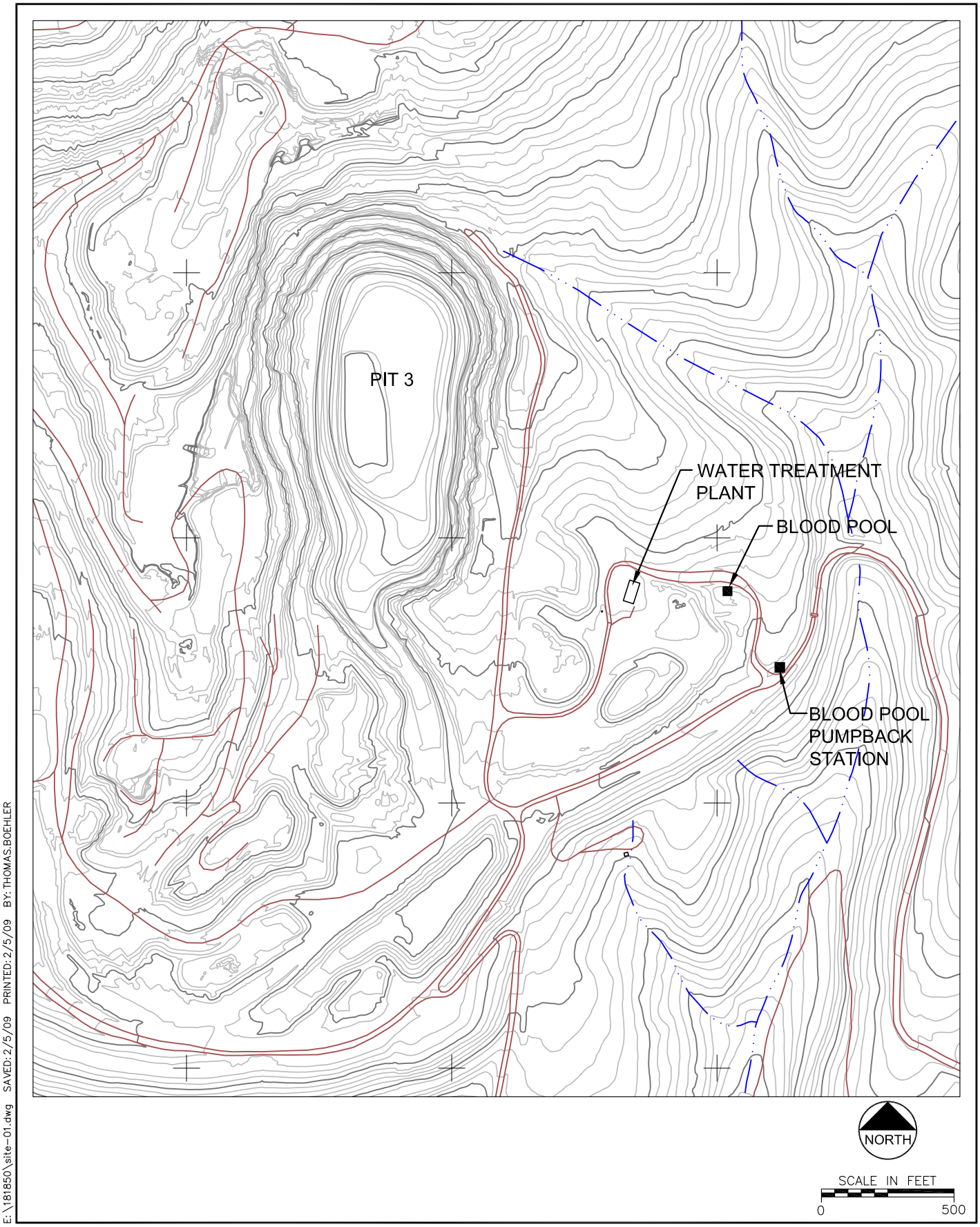

E:\181850\site-01.dwg SAVED: 2/5/09 PRINTED: 2/5/09 BY: THOMAS.BOEHLER

Project No. 181850

February 2009

Figure 2-3
Dawn Mining Company Plant Location

3.0 MATERIAL AND WASTE INVENTORY

During the operation of the Midnite WTP, the facility will store the following materials and associated estimated maximum quantities shown in Table 3-1.

Table 3-1. Material and Waste Inventory

Material	Form	Estimated Maximum Quantity	Reportable Quantity(1)
Hydrated Lime	Dry Bulk	50 tons	100 lbs (2)
Flocculant	Dry Bulk 50# Bags	800 lbs	100 lbs (2)
Sulfuric Acid	Bulk Liquid	100 gal (1,535 lbs)	1000 lbs
Diesel Fuel	Bulk Liquid	300 gal	504 gal
Lube Oil and Grease	Tube and Quart Containers	15 gal oil, 170 ounces grease	100 lbs (2)
Gasoline	Bulk Liquid	300 gal storage tank	32 gal
Propane	Bulk Liquid	3000 gal	10 lbs
Barium Chloride	Dry Bulk 50# Bags	500 gal	100 lbs (2)
Anti-Scalant	Bulk Liquid 55 Gallon Drum	100 gal (1000 lbs)	5000 lbs
Sludge (filter cake)	Filter Cake	25 lbs	100 lb (2)
Sodium Sulfate	Dry Bulk	500 lbs	100 lb (2)

(1) From CFR Title 40 Part 302.4
(2) Not listed in CFR Title 40 Part 302.4. According to CFR Title 40 Part 302.4, if not listed then Reportable Quantity = 100 lbs

The "reportable quantity" listed in Table 3-1 reflects that amount of material which, if spilled, triggers the notification requirement of 40 CFR Part 302.4.

Additional details on select materials and waste listed in Table 3-1 are provided below.

Lime, $Ca(OH)_2$: The water treatment plant uses approximately 2 ½ tons of lime every day of operation. DMC mixes its own lime slurry on-site, using solid lime hydrate, and water. The mixing occurs in a tank in the main building of the water treatment plant. At present, the lime hydrate is delivered to the facility from the Dawn millsite on an as needed basis in a tanker truck and is pneumatically transferred by trained personnel directly into the Lime Silo situated adjacent to the water treatment building (Figure 2-2). This method of pneumatic transference minimizes the potential for spills, including spills that could potentially come into contact with stormwater runoff. When needed for water treatment, the lime hydrate is transferred using an auger to the lime mixing tank inside the main building.

Flocculant: The water treatment plant uses approximately 36 pounds of polyacrylamide flocculant each day of operation. This material is delivered to the facility from the Dawn millsite by truck on an as-needed basis. Dawn currently uses Neo Solutions, Inc. NS 6852 as a flocculant. The material arrives in solid form in 50-pound bags which are unloaded inside the main building by hand where a solution is mixed and stored inside the treatment plant building. To the extent that storage is needed, the bags are stored on pallets inside the main building to prevent contact with stormwater and minimize the potential for uncontrolled spills.

Sulfuric acid: The water treatment plant uses approximately 1 gallon of sulfuric acid every day of operation. The concentrated sulfuric acid (approximately 93% by weight) is delivered to the facility

in liquid form in 55-gallon drums which are stored inside the main building to prevent contact with stormwater and minimize the potential for uncontrolled spills.

Diesel Fuel: The water treatment plant uses approximately 25 gallons of diesel fuel for equipment at the WTP every day of operation. The diesel fuel is delivered to the facility in liquid form in 55-gallon drums which are stored near Pit 4. The diesel fuel and pump are secondarily contained to minimize the potential for uncontrolled spills. The maximum amount stored on site is approximately 300 gallons.

Lube Oil and Grease: The water treatment plant uses approximately 6 liquid ounces of lube oil and grease for maintenance of the equipment at the WTP every day of operation. The maximum amount of lube oil on site is approximately 15 gallons and the maximum amount of grease on site is approximately 170 ounces. The lube oil and grease are delivered to the facility in quart and tube containers which are stored inside the main building to prevent contact with stormwater and minimize the potential for uncontrolled spills.

Gasoline: The water treatment plant uses approximately 2 gallons of gasoline for equipment at the WTP every day of operation. The gasoline is stored on site in a 300 gallon tank next to the WTP.

Propane: The water treatment plant usage of propane varies as the seasonal temperature fluctuates. The propane is stored in two-1000 gallon tanks and two-500 gallon tanks and delivered on an as needed basis.

Barium chloride: The water treatment plant uses approximately 27 pounds of barium chloride per day of operation. The barium chloride is delivered to the facility from the Dawn millsite on an as needed basis in crystalline form in 50-pound bags which are unloaded inside the treatment plant building where a solution is mixed and stored in the treatment plant building. To the extent that storage is needed, the bags are stored on pallets inside the main building to prevent contact with stormwater and minimize the potential for uncontrolled spills.

Anti-scalant: The water treatment plant uses approximately 4 gallons of anti-scalant per day of operation. Dawn currently uses Neo Solutions Inc, NS 1100, which is a polyacrylic acid in liquid form. The anti-scalant is delivered as needed in 55-gallon barrels. It is and will continue to be stored inside the treatment plant in barrels.

Sludge (Filter cake): The water treatment plant generates a sludge-like product called filter cake. Approximately 10 to 12 tons of filter cake are generated each day during water treatment plant operations.

Sodium Sulfate: The water treatment plant may keep sodium sulfate on site in case of a barium chloride spill. The sodium sulfate can be used to precipitate the barium chloride and aid in the pickup in case of a spill.

4.0 SPILL CONTAINMENT, PREVENTION, AND RESPONSE

4.1 Good Housekeeping

The water treatment plant is the only portion of the facility where active operations are conducted by DMC. It is current practice to maintain this facility in a clean, orderly manner. Basic cleanup procedures (daily inspection of loading and unloading areas and storage areas, prompt cleanup of spills or leaks) will continue to be followed. In addition, in keeping with current practice, DMC will not store large amounts of chemicals aside from hydrated lime in the area for extended periods of time.

4.2 Spill Prevention and Response

The area of the water treatment plant is the only portion of the mine site where DMC's activities could result in spills that could potentially contribute pollutants to waters of the United States. Procedures are in place to prevent spills to the environment. These procedures, which are described in more detail below, include direct pneumatic transference of lime from the tanker truck to the enclosed tank (Lime Silo) and subsequently to the lime mixing tank, handling chemicals only in indoor areas, and use of a floor sump and pump-back system to contain spills. In addition, all outside tanks that are a part of the water treatment system are surrounded by a plastic-lined berm that has the capacity to contain the volume of all of the outdoor tanks. Any liquid accidentally released from the water treatment plant due to a catastrophic failure of the tanks inside or outside the water treatment plant, is controlled and conveyed by drainage channels. These drainage channels divert runoff either directly into Pit No. 3, or to the Blood Pool pump-back system located south east of the WTP (see Figure 2-3). Water captured by the pump-back system is pumped into Pit No. 3. If the supply line to the process plant from the pit breaks or ruptures, the low level alarm in the plant will sound alerting the operator of the problem. The operator will immediately shut the power off to the feed pump and will not restart it until the problem has been rectified.

The treatment plant building is designed into three separate sections: the main building, the conveyor room, and the truck shed. The main building houses most of the treatment plant equipment (filters, agitators, clarifiers, tanks, etc.). Most of the on site chemicals used in the water treatment process are also stored in this building. The floor of the main building is sloped such that any liquid spills drain to a sump in the center of the floor (Figure 2-2). The floor sump is equipped with a dedicated pump that is capable of pumping approximately 60 gallons per minute back into the water treatment circuit. All dry chemicals stored in the main building are stacked on pallets to keep them off of the floor. Accidental spills of dry material will be containerized by trained professionals and reused in the water treatment process if possible.

The neutralization surge tank, the filter backwash surge tank, and the filter discharge tank are the most likely tanks in the plant building that could overflow due to a malfunction of some element of the process. If overflow was to occur, the high level tank volume alarm would sound to alert the operator to the problem. Any process water that was released would be captured in the plant sump. The operator would direct the flow from the sump to the proper tank as directed in Table 4-1 by manually changing the direction of flow at the valve.

Should tank overflow occur the operator is to:

1. Turn off the mine pit pumps that bring water into the plant process circuit and place the plant process on stand-by mode.
2. Determine if the sump pumping is at a rate sufficient to control the overflow volume. If it is not, the installed sump pump pumping will be augmented by placing an auxiliary sump pump in the sump.
3. Direct the sump pump and auxiliary sump pump flows to the proper tank as directed in Table 4-1 by manually changing the direction of flow at the valve.
4. Determine if the predetermined placement of water pumped from the sump is appropriate in terms of the volume required to store the overflow and, if not, direct the sump pumped water to another tank in the process or to Pit 3, depending on the process stage from which the overflow water is coming.
5. Determine the cause of the overflow. Correct the problem. Restart the process.

Table 4-1. Overflowing Tank Sump Pump Discharge Locations

Overflowing Tank	Sump Pump and Auxiliary Pump Discharge Location
Lime Slaker Agitator Tank	Lime Day Tank
Lime Day Tank	Lime Day Tank
Barium Chloride Container	Neutralization Tank #1
Neutralization Tank #1	Neutralization Tank #1 or Pit 3
Neutralization Tank #2	Neutralization Tank #1 or Pit 3
Neutralization Tank #3	Neutralization Surge Tank or Pit 3
Neutralization Surge Tank	Neutralization Surge Tank or Pit 3
Clarifier #1	Clarifier O/F Tank or Pit 3
Clarifier #2	Neutralization Surge Tank or Pit 3
Acid Container	Neutralization Tank #1
Downflow Sand Filters	Clarifier O/F Tank or Pit 3
Filter Discharge Tank	Clarifier O/F Tank or Pit 3
Filter Backwash Surge Tank	Neutralizaiton Tank #1 or Pit 3
Sludge Steady Head Tank	Neutralization Surge Tank
Unlisted Tanks or Unknown Source	Neutralization Tank #1 or Pit 3

The conveyor room is the area between the main building and the truck shed. As mentioned previously, the water treatment plant generates a sludge-like product called filter cake. This substance is loaded by conveyor belt into dump trucks for transportation off-site. In the conveyor room, filter cake is transported by conveyor belt from the main building to the truck shed. The floor of the conveyor room is designed in a similar manner as the floor of the main building; i.e., sloped so that liquid will drain to a sump that is equipped with a dedicated pump that pumps fluid back into the water treatment cycle.

The truck shed is where the filter cake is loaded onto trucks for disposal. The trucks, while being loaded, are parked on a cement floor in a covered area to minimize the potential for spills to the outside environment. The floor of this area is sloped and equipped with a floor sump to capture any spillage before it can exit the building. Filter cake that spills in the truck shed is hosed into the floor sump. Any collected material is pumped back into the water treatment circuit by a dedicated pump.

Outside, and immediately adjacent to the treatment plant, are several tanks used in the water treatment process (e.g., clarifiers) and for chemical storage. These tanks are surrounded by a plastic lined berm that is capable of containing the entire volume of all the tanks. In the event of

a catastrophic failure of the outdoor tanks, the plastic lined berm would contain the spilled material which would then be pumped back into the water treatment circuit.

All stormwater that falls on the plant site drains to one of three areas as listed below:

- to Pit No. 3 via a drainage channel that parallels the road to the WTP;
- to the Blood Pool via overland flow; or
- to the Blood Pool pump-back station via a haul road drainage channel (see Figure 2-3).

Water that is captured by the Blood Pool or by the Blood Poll pump-back station is pumped into Pit No. 3 for eventual treatment in the WTP.

4.3 Spill Response Actions

Spills larger than the reportable quantities listed in Table 3-1 will be reported to the National Response Center (Section 5.0).

The following PPE should be worn when cleaning up any spill:

- NIOSH approved respirators for dust and radionuclides
- Rubber gloves
- Face shields
- Hard hats/helmets
- Protective eyewear
- Waterproof suit

4.3.1 Hydrated Lime Spill

In the event of a spill of hydrated lime requiring more than one person to clean up, a response team will be activated and dispatched to the scene from the plant site. The hydrated lime may be a dry powder or in slurry form. The response team will have equipment to retrieve the product from the spill site.

The response team and operator will wear any necessary personal protective equipment (PPE) deemed appropriate by the emergency response supervisor in addition to those listed above at the beginning of section 4.3.

For a spill of dry hydrated lime powder, reclaim the hydrated lime into a closed container for normal use or disposal as deemed appropriate. Any remaining dry material will be scraped up with the contaminated soil or surrounding material and disposed of as a hazardous substance. The remaining material will be diluted with water, then an inert absorbent material (e.g. Peat Sorb) will be added to absorb the liquid which will then be picked up and containerized for product disposal. Flush area with water and collect rinsate for disposal.

In the event that the hydrated lime is exposed to solutions (water, rain, snow, process solution, etc.) creating a slurry or is already at a slurry consistency, the resulting flow will be dammed near the site of the contamination using soil. An inert absorbent material (e.g. Peat Sorb) will be added to the ponded flow to absorb the liquid, thereby creating a sludge-like product. The

sludge will be picked up and containerized for disposal. The “spill area” will be flushed with water, and the rinsate will be collected for disposal.

The specific response and action taken by the operator and emergency response team will be dictated by weather conditions and will follow the MSDS procedures. A brief summary of first aid responses and special response notes from the MSDS forms are provided in tables 2-1 and 2-2. See Attachment A for the complete MSDS forms.

4.3.2 Sulfuric Acid Spill Response Action

In the event of an accident involving sulfuric acid, the emergency response team will be activated and dispatched to the scene from the plant site.

The response team and operator will wear any necessary personal protective equipment (PPE) deemed appropriate by the emergency response supervisor in addition to those listed above at the beginning of section 4.3. Because of the high concentration of the sulfuric acid neoprene gloves and neoprene boots should also be worn when handling sulfuric acid.

To prevent the spill from spreading laterally, an earthen dike or some impermeable materials suitable for containing sulfuric acid will be constructed and will be of sufficient size to intercept the spill and impacted water. The spill and any impacted water will be pumped back to a liquid containment facility. If spills of a high concentration of sulfuric acid are believed to still be prevalent after the initial pumping the free liquid shall be collected using an inert absorbent material (e.g. Peat Sorb) and containerized. After as much of the spill and impacted water as is possible has been collected and removed from the scene the spill will be diluted or neutralized. The spill will be neutralized by mixing a weak solution using hydrated lime from the bulk storage facility located on site and carefully adding the solution to the spilled area being aware of any violent chemical reaction that may take place. Caution should be taken when neutralizing with hydrated lime as a chemical reaction will occur between the hydrated lime and sulfuric acid. Neutralization may take 1-2 hours to complete. The additional liquid should be pumped back to a separate liquid containment facility. An inert absorbent material (e.g. Peat Sorb) should be used to collect any remaining liquid. This process should be repeated until the sulfuric acid has been removed from the scene. If necessary, downstream water will be treated to neutralize acid.

The specific response and action taken by the operator and emergency response team will be dictated by weather conditions and will follow the MSDS procedures. A brief summary of first aid responses and special response notes from the MSDS forms are provided in Tables 2-1 and 2-2. See Attachment A for the complete MSDS forms.

4.3.3 Flocculant Spill Response Actions

In the event of an accident involving flocculent, the emergency response team will be activated and dispatched to the scene from the plant site.

The response team and operator will wear any necessary personal protective equipment (PPE) deemed appropriate by the emergency response supervisor in addition to those listed above at the beginning of Section 4.3.

For a dry spill of flocculant, reclaim the product by using a vacuum into a closed container for normal use or disposal as deemed appropriate. Any remaining dry material will be scraped up with the contaminated soils and disposed of as a hazardous substance. The remaining material

will be diluted with water. Caution should be taken as flocculant solution is extremely slippery and could constitute a fall hazard. Add an inert absorbent material (e.g. Peat Sorb) to absorb the liquid and then pick up and containerize for product disposal. Flush area with water and collect rinsate for disposal.

To prevent the flocculent spill in solution from spreading laterally an earthen dike or some impermeable materials (plastic liners, etc.) will be constructed and will be of sufficient size to intercept the spill and impacted water. Caution should be taken as flocculant solution is extremely slippery and could constitute a fall hazard. Add an inert absorbent material (e.g. Peat Sorb) to absorb the liquid and pick up and containerize for product disposal. Flush area with water and collect the rinsates for disposal.

The specific response and action taken by the operator and emergency response team will be dictated by weather conditions and will follow the MSDS procedures. A brief summary of first aid responses and special response notes from the MSDS forms are provided in Tables 2-1 and 2-2. See Attachment A for the complete MSDS forms.

4.3.4 Barium Chloride Spill Response Action

In the event of an accident involving barium chloride, the emergency response team will be activated and dispatched to the scene from the plant site.

The response team and operator will wear any necessary personal protective equipment (PPE) deemed appropriate by the emergency response supervisor in addition to those listed above at the beginning of section 4.3. A NIOSH approved respirator is highly recommended when handling Barium Chloride.

For a dry spill of barium chloride, reclaim the product into a closed container for normal use or disposal as a hazardous substance. Dilute the remaining material with water and sodium sulfate, then add an inert absorbent material (e.g. Peat Sorb) to adsorb the remaining liquid and pick up and containerize for product disposal. Flush area with water and collect rinsates for disposal.

To prevent the spill in solution from spreading laterally, an earthen dike or some impermeable materials (plastic liners, etc.) will be constructed and will be of sufficient size to intercept the spill and impacted water. The bulk of the collected solution should be pumped back to a liquid containment facility. Dilute the remainder with water, then add an inert absorbent material (e.g. Peat Sorb) to the remaining liquid and pick up and containerize for product recovery or disposal. Flush area with water and collect the rinsates for disposal.

The specific response and action taken by the operator and emergency response team will be dictated by weather conditions and will follow the MSDS procedures. A brief summary of first aid responses and special response notes from the MSDS forms are provided in tables 2-1 and 2-2. See Attachment A for the complete MSDS forms.

4.3.5 Anti-Scalant Spill Response Action

In the event of an accident involving anti-scalant, the emergency response team will be activated and dispatched to the scene from the plant site.

The response team and operator will wear any necessary personal protective equipment (PPE) deemed appropriate by the emergency response supervisor in addition to those listed above at the beginning of Section 4.3.

For anti-scalant spills do not flush with water, instead construct an earthen dike or use some impermeable material (plastic liners, etc.) to contain the spill area and soak up with an inert absorbent material (e.g. Peat Sorb). Caution should be taken as anti-scalant solution is extremely slippery and could constitute a fall hazard.

The specific response and action taken by the operator and emergency response team will be dictated by weather conditions and will follow the MSDS procedures. A brief summary of first aid responses and special response notes from the MSDS forms are provided in Tables 2-1 and 2-2. See Attachment A for the complete MSDS forms.

4.3.6 Process Solution Spill Response Action

For purposes of this Contingency Plan, process solutions are defined as any solution from the water treatment process that has not completed the entire treatment process.

4.3.6.1 Response Action Inside Water Treatment Building

In the event of an accident involving process solution, the emergency response team will be activated and dispatched to the scene.

The response team and operator will wear any necessary personal protective equipment (PPE) deemed appropriate by the emergency response supervisor in addition to those listed above at the beginning of Section 4.3.

For process solution spills contained in the water treatment process area, the solution will be collected in the various floor sumps located throughout the treatment plant. The process solution will be pumped back into the treatment process line in the appropriate tank depending on the nature of the spill.

After the spilled process solution has been evacuated from the floor, the area affected by the spill is to be flushed with water as deemed appropriate and the rinsates collected and pumped to the appropriate tank in the treatment process line or to the neutralization tank #1 depending on the nature of the spill and summarized in Table 4-1.

4.3.6.2 Response Actions Outside Water Treatment Building

In the event of an accident involving process solution outside the WTP building, the emergency response team will be activated and dispatched to the scene from the plant site.

The response team and operator will wear any necessary personal protective equipment (PPE) deemed appropriate by the emergency response supervisor in addition to those listed above at the beginning of Section 4.3.

To prevent the spill from spreading laterally outside the clarifier berm area, an earthen dike or some impermeable materials (plastic liners, etc.) will be constructed and will be of sufficient size to intercept the spill and impacted water. Collected water will be pumped back to the beginning of the water treatment process line.

If the outside spill involves acid, then downstream water will be treated to neutralize acid downstream of the collection dam should it be necessary. The spill will be neutralized utilizing hydrated lime from the bulk storage facility located on the site or acid depending on the pH of the spill. All affected soils once neutralized, will be transported to the mill for treatment or to the tailings impoundment for disposal as deemed appropriate. The solutions will be transferred to the water treatment plant for processing.

Specific responses and actions of the team will follow the MSDS procedures for acids since the process solutions depend on the pH and nature of the solution. The specific response and action taken by the operator and emergency response team will be dictated by weather conditions and will follow the MSDS procedures. A brief summary of first aid responses and special response notes from the MSDS forms are provided in Tables 2-1 and 2-2. See Attachment A for the complete MSDS forms of the individual chemicals on site.

4.3.7 Fuels Spills Response Actions

Fuels, including diesel, gasoline, propane, and lubrications oils (considered as a fuel in this discussion) must be handled carefully to avoid spills. Personal protective equipment (PPE) deemed appropriate by the emergency response supervisor in addition to those listed above at the beginning of section 4.3 should be worn at all times when handling a fuel spill. If a spill should occur, the following steps should be implemented at once.

If possible, all ignition sources in and adjacent to the spill site should be removed immediately. Keep upwind of leak while attempting to contain spill. If highly concentrated, evacuate area until the gas has dispersed. Fuel spills must then be contained as soon as possible after the loss has occurred to prevent spreading and to simplify cleanup procedures.

4.3.7.1 Land Spills

To prevent the spill from spreading laterally, construct an earthen dike or dam of sufficient size to intercept both the fuel and impacted water.

4.3.7.2 Water Spills

Contain the floating fuel with a boom, which is any device that will float on the water, thus preventing the spread of fuel. The boom contained in the kit may be used or constructed of logs or any readily available flotation device. Ideally, the boom will extend a few feet into the water. It is noted that there are no streams or unconfined surface water sources of significant proportions on the site.

Deploy the boom across the channel, downstream from the spill; the higher the current, the more the acute angle needed between the boom and the shore. Spread an inert adsorbent material (e.g. Peat Sorb) on the upstream side of the boom to prevent fuel from passing through joints or gaps. Fuel coming from upstream should strike the boom and be diverted to the shore where it can be recovered by Emergency Response personnel.

4.3.8 Sludge Spill Inside the Plant

If sludge (filter cake) should be spilled inside the plant:

1. To the maximum extent practical the sludge will be shoveled up and placed back in the process at the Neutralization Surge Tank.
2. After the solids have been recovered to the maximum extent practical, the floor in the area of the spill will be washed down to the sump where the sludge and wash water will be pumped to the Neutralization Tank #1.

All other sludge spills will be addressed after the Residuals Management Plan is finalized. The SPCC will be updated at that time and the appropriate procedures will be referenced.

4.4 Cleanup

After containment and neutralization, the impacted material should be eliminated for containment and neutralization continued until contamination is reduced to acceptable levels. Cleanup may involve removal and disposal of contaminated material. All cleanup activities should be carefully planned and recorded to establish a clear record of what actions were taken and where and when the actions occurred.

4.5 Monitoring

Immediately following a spill event, potentially affected surface waters and water supplies will be sampled and tested for residual chemicals. Samples will be collected and sent to a commercial laboratory for analysis. Frequent monitoring of all potentially affected sites should be continued until it has been determined the spill has been contained, neutralized, and no further contamination exists.

5.0 GENERAL EMERGENCY PROCEDURES

The emergency personnel, procedures, and contacts for a spill incident were discussed in Section 4 of the Contingency Plan. Emergency contacts are listed below for ease of reference.

General Emergency Numbers:

Spokane Tribal Police Department and Ambulance	509-258-4400
Local Law Enforcement (Stevens County Sheriff Dispatch)	509-684-2555

Hospital: Sacred Heart Medical Center: 509-455-3131

Washington Poison Control Center: 800-222-1222

Corporate Resources:

Site Manager

	(office)	509-258-4511
Bob Nelson	(cell)	509-936-0688
	(home)	509-935-6719
	(pager)	509-889-6687

WTP Site Supervisor

	(office)	509-258-4511
Don Plummer	(pager)	509-889-6688
	(home)	509-796-4021

Site Operations Manager

	(office)	509-258-4511
Bobby Nelson	(Home)	509-935-7205
	(pager)	509-889-6686

EPA
EPA Regional Project Manager
Ellen Hale
EPA, Region 10 (ECL-113)
1200 Sixth Avenue, Suite 900
Seattle, Washington 98101
206-553-1215

EPA Emergency Response Unit, Region 10
206-553-1263

National Response Center (for spills greater than reportable quantity)
800-424-8802

Other Resources:

RCRA, Superfund & EPCRA Hotline	800-424-9346
U.S. EPA Environmental Response Team	732-321-6660
Spokane Tribe of Indians	

Regular Mail
Spokane Tribe of Indians
Natural Resources Department
Attn: Randy Connolly, Superfund Coordinator
PO Box 480
Wellpinit, Washington 99040

or

Express Mail
Spokane Tribe of Indians
Natural Resources Department
Attn: Randy Connolly, Superfund Coordinator
6290-B Ford-Wellpinit Road
Wellpinit, Washington 99040

6.0 EMPLOYEE TRAINING

Because of the limited nature of the operations being carried out by DMC at the mine and the limited number of people who may be involved in implementing this SPCC plan, a formal program of employee training is not needed to implement the plan. With respect to any persons other than the Site Manager who may be involved in plan implementation, such persons will be informed of the components and goals of the plan as it relates to their functions prior to beginning work on the plan. The Site Manager will update WTP employees on any changes in the SPCC plan.

7.0 PREVENTATIVE MAINTENANCE AND INSPECTIONS

The plastic-lined berms and the drainage channels are and will continue to be visually inspected on an annual basis and any repairs or maintenance will be carried out. The floor sumps and pumping systems associated with the plant will be checked on a routine basis during operation periods. All areas where chemicals are stored will be inspected weekly to ensure that there are no leaking containers or other conditions that could result in spills. Records of spills or any potential problems detailed during inspections, as well as any follow-up measures, will be kept at DMC's offices in Ford, Washington.

8.0 SECURITY

The Midnite Mine WTP has an existing barbed wire fence surrounding the facility. There are two gates, one to the pump station and one to the access road to the pit area and to Wellpinit. Access to the water treatment plant is limited by the barbed wire fence, one road to the site, and the remoteness of the site. Gates are kept locked except when plant personnel or delivery persons are entering or leaving the facility. No unauthorized persons are allowed access to the WTP area.

In accordance with the ROD Section 12.2.5, the existing barbed wire fence will be replaced with a chain-linked fence and new gates. Warning signs will be posted along the fence and at gates. Access to the WTP will be restricted. The new fencing and signage will be outlined in a Fencing/Signage Plan to be submitted at a later date.

A plant operator is present on site while treatment operations are in progress. When operations are not in progress, the doors to the facility are kept locked to prevent accidental entry. At night, the site is kept well lit.

REFERENCES

Shepherd Miller, Inc. (SMI), 1996. *Best Management Practices Plan for the Midnite Mine Water Treatment Plant, Wellpinit, Washington.* Prepared for Dawn Mining Company. April 29.

U.S. Environmental Protection Agency (EPA), 1995. *Midnite Mine NPDES Permit WA 002572-1.* October.

ATTACHMENT A
MSDS SHEETS

GRAYMONT

MATERIAL SAFETY DATA SHEET

SECTION I - CHEMICAL PRODUCT AND COMPANY INFORMATION

Product Name: **HIGH CALCIUM HYDRATED LIME**	**WHMIS – CLASSIFICATION: D2A / D2B: MATERIALS CAUSING OTHER TOXIC EFFECTS E: CORROSIVE MATERIAL**

MANUFACTURER'S AND SUPPLIER'S NAME:

GRAYMONT (NB) INC	4634, Route 880, Havelock, New Brunswick, E4Z 5K8.
GRAYMONT (QC) INC.	25, rue De Lauzon, Boucherville (Québec), J4B 1E7.
GRAYMONT (PA) INC.	965, East College avenue, Pleasant Gap, PA 16823
GRAYMONT (WESTERN CANADA) INC.	190 – 3025, 12 Street N.E., Calgary, Alberta, T2E 7J2
GRAYMONT (WESTERN US) INC.	3950 South, 700 East, Suite 301, Salt Lake City, Utah 84107

EMERGENCY TEL. No.: (613) 996 – 6666 CANUTEC (Canada) (800) 424 – 9300 CHEMTREC (US)

Chemical Name	Chemical Family	Chemical Formula
Calcium hydroxide	**Alkaline earth hydroxide**	**Complex mixture - mostly $Ca(OH)_2$**
Molecular Weight	Trade Name and Synonyms	Material Use
$Ca(OH)_2$ = 74.096	**Hydrated Lime, Lime, Slaked lime, Lime Putty, Lime Slurry, Milk of Lime, Calcium Hydroxide**	**Neutralization, Flocculation, Stabilization, absorption**

SECTION II - COMPOSITION AND INFORMATION ON INGREDIENTS

Hazardous Ingredients	Approximate Concentration (% by weight)	C.A.S. Number	Exposure limits (mg/m^3)					
			OSHA PEL	ACGIH TLV	RSST VEMP	MSHA PEL (Note 2)	NIOSH REL	NIOSH IDLH
(Complex Mixture)	(% by weight)		(TWA) 8/40h	(TWA) 8/40h	(TWA) 8/40h	(TWA) 8/40h	(TWA) 10/40h	
Calcium hydroxide	**92 to 100**	**1305-62-0**	**15 (tot dust) 5 resp dust**	**5**	**5**	**5**	**5**	**N/A**
Crystalline Silica, Quartz	**0.1 to 1**	**14808-60-7**	**$10/(\%SiO_2)+2$ respirable silica dust**	**0.025 respirable silica dust**	**0.1 respirable silica dust**	**$10/(\%SiO_2)+2$ respirable silica dust**	**0.05 respirable free silica**	**50**
Crystalline Silica, Quartz	**0 to 0.1 (Note 1)**	**14808-60-7**	**$10/(\%SiO2)+2$ respirable silica dust**	**0.025 respirable silica dust**	**0.1 respirable silica dust**	**$10/(\%SiO2)+2$ (respirable silica dust)**	**0.05 respirable free silica**	**50**

(Note 1): Concentration of crystalline silica in a series of lime products will vary from source to source. It was not detected on some samples (< 0.1% w/w). Therefore two ranges are being disclosed. **(Note 2)**: ACGIH TLV Version 1973 has been adopted by the Mine Safety Health Administration (MSHA) as the regulatory Exposure Standard.

SECTION III - PHYSICAL AND CHEMICAL DATA

Physical State	Odor and Appearance		Odor Threshold (p.p.m.)	Specific Gravity
Gas ☐ Liquid ☐ Solid ☑	**Slight earthy odor – Fine white powder**		**Not applicable**	**2.3 – 2.4**
Vapor Pressure (mm)	Vapor Density (Air = 1)	Evaporation Rate	Boiling Point (°C)	Melting Point (°C)
Not applicable	**Not applicable**	**Not applicable**	**Not applicable**	**Not applicable**
Solubility in Water (20°C)	Volatiles (% by volume)	pH (25 °C)	Bulk Density (kg/m^3)	Coefficient of water/oil distribution
0.165g/100g Sat.soln	**Not applicable**	**Sat. soln $Ca(OH)_2$ 12.45**	**320 - 690**	**Not applicable**

SECTION IV - FIRE OR EXPLOSION HAZARD DATA

Flammability

Yes ☐ No ☑ If yes, under which conditions?

Extinguishing Media

Calcium Hydroxide does not burn. Use extinguishing media appropriate to surrounding fire conditions.

Special Fire Fighting Procedures

Not applicable

Flash point (°C) and Method	Upper flammable limit (% by volume)	Lower flammable limit (% by volume)
Not applicable	**Not applicable**	**Not applicable**
Auto Ignition Temperature (°C)	TDG Flammability Classification	Hazardous Combustion Products
Not applicable	**Non-flammable**	**None**

Dangerous Combustion Products **None**

EXPLOSION DATA

Sensitivity to Chemical Impact	Rate of Burning	Explosive Power	Sensitivity to Static Discharge
Not applicable	**Not applicable**	**Not applicable**	**Not applicable**

SECTION V - REACTIVITY DATA

Chemical Stability		
Yes ☐ No ☑	If no, under which conditions?	**Absorbs carbon dioxide in the air to form calcium carbonate.**
Incompatibility to other substances		
Yes ☑ No ☐	If so, which ones?	**Boron tri-fluoride, chlorine tri-fluoride, ethanol, fluorine, hydrogen fluoride, phosphorus pentoxide; and acids (violent reaction with generating heat and possible explosion in confined area).**
Reactivity		
Yes ☑ No ☐	If so, under which conditions?	**Reacts violently with strong acids. Reacts chemically with acids and many other compounds and chemical elements to form calcium based compounds. Explosive when mixed with nitro organic compounds.**
Hazardous Decomposition Products		**Thermal decomposition at 540°C will produce calcium oxide and water.**
Hazardous Polymerization Products		**Will not occur.**

SECTION VI - TOXICOLOGICAL PROPERTIES

Route of Entry

☑ Skin Contact ☐ Skin Absorption ☑ Eye Contact ☑ Acute Inhalation ☐ Chronic Inhalation ☑ Ingestion

Effects of Acute Exposure to Product

Skin	**Severe irritation of mucous and skin, removes natural skin oils.**
Eyes	**Severe eye irritation, intense watering of the eyes, possible lesions, possible blindness when exposed for prolonged period. Eye-Rabbit-10mg/ 24 h – Severe.**
Inhalation	**If inhaled in form of dust, irritation of breathing passages, cough, sneezing.**
Ingestion	**If ingested: pain, vomiting blood, diarrhea, collapse, drop in blood pressure (indicates perforation of esophagus or stomach).**

Effects of Chronic Exposure to Product:

Contact dermatitis. Following repeated or prolonged contact, this product can cause redness, desquamation and fissures. This product may contain trace amounts of crystalline silica. Excessive inhalation of respirable crystalline silica dust may result in respiratory disease, including silicosis, pneumoconiosis and pulmonary fibrosis.

LD_{50} of Product (Specify Species and Route)	Irritancy of Product	Exposure limits of Product
(Food grade $Ca(OH)_2$: 7340mg/kg) (Rats, ingestion)	**Severe to moist tissues**	**Unavailable**
LC_{50} of Product (Specify Species)	Sensitization to Product	Synergistic materials
Unavailable	**None**	**None reported**

SECTION VI - TOXICOLOGICAL PROPERTIES (Cont'd)

☑ *Carcinogenicity* ☐ *Reproductive effects* ☐ *Tératogenicity* ☐ *Mutagenicity*

Calcium Hydroxide is not listed as a carcinogen by ACGIH, MSHA, OSHA, NTP or IARC. It may, however, contain trace amounts of Crystalline Silica listed carcinogens by these organizations.

Crystalline Silica, which inhaled in the form of quartz or crystobalite from occupational sources, is classified by IARC as (Group 1) carcinogenic to humans.

Silica, crystalline (Airborne particles of respirable size) is regulated under California's Safe Drinking Water and Toxic Enforcement Act of 1986. (Proposition 65).

NIOSH considers crystalline silica to be potential occupational carcinogen as defined by the OSHA carcinogen policy [29 CFR 1990].

NTP lists respirable Crystalline Silica as known to be human carcinogens based on sufficient evidence of carcinogenicity in humans.

ACGIH lists respirable Crystalline Silica (quartz) as suspected human carcinogen (A-2).

RSST lists respirable Crystalline Silica (quartz) as suspected human carcinogen.

SECTION VII - PREVENTIVE MEASURES

Personal Protective Equipment (PPE)	**Wear clean, dry gloves, full length pants over boots, long sleeved shirt buttoned at the neck, head protection and approved eye protection selected for the working conditions.**

Gloves (Specify)	Respiratory (Specify)	Eyes (Specify)	Footwear (Specify)
Gauntlets Cuff style	**NIOSH approved (N/R/P95) dust respirator**	**ANSI, CSA or ASTM approved safety glasses with side shields. Tight fitting dust goggles should be worn when excessive (visible) dust conditions are present. Do not wear contact lenses without tight fitting goggles when handling this chemical.**	**Resistant to caustics**

Clothing (Specify)	Other (Specify)
Fully covering skin	**Evaluate degree of exposure and use PPE if necessary. After handling lime, employees must shower. If exposed daily, use oil, Vaseline, silicone base creme etc. to protect exposed skin, particularly neck, face and wrists.**

Engineering Controls (e.g. ventilation, enclosed process, specify)

Enclose dust sources; use exhaust ventilation (dust collector) at handling points, keep levels below Max. Concentration Permitted.

SECTION VII - PREVENTIVE MEASURES (Cont'd)

Leak and Spill Procedure

Limit access to trained personnel. Use industrial vacuums for large spills. Ventilate area.

Waste Disposal

Transport to disposal area or bury. Review Federal, Provincial and local Environmental regulations.

Handling Procedures and Equipment

Avoid skin and eye contact. Minimize dust generation. Wear protective goggles and in cases of insufficient ventilation, use anti-dust mask. An eye wash station and safety shower should be readily available where this material or its water dispersions are used. Contact lenses should not be worn when working with this chemical.

Storage Requirements

Keep tightly closed containers in a cool, dry and well-ventilated area, away from acids. Keep out of reach of children.

Special Shipment Information

Calcium Hydroxide is neither regulated by the Transportation of Dangerous Goods (TDG) Regulations (Canada) nor by the Hazardous Materials Regulations (USA).

SECTION VIII - FIRST AID MEASURES

Skin

Carefully and gently brush the contaminated body surfaces in order to remove all traces of lime. Use a brush, cloth or gloves. Remove all lime-contaminated clothing. Rinse contaminated area with lukewarm water for 15 to 20 minutes. Consult a physician if exposed area is large or if irritation persists.

Eyes

Immediately rinse contaminated eye(s) with gently running lukewarm water (saline solution is preferred) for 15 to 20 minutes. In the case of an embedded particle in the eye, or chemical burn, as assessed by first aid trained personnel, contact a physician.

Inhalation

Move source of dust or move victim to fresh air. Obtain medical attention immediately. If victim does not breathe, give artificial respiration.

Ingestion

If victim is conscious, give 300 ml (10 oz) of water, followed by diluted vinegar (1 part vinegar, 2 parts water) or fruit juice to neutralize the alkali. Do not induce vomiting. Contact a physician immediately.

General Advise

Consult a physician for all exposures except minor instances of inhalation.

SECTION IX - REGULATORY INFORMATION

Superfund Amendments and Reauthorization Act of 1986 (SARA Title III). / The Emergency Planning and "Community Right-to-Know" Act (EPCRA). / Comprehensive Environmental Response, Compensation and Liability Act (CERCLA). / Resource Conservation and Recovery Act (**RCRA**).

Component Calcium Hydroxide has been reviewed against the following regulatory listings:

- **SARA Section 302 – Emergency Planning Notification. Extremely Hazardous Substances (EHS) List and Threshold Planning Quantity (TPQ). (40 CFR, Part 355, Section 30) : Not listed.**
- **SARA Section 304 – Emergency Release Notification. Extremely Hazardous Substances (EHS) and Reportable Quantity (RQ) List. (40 CFR, Part 355, Section 40) : Not listed.**
- **SARA Section 311/312 – Hazard Categories (40 CFR, Part 370) : This product is regulated under CFR 1910.1200 (OSHA Hazard Communication) as Immediate (Acute) Health Hazards – Irritant.**
- **SARA Section 313 – Toxics Release Inventory (TRI). Toxic Chemical List (40 CFR, Part 372). Not listed.**
- **CERCLA – Hazardous Substance (40 CFR, Part 302): Not listed in Table 302.4.**
- **RCRA – Hazardous Waste Number (40 CFR, Part 261, Subpart D): Not listed.**
- **RCRA – Hazardous Waste Classification (40 CFR, Part 261, Subpart C): Not classified.**

CWA 311. - Clean Water Act List of Hazardous Substances.

Calcium Hydroxide has been withdrawn from the Clean Water Act (CWA) list of hazardous substances. (11/13/79) (44FR65400)

California Proposition 65.

Component Calcium Hydroxide does not appear on the above regulatory listing. This product may contain small amounts of crystalline silica. Silica, crystalline (Airborne particles of respirable size) is regulated under California's Safe Drinking Water and Toxic Enforcement Act of 1986. (Proposition 65)

Transportation - Hazardous Materials Regulations (USA) & Transportation of Dangerous Goods (TDG) Regulations (Can).

Calcium Hydroxide does not appear on the above regulatory listings

Toxic Substances Control Act (TSCA).

All naturally occurring components of this product are automatically included in the USEPA TSCA Inventory List per 40 CFR 710.4 (b). All other components are one the USEPA TSCA Inventory List. Calcium Hydroxide is exempt from reporting under the inventory update rule.

Canadian Environmental Protection Act (CEPA) – Substances Lists (DSL/NDSL).

Calcium Hydroxide appears on the Domestic Substances List (DSL).

ANSI/NSF 60 - Drinking Water Treatment Additives.

Hydrated Lime has been investigated with respect to elements identified by EPA as toxic and it has been classified for use in direct contact with drinking water. (in accordance with Standard ANSI/NSF 60). For a list of classified products, refer to Underwriters Laboratories Inc.'s Online Certifications Directory.

FDA - U.S. Food and Drug Administration, Department of Health and Human Services.

Calcium Hydroxide has been determined as "Generally Recognized As Safe" (GRAS) by FDA. See 21CFR184.1205. (CFR Title 21 Part 184 - - Direct food substances affirmed as generally recognized as safe).

SECTION X - OTHER INFORMATION

Hazardous Materials Identification System (U.S.)	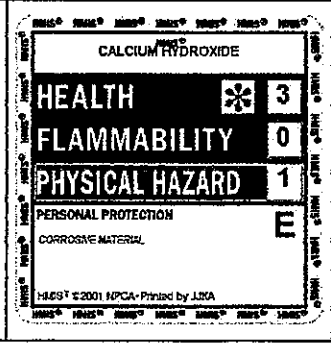	National Fire Protection Association (U.S.) 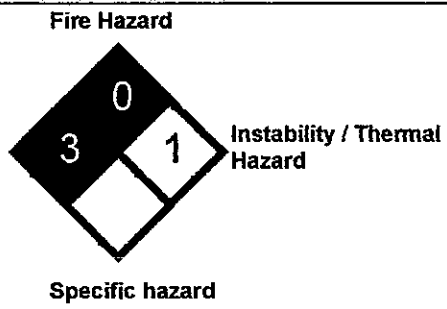

WHMIS – Classification: **"E" Corrosive Materials.**	WHMIS – Classification: **"D2A" and "D2B" Materials causing other toxic effects.**
Symbol:	Symbol: 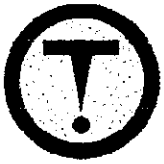

Additional Information/Comments:

The technical data contained herein is given as information only and is believed to be reliable. GRAYMONT makes no guarantee of results and assumes no obligation or liability in connection therewith.

Sources Used:

NFPA, NLA, TDG, CSST, RSST, (LSRO-FASEB), Hazardous Products Act, Environment Canada, Enviroguide, OSHA, ACGIH, IARC, NIOSH, CFR, NTP, HSDB, EPA SRS, Chemistry and Technology of Lime and Limestone (John Wiley and Sons, Inc.), Lime and Limestone (WILEY-VCH).

SECTION XI - PREPARATION INFORMATION

Prepared by:	Telephone number:	Date :
GRAYMONT (QC) INC. **Technical Services**	**(450) 449-2262**	**September 2006**

An electronic version of this MSDS is available at: www.graymont.com under the PRODUCTS section.

MATERIAL SAFETY DATA SHEET

Rev. Date : 7/30/02

1. IDENTIFICATION OF THE PRODUCT AND THE COMPANY

Product Name : **NS 6852**

Company : Neo Solutions, Inc.
P.O. Box 26
Beaver, PA 15009

Emergency Telephone Number : (724) 728-1847 Fax : (724) 728-3440

Product Use : Process aid for industrial applications.

2. COMPOSITION / INFORMATION ON INGREDIENTS

Identification of the preparation : Anionic water-soluble polymer.

3. HAZARDS IDENTIFICATION

Aqueous solutions or powders that become wet render surfaces extremely slippery.

4. FIRST AID MEASURES

Inhalation : Move to fresh air.

Skin contact : Wash with water and soap as a precaution. In case of persistent skin irritation, consult a physician.

Eye contact : Rinse thoroughly with plenty of water, also under the eyelids. In case of persistent eye irritation, consult a physician.

Ingestion : The product is not considered toxic based on studies on laboratory animals.

5. FIRE-FIGHTING MEASURES

Suitable extinguishing media : Water, water spray, foam, carbon dioxide (CO_2), dry powder.

Special fire-fighting precautions : Aqueous solutions or powders that become wet render surfaces extremely slippery.

Special protective equipment for firefighters : No special protective equipment required.

6. ACCIDENTAL RELEASE MEASURES

Personal precautions :	No special precautions required.
Environmental precautions :	Do not contaminate water.
Methods for cleaning up :	Do not flush with water. Clean up promptly by scoop or vacuum. Keep in suitable and closed containers for disposal. After cleaning, flush away traces with water.

7. HANDLING AND STORAGE

Handling :	Avoid contact with skin and eyes. Avoid dust formation. Do not breathe dust. Wash hands before breaks and at the end of workday.
Storage :	Keep in a dry, cool place (0 - 35 °C).

8. EXPOSURE CONTROLS / PERSONAL PROTECTION

Engineering measures to reduce exposure :	Use local exhaust if dusting occurs. Natural ventilation is adequate in absence of dusts.
Personal protection equipment :	
- Respiratory protection :	Dust safety masks are recommended where concentration of total dust is more than 10 mg / m^3.
- Hand protection :	Rubber gloves.
- Eye protection :	Safety glasses with side-shields. Do not wear contact lenses.
- Skin and body protection :	Chemical resistant apron or protective suit if splashing or repeated contact with solution is likely.
Hygiene measures :	Wash hands before breaks and at the end of workday. Handle in accordance with good industrial hygiene and safety practice.

9. PHYSICAL AND CHEMICAL PROPERTIES

Form :	granular solid
Color :	white
Odor :	none
pH :	4 - 9 @ 5 g/L (for product series. See Technical Bulletin for specific value)
Melting point (°C) :	Not applicable.
Flash point (°C) :	Not applicable.
Autoignition temperature (°C) :	Not applicable.
Vapor pressure (mm Hg) :	Not applicable.
Bulk density :	See Technical Bulletin.
Water solubility :	See Technical Bulletin.
Viscosity (mPa's) :	See Technical Bulletin.

10. STABILITY AND REACTIVITY

Stability :	Product is stable, no hazardous polymerization will occur.
Materials to avoid :	Oxidizing agents may cause exothermic reactions.
Hazardous decomposition products :	Thermal decomposition may produce : nitrogen oxides (NOx), carbon oxides.

11. TOXICOLOGICAL INFORMATION

Acute toxicity :

- Oral :	LD50 / oral / rat > 5000 mg/kg
- Dermal :	The results of testing on rabbits showed this material to be non-toxic even at high dose levels.
- Inhalation :	The product is not expected to be toxic by inhalation.

Irritation :

- Skin :	The results of testing on rabbits showed this material to be non-irritating to the skin.
- Eyes :	Testing conducted according to the Draize technique showed the material produces no corneal or iridial effects and only slight transitory conjuctival effects similar to those which all granular materials have on conjuctivae.
Sensitization :	The results of testing on guinea pigs showed this material to be non-sensitizing.
Chronic toxicity :	A two-year feeding study on rats did not reveal adverse health effects. A one-year feeding study on dogs did not reveal adverse health effects.

12. ECOLOGICAL INFORMATION

Acute aquatic toxicity :

- Fish :	LC50 / Danio rerio / 96 hours > 100 mg/L (OECD 203)
- Daphnids :	EC50 / Daphnia magna / 48 hours > 100 mg/L (OECD 202)
- Algae :	IC50 / Scenedesmus subspicatus / 72 hours > 100 mg/L (OECD 201)
- Hydrolysis :	Does not hydrolyze.
- Biodegradation :	Not readily biodegradable.
- $LogP_{ow}$:	0
- Bioaccumulation :	Does not bioaccumulate.

13. DISPOSAL CONSIDERATIONS

Waste from residues / unused products : In accordance with local and national regulations.

Contaminated packaging : Rinse empty containers with water and use the rinse water to prepare the working solution. Can be landfilled or incinerated, when in compliance with local regulations.

14. TRANSPORT INFORMATION

Remarks : Not classified as dangerous in the meaning of transport regulations.

15. REGULATORY INFORMATION

This product is not a hazardous article and need not be labeled according to EC-Directives as amended.

Inventory status :

EINECS (Europe) : Existing polymer according to the definition in the 7th Amendment to Directive 67 / 548 / EEC. All starting materials and additives are listed in EINECS.

TSCA (USA) : Complies with all applicable rules or orders under TSCA.

DSL (Canada) : All components listed on inventory.

AICS (Australia) : All components listed on inventory.

MITI (Japan) : All components listed on inventory.

ECL (Korea) : All components listed on inventory.

NEPA (China) : All components listed on inventory.

PICCS (Philippines) : All components listed on inventory.

16. OTHER INFORMATION

Further information :

This MSDS was prepared in accordance with the following :

Council Directive 92 / 32 / EEC of 30 April 1992 amending for the seventh time Directive 67 / 548 / EEC on the approximation of the laws, regulations, and administrative provisions relating to the classification, packaging, and labeling of dangerous substances and all subsequent adaptations to technical progress.

[illegible] EC of the European Parliament and its [illegible] approximation of the [illegible]s, regulations, and administrative provisions of the Member States relating to the classification, packaging, and labeling of dangerous preparations.

Commission Directive 2001 / 58 / EC of 27 July 2001 amending for the second time Directive 91 / 155 / EEC defining and laying down the detailed arrangements for the system of specific information relating to dangerous preparations in implementation of Article 14 of European Parliament and Council Directive 1999 / 45 / EC and relating to dangerous substances in implementation of Article 27 of Council Directive 67 / 548 / EEC (safety data sheets).

ISO 11014-1 : Material Safety Data Sheet for Chemical Products.

Person to contact : Product Manager

The information provided in this Safety Data Sheet is correct to the best of our knowledge, information, and belief at the date of its publication. The information given is designed only as a guidance for safe handling, use, processing, storage, transportation, disposal, and release, and is not to be considered a warranty or quality specification. The information relates only to the specific material designated and may not be valid for such material used in combination with any other materials or in any process unless specified in the text.

teckcominco

SULFURIC ACID
MATERIAL SAFETY DATA SHEET

SECTION 1. PRODUCT AND COMPANY IDENTIFICATION

Product Identity: Sulfuric Acid (93 percent)

Manufacturer:
Teck Cominco Metals Ltd.
Trail Operations
Trail, British Columbia
V1R 4L8
Emergency Telephone: 250-364-4214

Supplier:
Teck Cominco American Incorporated
Industrial Chemicals
15918 East Euclid Avenue
P.O. Box 3087
Spokane, WA 99216-1815

MSDS Preparer:
Teck Cominco Limited
600 - 200 Burrard Street
Vancouver, British Columbia
V6C 3L9

Date of Last Review/Edit: September 21, 2001.

Product Use: Used in the manufacturing of chlorine dioxide (a pulp and paper bleaching chemical), in the manufacturing of phosphate and sulphate fertilizers, in the manufacturing of metal sulfates, as a metal pickling chemical and as a component of lead storage batteries.

SECTION 2. COMPOSITION / INFORMATION ON INGREDIENTS

Hazardous Ingredient	Approximate Percent by Weight	C.A.S. Number	Occupational Exposure Limits (OELs)		LD_{50} / LC_{50} Species and Route	
Sulfuric Acid	93	7664-93-9	OSHA PEL	1 mg/m^3	LD_{50} ori-rat	2140 mg/kg
			ACGIH TLV	1 mg/m^3	LC_{50} ihl-rat	510 mg/m^3/2H
			NIOSH REL	1 mg/m^3	LC_{50} ihl-mouse	320 mg/m^3/2H

NOTE: OELs for individual jurisdictions may differ from OSHA PELs. Check with local authorities for the applicable OELs in your jurisdiction. OSHA - Occupational Safety and Health Administration; ACGIH - American Conference of Governmental Industrial Hygienists; NIOSH - National Institute for Occupational Safety and Health. OEL – Occupational Exposure Limit, PEL – Permissible Exposure Limit, TLV – Threshold Limit Value, REL – Recommended Exposure Limit.

Trade Names and Synonyms: Oil of vitriol, vitriol brown oil, battery acid, matting acid, H_2SO_4.

SECTION 3. HAZARDS IDENTIFICATION

Emergency Overview: A strong mineral acid present as a colorless and odorless oily liquid when pure but may appear yellow to dark brown when impure. Extremely corrosive to all body tissues, causing rapid tissue destruction and serious chemical burns. Skin or eye contact requires immediate first aid. Can decompose at high temperatures forming toxic gases such as sulfur oxides. Non-flammable but reacts violently with water generating large amounts of heat with potential for spattering of the acid. Can react with combustible materials to generate heat and ignition. Reacts with most metals, particularly when diluted with water, to form flammable hydrogen gas which may create an explosion hazard. It is highly toxic to aquatic organisms and plant life but does not bioaccumulate or concentrate in the food chain.

Potential Health Effects: Sulfuric acid is not very volatile and workplace exposures are therefore primarily due to accidental splashes or to processes or actions that generate an acid mist. It is extremely corrosive to all body tissues, causing rapid tissue destruction and serious chemical burns on contact with the skin or eyes. Skin or eye contact requires immediate first aid. Inhalation of sulfuric acid mist or fumes may produce irritation of the nose, throat and respiratory tract. High levels of acid mist are also irritating to the skin and eyes. Chronic inhalation of acid mist may cause pitting and erosion of tooth enamel. Sulfuric acid is not listed as a carcinogen by OSHA, NTP, IARC, ACGIH or the EU. IARC, the ACGIH and the NTP have concluded there is sufficient evidence that occupational exposure to strong inorganic acid mists containing sulfuric acid is carcinogenic or potentially carcinogenic to humans. (see Toxicological Information, Section 11)

Potential Ecological Effects: A strong mineral acid that could pose a significant threat to nearby watercourses. It is highly toxic to aquatic organisms and plant life but does not bioaccumulate or concentrate in the food chain. (see Ecological Information, Section 12)

EU Risk Phrase: R35 - Causes severe burns.

SECTION 4. FIRST AID MEASURES

Eye Contact: Immediately flush with warm, running water, including under the eyelids, for at least 15 minutes. Seek medical attention immediately. Flushing must begin immediately if permanent eye tissue damage is to be avoided.

Skin Contact: Immediately remove contaminated clothing and footwear under shower and thoroughly flush affected area. Seek immediate medical attention. Discard contaminated clothing, shoes and leather goods (e.g. watch bands, belts, etc.).

Inhalation: Remove victim from exposure area to fresh air immediately. If breathing has stopped, give artificial respiration. Medical oxygen may be administered, if available, where breathing is difficult. Seek medical attention immediately.

Ingestion: If victim is conscious and can swallow, dilute stomach contents with 2 to 4 cupfuls of water or milk. Do not induce vomiting. Seek medical attention immediately and bring a copy of this MSDS. Never give anything by mouth to an unconscious person.

SECTION 5. FIRE FIGHTING MEASURES

Fire and Explosion Hazards: Sulfuric acid is not flammable or combustible. However, fires may result from the heat generated by contact of concentrated sulfuric acid with combustible materials. Sulfuric acid reacts with most metals, especially when diluted with water, to produce hydrogen gas which can accumulate to explosive concentrations inside confined spaces. It reacts violently with water and organic materials evolving a considerable amount of heat and is very hazardous when in contact with carbides, cyanides, and sulfides.

Extinguishing Media: Use dry chemical or carbon dioxide extinguishers. Use water spray to cool fire-exposed containers. Use water only if absolutely necessary and DO NOT USE WATER DIRECTLY ON ACID as a violent reaction may occur resulting in spattering of the acid.

Fire Fighting: Fire fighters must be fully trained and wear full protective clothing including an approved, self-contained breathing apparatus which supplies a positive air pressure within a full facepiece mask. For fires close to a spill or where vapors are present, use acid-resistant personal protective equipment.

Flashpoint and Method: Not Applicable.

Upper and Lower Flammable Limit: Not Applicable.

Autoignition Temperature: Not Applicable.

SECTION 6. ACCIDENTAL RELEASE MEASURES

Procedures for Cleanup: Control source of release if possible to do safely. Contain spill, isolate hazard area, and deny entry to unauthorized personnel. Dike area around spill and pump uncontaminated acid back to process if possible. Neutralize spilled material with alkali such as sodium carbonate or sodium bicarbonate, soda ash, lime or limestone granules. Allow to stand for 1-2 hours to complete neutralization, then absorb any liquid in solid absorbent such as vermiculite or clay absorbents. Place spilled material in suitable labeled containers for final disposal. Treat or dispose of waste spilled material in accordance with all local, regional and national regulations.

Personal Precautions: Acid resistant protective clothing and gloves. Sleeves and pant legs and should be worn outside, not tucked into gloves and rubber boots. Use close-fitting safety goggles or a combination of safety goggles and a faceshield where splashing is a possibility. Respiratory protection equipment should be worn where exposure to hazardous levels of mist or fume is possible.

Environmental Precautions: This product can pose a threat to the environment. Contamination of soil and water should be prevented. Dike area to prevent flow to streams or sewers. Neutralize and dispose of in accordance with all applicable regulations.

SECTION 7. HANDLING AND STORAGE

Store in a dry, cool, well-ventilated area away from incompatible substances. Keep in tightly closed containers which are appropriately labeled. Do not allow contact with water. Do not store near alkaline substances. Always practice good personal hygiene. Refrain from eating, drinking, or smoking in work areas. Thoroughly wash hands before eating, drinking, or smoking.

EU Safety Phrase(s): S26 - in case of contact with eyes, rinse immediately with plenty of water and seek medical advice; S30 - never add water to this product.

SECTION 8. EXPOSURE CONTROLS / PERSONAL PROTECTION

Protective Clothing: Protective clothing and gloves as well as glasses, goggles or face shield. Appropriate protective clothing should be worn where any possibility exists that skin contact can occur. Use close-fitting safety goggles or a combination of safety goggles and a faceshield where any possibility exists that eye contact can occur. An eyewash and quick drench should be provided. Workers should wash immediately when skin becomes contaminated and at the end of each work shift.

Ventilation: Use adequate local or general ventilation to maintain the concentration of sulfuric acid aerosol mists below recommended occupational exposure limits.

Respiratory Protection: Where sulfuric acid mists are generated and cannot be controlled to within acceptable levels, use appropriate NIOSH-approved respiratory protection equipment (a combination of a 42CFR84 Class N, R or P-100 particulate filter and an acid gas cartridge).

SECTION 9. PHYSICAL AND CHEMICAL PROPERTIES

Appearance: Clear, Colorless, Oily Liquid	**Odor:** Odorless when cold	**Physical State:** Liquid	**pH:** Concentration dependant <0.1 (93% Sol'n), 0.3 (5% or 1N Sol'n)
Vapor Pressure: <0.001 mm Hg @ 20°C	**Vapor Density:** 1.2 kg/m^3	**Boiling Point/Range:** 280°C	**Freezing/Melting Point/Range:** -35°C
Specific Gravity: 1.84	**Evaporation Rate:** Not Applicable	**Coefficient of Water/Oil Distribution:** No Data Available	**Odor Threshold:** > 1 mg/m^3

Solubility in Water:
Completely soluble with generation of heat

SECTION 10. STABILITY AND REACTIVITY

Stability & Reactivity: Stable under normal temperatures and pressures. Decomposes at 340° C into sulfur trioxide and water. Extremely reactive with metals, alkalis and many other organic and inorganic chemicals. Hazardous gases such as hydrogen cyanide, hydrogen sulfide and acetylene are evolved on contact with chemicals such as cyanides, sulfides and carbides. Contact with combustible organic matter may cause fire or explosion. Dilution with water generates excessive heat and spattering or boiling may occur. Always add acid to water, NEVER ADD WATER TO ACID.

Incompatibilities: Combustible materials, organic materials, oxidizers, amines, bases, water, excess heat, and metals.

Hazardous Decomposition Products: Sulfur dioxide, sulfur trioxide.

SECTION 11. TOXICOLOGICAL INFORMATION

General: Concentrated sulfuric acid exerts a strong corrosive action on all tissues due to its severe dehydration action (removing water from tissues). The severity of the chemical burn produced by the concentrated acid is proportional to the strength of the acid and the duration of contact. Burns are deep but typically not severely painful. Prolonged exposure to dilute solutions or acid mists may lead to irritation of the eyes and skin causing chronic conjunctivitis and dermatitis. Inhalation of sulfuric acid mist or fumes may result in irritation of the respiratory tract possibly leading to laryngeal spasm. Asthmatics may be more sensitive to inhaling sulfuric acid mists. IARC and the ACGIH have concluded there is sufficient evidence that occupational exposure to strong inorganic acid mists containing sulfuric acid is carcinogenic or potentially carcinogenic to humans.

Acute:
Skin/Eye: Splashes can cause severe eye burns and may cause irreversible eye injury and possible blindness. Skin contact results in severe burns and may result in permanent scarring. High levels of sulfuric acid mists and aerosols are also irritating to the eyes and skin.

Inhalation: Inhalation may cause severe irritation of the respiratory tract with sore throat, coughing, shortness of breath, laryngeal spasm and delayed lung edema. These symptoms may be aggravated by physical exertion.

Ingestion: Ingestion is unlikely in industrial use but will result in severe burns to the mouth, throat, esophagus and stomach which could lead to permanent damage to the digestive tract. Small amounts of acid can also enter the lungs during ingestion or subsequent vomiting and cause serious lung injury.

Chronic: Prolonged exposure to dilute solutions or mists may result in eye irritation (chronic conjunctivitis) and produce skin dermatitis. Exposure to high concentrations of acid mist has caused erosion and discoloration of the anterior teeth. Sulfuric acid is

not listed as a carcinogen by OSHA, National Toxicology Program (NTP), International Agency for Research on Cancer (IARC), ACGIH or the EU. IARC has concluded that there is sufficient evidence that occupational exposure to strong inorganic acid mists containing sulfuric acid is carcinogenic to humans, resulting in an increased incidence of primarily laryngeal cancers. The ACGIH list strong inorganic acid mists containing sulfuric acid as a suspect human carcinogen (A2) and the NTP have recently re-classified strong inorganic acid mists containing sulfuric acid to a known human carcinogen. OSHA and the EU do not list sulfuric acid mist as a carcinogen.

SECTION 12. ECOLOGICAL INFORMATION

Sulfuric acid is very corrosive and can be harmful to aquatic and terrestrial life. Keep out of water. Neutralize any spills to ground.

SECTION 13. DISPOSAL CONSIDERATIONS

Do not wash down drain or allow to reach natural watercourses. Dispose of neutralized waste consistent with regulatory requirements. If neutralized with lime rock or soda ash, good ventilation is required during neutralization because of the release of carbon dioxide gas.

SECTION 14. TRANSPORT INFORMATION

Proper Shipping Name - Transport Canada.....Sulphuric acid
Proper Shipping Name - U.S. DOT.....Sulfuric acid
Transport Canada Hazard Classification.....8 (9.2), Packing Group II
U.S. DOT Hazard Classification.....8, Packing Group II
Transport Canada and U.S. DOT Product Identification Number.....UN1830
Marine Pollutant.....No
IMO Classification.....8

SECTION 15. REGULATORY INFORMATION

U.S.
Listed on TSCA Inventory.....Yes
Hazardous Under Hazard Communication Standard.....Sulfuric Acid Yes
CERCLA Section 103 Hazardous Substances..... Sulfuric Acid ..Yes RQ: 1000 pounds
EPCRA Section 302 Extremely Hazardous Substance.....Yes RQ: 1000 pounds
.....Threshold Planning Quantity: 1000 pounds
EPCRA Section 311/312 Hazard Categories
Immediate (Acute) Health Hazard - Corrosive
Immediate (Acute) Health Hazard - Highly Toxic

EPCRA Section 313 Toxic Release Inventory
Sulfuric Acid CAS NO. 7664-93-9 Percent by Weight 93

CANADIAN:
Listed on Domestic Substances List:.....Yes
WHMIS Classification.....Controlled Product, Classification D1A (Immediate & Serious Toxic Effects), E (Corrosive Material)

EUROPEAN UNION:
Listed on the European Inventory of Existing Commercial Chemical Substances (EINECS).....Yes
EU Classification: .....Corrosive

SECTION 16. OTHER INFORMATION

The information in this Material Safety Data Sheet is based on the following references:

- American Conference of Governmental Industrial Hygienists, 1991, Documentation of the Threshold Limit Values and Biological Exposure Indices, 6th Edition plus updates.
- American Conference of Governmental Industrial Hygienists, 1996, Guide to Occupational Exposure Values.
- American Conference of Governmental Industrial Hygienists, 1999, Threshold Limit Values for Chemical Substances and Physical Agents and Biological Exposure Indices.
- Canadian Centre for Occupational Health & Safety CHEMINFO Record No. 122 - Sulfuric Acid, 1998-08
- Clayton and Clayton, 1994, Patty's Industrial Hygiene and Toxicology, Fourth Edition.
- European Economic Community, Commission Directives 91/155/EEC, 93/21/EEC, and 67/548/EEC.
- Industry Canada, Controlled Products Regulations SOR/88-66, as amended.

- Lewis, Richard J., Sr., 1991, Hazardous Chemicals Desk Reference, Second Edition.
- Merck & Co., Inc., 1989, The Merck Index, An Encyclopedia of Chemicals, Drugs, and Biologicals, Eleventh Edition.
- National Library of Medicine, National Toxicology Information Program, 1996, Hazardous Substance Data Bank.
- Sax, N. Irving, 1984, Dangerous Properties of Industrial Materials, Sixth Edition.
- U.S. Department of Health and Human Services, Public Health Service, Agency for Toxic Substances and Disease Registry, 1994, Office, 1996, Integrated Risk Information System.
- U.S. Occupational Safety and Health Administration, 1989, Code of Federal Regulations, Title 29, Part 1910.

Notice to Reader

Although reasonable precautions have been taken in the preparation of the data contained herein, it is offered solely for your information, consideration and investigation. Teck Cominco American Incorporated extends no warranty and assumes no responsibility for the accuracy of the content and expressly disclaims all liability for reliance thereon. This material safety data sheet provides guidelines for the safe handling and processing of this product; it does not and cannot advise on all possible situations. Therefore, your specific use of this product should be evaluated to determine if additional precautions are required. Individuals exposed to this product should read and understand this information and be provided pertinent training prior to working with this product.

CENEX, Inc. P.O. Box 64089 St. Paul, Minnesota 55164-0089 Phone (612) 451-5151

DATE FEB 1994

MATERIAL SAFETY DATA SHEET

SECTION I

MANUFACTURERS NAME: CENEX, INC.
ADDRESS: PO BOX 64089, ST PAUL MN 55164-0089
TELEPHONE NO: (612) 451-5151
EMERGENCY TELEPHONE: (800) 424-9300 (CHEMTREC)
CHEMICAL NAME & SYNONYMS: PETROLEUM DISTILLATE
TRADE NAME & SYNONYMS: #2 FUEL OIL, #2 DIESEL FUEL, FIELDMASTER XL, #2 BURNER FUEL, 2X-1 BURNER FUEL, D-GRADE

SECTION II INGREDIENTS & HAZARDS

This material is hazardous as defined by OSHA's Hazard Communication Standard 29 CFR 1910.1200.

	CONCENTRATION %	C.A.S. NUMBER
Hazardous Ingredients:		
Complex Mixture of Paraffinic, Olefinic, Naphthenic, and Aromatic Hydrocarbons.	>99	68476-30-2

Hazardous Physical Properties:
Class II Combustible Liquid-NFPA

SECTION III PHYSICAL DATA

Boiling Point (F): Range 370-700

Vapor Pressure @ 68 F. (mmHg): 1-2

Solubility In Water: Negligible

Specific Gravity: 0.82-0.88

Percent Volatile: Nil
(By Volume %)

Vapor Density (Air=1): >1

Appearance & Odor: Mobile liquid with mild petroleum odor. Contains mandated dye.

SECTION IV FIRE & EXPLOSION DATA

Flash Point (F.): 100 minimum (P.M.)

Autoignition Temp (F.): 490

Flammability Limits: LFL 0.4%
UFL 8.0%

Extinguishing Media: Dry chemical, carbon dioxide, foam, water spray or fog. Use a smothering technique for extinguishing fire. A forced stream of water could scatter flames of burning fuels. Flammable vapors will be emitted from heated liquid.

Special Fire Fighting Procedures: Use water spray for cooling fire-exposed containers to prevent pressure rupture. Water runoff to sewer may carry combustible fuels and create a fire or explosion hazard. Firefighters should use self-contained breathing apparatus and protective clothing.

Unusual Fire & Explosion Hazards: Combustion by-products may contain carbon monoxide and other toxic materials.

NFPA Rating: Health 1 Fire 2 Reactivity 0

SECTION V HEALTH HAZARD DATA

Primary Route(s) of Exposure/Entry: Skin, Inhalation

TLV-TWA: 10 ppm; STEL 15ppm (Naphthalene)
PEL: 400 ppm TWA for Petroleum Distillates

Inhalation of excessive vapor or mist is irritating to respiratory passages and can lead to headache, dizziness, nausea, stupor, convulsions or loss of consciousness, depending on concentration and time of exposure. High vapor concentration or liquid contact can irritate eyes. Prolonged or repeated contact with skin can cause defatting, irritation, and dermatitis. Petroleum middle distillates have been shown to produce skin tumors in mice following repeated skin exposure without washing or removal. Also prolonged or repeated inhalation exposure to high concentrations has caused liver tumors in mice and adverse kidney effects in male rats. The exact relationship between these results and human health is not known. On the basis of animal studies, NIOSH recommends that whole diesel exhaust be regarded as potential carcinogen. Swallowing can cause gastro intestinal irritation, nausea, vomiting and diarrhea.

Aspiration into the lungs may cause pulmonary edema and chemical pneumonitis.

This material is not listed as a carcinogen by the NTP, IARC or OSHA.

SECTION VI EMERGENCY & FIRST AID INFORMATION

EYE CONTACT: Promptly flush with plenty of running water for at least 15 minutes, including under eyelids. Call a physician.

SKIN CONTACT: Remove contaminated clothing. Wash affected area with soap and water. If irritation develops, consult a physician.

INHALATION: Remove victim to fresh air. If breathing is difficult, administer oxygen. If breathing has stopped, give artificial respiration. Call a physician.

INGESTION: Contact a physician! Aspiration hazard! Do not induce vomiting. If spontaneous vomiting occurs, hold the victim's head lower than hips to help prevent pulmonary aspiration. Seek medical assistance for further treatment. Give two glasses of water. Never give anything by mouth to an unconscious person.

SECTION VII REACTIVITY DATA

This is a stable material in closed containers under normal storage and handling conditions. It does not polymerize. Heating greatly increases the flammability hazard of this OSHA Class II combustible liquid.

Stability: Stable X Unstable_____
Conditions To Avoid: Heat, flame and sparks.
Materials To Avoid: Oxidizing materials.
Hazardous Decomposition: Carbon monoxide and other toxic chemicals.
Hazardous Polymerization: May Occur_____ Will Not Occur X
Conditions To Avoid: N/A

Thermal-oxidative degradation can yield partial oxidation products, hydrocarbons, carbon monoxide and dioxide, and small amounts of sulfur dioxide (depending on sulfur content).

SECTION VIII SPILL OR LEAK PROCEDURES

Report spills as required to state and local authorities. Report spills that could reach any waterway to U.S. Coast Guard (800-424-8802). Advise National Response Center (800-424-8802) as required. In case of accident or road spill notify CHEMTREC (800-424-9300).

Notify safety personnel of leaks or spills. Remove sources of heat or ignition. Provide adequate explosion-proof ventilation. Clean-up personnel require protection against liquid contact and vapor inhalation. Dike to contain spill and collect liquid. Do not flush to sewer or surface water. Use absorbent material (sand, vermiculite) to pick up small spills and residues promptly to reduce fire or vapor hazard. Use non-sparking tools. Recover as much product as possible.

NOTE: Review fire and explosion hazards, use appropriate personal protective equipment.

Waste Disposal Method: May be disposed of through a licensed waste disposal company, by controlled incineration. Follow local, state and federal regulations.

SECTION IX SPECIAL PROTECTION INFORMATION

Use general and local exhaust ventilation (explosion-proof) to keep vapors below the TLV requirements in the workplace. Appropriate NIOSH respirator should be available for non-routine or emergency use when vapors are above the TLV.
Wear protective rubber gloves or prevent repeated or prolonged contact & safety glasses if splashing of liquid may occur. Additional protective clothing may be required depending on working conditions. Launder work clothes at least weekly and when contaminated before reuse. Eyewash stations and washing facilities should be available to areas of use and handling.

SECTION X TRANSPORTATION,STORAGE,SPECIAL PRECAUTIONS & COMMENTS

Storage Information: Store in closed containers in a well-ventilated area away from sources of heat, ignition and strong oxidizing agents. Protect containers from physical damage. Outdoor or detached storage preferred. Prevent static electric sparks and use explosion-proof electrical services.

Ground and bond containers to prevent static sparks when transferring material. No smoking in areas of use. Storage conditions must meet requirements for an OSHA Class II Combustible Liquid. Avoid prolonged or repeated skin contact and breathing of vapors or mists. Follow good hygienic practice in the use of this material. Launder oily rags before reuse. Wash hands and exposed skin frequently during work day. Do not weld or use cutting torch on empty containers since product residue may exhibit hazards associated with the material.

Proper Shipping Name: Fuel Oil
Hazard Class: Combustible Liquid
UN/NA No: NA 1993
DOT Label: None
DOT Placard: Combustible

SECTION XI REGULATORY INFORMATION, (NOT ALL INCLUSIVE)

SARA Title III Sections 302, 304, 311, 312, 313.
Section 302/304-Extremely Hazardous Substances (40 CFR 355) this material is not known to contain greater than 1.0% of any extremely hazardous substance. Section 311/312 MSDS and OSHA's Hazard Communication Standard (40 CFR 370). Under OSHA's Hazard Communication Standard (29 CFR 1910.1200) this product should be reported under the following EPA hazard categories:

__X__ Acute (immediate) Health Hazard
__X__ Chronic (delayed) Health Hazard
__X__ Fire
_____ Sudden Release of Pressure
_____ Reactive
_____ Not Applicable

Section 313 Toxic Chemical Components (40 CFR 372). This product contains the following chemicals at a concentration of 1.0% or greater if hazardous (0.1% or greater for carcinogens) identified as toxic and is subject to toxic chemical release reporting requirements.

Component	C.A.S. No	Approx Percent
Naphthalene	91-20-3	1-3
Biphenyl	92-52-4	0.5-1.5
1,2,4 Trimethylbenzene	95-63-6	0.5-2.0
Xylene	1330-20-7	1.0-2.5

The chemical ingredients in this material are on the U.S. Toxic Substance Control Act inventory and/or otherwise are in compliance with TSCA.

Federal Water Pollution Control Act, Clean Water Act, 40 CFR 401.15, 40 CFR 116.

This product contains the following components which is considered hazardous if spilled in navigable waters.

Component	Reportable Quantity
Petroleum Hydrocarbon	Film or sheen upon the water surface or discoloration of the water or shoreline

The information contained herein is based on data considered accurate. However, no warranty is expressed or implied regarding the accuracy of these data or the results to be obtained from the use thereof.
Vendor assumes no responsibility for injury to vendee or third persons proximately caused by the material if reasonable safety procedures are not adhered to as stipulated in the data sheet. Additionally, vendor assumes no responsibility for injury to vendee or third persons proximately caused by abnormal use of the material even if reasonable safety procedures are followed. Furthermore, vendee assumes the risk in his use of the material.

5-14-99

CONOCO®

MSDS MATERIAL SAFETY DATA SHEET

GASC0001 Revised 5-DEC-1997 Printed 10-DEC-1997

Gasoline, Unleaded

CHEMICAL PRODUCT/COMPANY IDENTIFICATION

Tradenames and Synonyms

Gasoline, Mid-Grade Unleaded
Gasoline, Premium Unleaded
Gasoline, Regular Unleaded
Gasoline, Super Unleaded
Gasoline, Premium Reformulated
Gasoline, Regular Reformulated
Gasoline, Oxygenated Program Reformulated
Blend Stock, Premium Reformulated
Blend Stock, Regular Reformulated

Company Identification

MANUFACTURER/DISTRIBUTOR
Conoco, Inc.
P.O. Box 2197
Houston, TX 77252

PHONE NUMBERS

Product Information	1-281-293-5550
Transport Emergency	CHEMTREC 1-800-424-9300
Medical Emergency	1-800-441-3637

COMPOSITION/INFORMATION ON INGREDIENTS

Components

Material	CAS Number	%
Gasoline		100
including:		
* Benzene	71-43-2	0.1-4.9
* Ethyl Benzene	100-41-4	2
* Cumene	98-82-8	1
* Pseudocumene	95-63-6	2

(Continued)

COMPOSITION/INFORMATION ON INGREDIENTS (Continued)

* Xylenes	1330-20-7 -12	
* Toluene	108-88-3 -15	
*MTBE (Methyl Tertiary Butyl Ether)	1634-04-4	0-17.5

* Disclosure as a toxic chemical is required under Section 313 of Title III of the Superfund Amendments and Reauthorization Act of 1986 and 40 CFR part 372.

HAZARDS IDENTIFICATION

Potential Health Effects

Primary Routes of Entry: Skin, inhalation

Studies of industry employees have indicated that workers exposed many years to high concentrations of benzene have a higher incidence of acute myelogenous leukemia. Benzene can also be toxic to the blood and blood-forming tissues.

The product may cause irritation to the eyes, nose, throat, lungs, and skin after prolonged or repeated exposure. Extreme overexposure or aspiration into the lungs may cause lung damage or death. Overexposure may cause weakness, headache, nausea, confusion, blurred vision, drowsiness, and other nervous system effects; greater overexposure may cause dizziness, slurred speech, flushed face, unconsciousness, and convulsions.

Inhalation of xylene can cause nausea, headache, weakness, dizziness, confusion, incoordination, and loss of consciousness; skin sensitization has occasionally occurred. Ingestion can cause gastrointestinal irritation and symptoms of central nervous sytem depression; aspiration into the lungs may be lethal. High exposures can cause skin, eye, nose, and throat irritation; heart stress; anemia; respiratory difficulties; bleeding from mucosal surfaces; liver and kidney effects; and death.

Methyl tertiary butyl ether (MTBE) may cause irritation to the eyes, skin and lungs after prolonged or repeated exposure. The odor of MTBE may be offensive and possibly cause headaches, difficult breathing, skin and eye irritation, dizziness, and indigestion.

Combustion Product:
Carbon monoxide is a gas that can result from incomplete combustion of hydrocarbons, from detoxification of some chemicals like methylene chloride, tobacco smoke, and even from natural body processes. Carbon monoxide binds tightly to hemoglobin and interferes with oxygen transport to body tissues. Overexposure can cause headache, nausea, nervous system depression, coma, and death.

(Continued)

HAZARDS IDENTIFICATION (Continued)

Carcinogenicity Information

The following components are listed by IARC, NTP, OSHA or ACGIH as carcinogens.

Material	IARC	NTP	OSHA	ACGIH
Benzene	X	X	X	X

DuPont controls the following materials as carcinogens: ^^
Benzene.

FIRST AID MEASURES

First Aid

INHALATION

If inhaled, remove to fresh air. If not breathing, give artificial respiration. If breathing is difficult, give oxygen. Call a physician.

SKIN CONTACT

Wash skin thoroughly with soap and water. If irritation develops and persists, consult a physician.

EYE CONTACT

In case of contact, immediately flush eyes with plenty of water for at least 15 minutes. Call a physician.

INGESTION

If swallowed, do not induce vomiting. Immediately give 2 glasses of water. Never give anything by mouth to an unconscious person. Call a physician.

Notes to Physicians

Activated charcoal mixture may be beneficial. Suspend 50 g activated charcoal in 400 mL water and mix well. Administer 5 mL/kg, or 350 mL for an average adult.

THIS MATERIAL MAY MAKE THE HEART MORE SUSCEPTIBLE TO ARRHYTHMIAS. Catecholamines such as adrenaline, and other compounds having similar effects, should be reserved for emergencies and then used only with special caution.

(Continued)

FIRE FIGHTING MEASURES

Flammable Properties

Flash Point	As low as -50 F
Method	TCC
Flammable limits in Air, % by Volume	
LEL	< 1
UEL	8
Autoignition	536-853

Vapor forms explosive mixture with air. Vapors or gases may travel considerable distances to ignition source and flash back.

Extinguishing Media

Foam, Dry Chemical, CO2.

Fire Fighting Instructions

Water may be ineffective to extinguish but water should be used to keep fire-exposed containers cool. If a leak or spill has not ignited, use water spray to disperse the vapors and to protect personnel attempting to stop a leak. Water spray may be used to flush spills away from sources of potential ignition.

Highly flammable. Products of combustion may contain carbon monoxide, carbon dioxide, and other toxic materials. Do not enter enclosed or confined space without proper protective equipment including respiratory protection.

ACCIDENTAL RELEASE MEASURES

Safeguards (Personnel)

NOTE: Review FIRE FIGHTING MEASURES and HANDLING (PERSONNEL) sections before proceeding with clean-up. Use appropriate PERSONAL PROTECTIVE EQUIPMENT during clean-up.

Remove source of heat, sparks, flame, impact, friction and electricity including internal combustion engines and power tools. If equipment is used for spill cleanup, it must be explosion proof and suitable for flammable liquid and vapor.

NOTE: Vapors released from the spill may create an explosive atmosphere.

Initial Containment

Dike spill. Prevent material from entering sewers, waterways or low areas.

Spill Clean Up

Soak up with sawdust, sand, oil dry or other absorbent material.

(Continued)

HANDLING AND STORAGE

Handling (Personnel)
Avoid breathing vapors or mist. Avoid contact with eyes, skin, or clothing. Wash thoroughly after handling. Wash clothing after use.

Handling (Physical Aspects)
Use of non-sparking and explosion-proof equipment may be necessary depending on type of operation. Keep away from heat, sparks and flames. Close container after each use.

Storage
Store in accordance with National Fire Protection Association recommendations.

EXPOSURE CONTROLS/PERSONAL PROTECTION

Engineering Controls
Keep container tightly closed.

VENTILATION
Storage and use areas should be well ventilated. Explosion proof mechanical ventilation should be used in enclosed areas.

Personal Protective Equipment
RESPIRATORY PROTECTION
A NIOSH/MSHA approved air purifying respirator with an organic vapor cartridge or canister may be permissible under certain circumstances where airborne concentrations are expected to exceed exposure limits. Protection provided by air purifying respirators is limited. Use a positive pressure, air supplied respirator if there is any potential for an uncontrolled release, exposure levels are not known, or any other circumstances where air purifying respirators may not provide adequate protection. Proper respirator selection should be determined by adequately trained personnel and based on the contaminant(s), the degree of potential exposure, and published respirator protection factors.

PROTECTIVE GLOVES
Should be worn when the potential exists for prolonged or repeated exposure. NBR recommended.

EYE PROTECTION
Chemical splash goggles or face shield for spray/mists or if splashing can occur.

OTHER PROTECTIVE EQUIPMENT
Sufficient protective clothing to minimize skin exposure.

 # Exposure Guidelines
Applicable Exposure Limits
Benzene

PEL	(OSHA)	1 ppm, 8 Hr. TWA
		5 ppm, STEL

(Continued)

EXPOSURE CONTROLS/PERSONAL PROTECTION (Continued)

	0.5 ppm, Action Level
TLV (ACGIH)	0.5 ppm, 1.6 mg/m3, 8 Hr. TWA, Skin, A1
	STEL 2.5 ppm, 8 mg/m3, A1
AEL * (DuPont)	1 ppm, 8 & 12 Hr. TWA
	5 ppm, 15 minute TWA
Ethyl Benzene	
PEL (OSHA)	100 ppm, 435 mg/m3, 8 Hr. TWA
TLV (ACGIH)	100 ppm, 434 mg/m3, 8 Hr. TWA
	STEL 125 ppm, 543 mg/m3
AEL * (DuPont)	None Established
Cumene	
PEL (OSHA)	50 ppm, 245 mg/m3, 8 Hr. TWA, Skin
TLV (ACGIH)	50 ppm, 246 mg/m3, 8 Hr. TWA, Skin
AEL * (DuPont)	None Established
Pseudocumene	
PEL (OSHA)	25 ppm, 125 mg/m3, 8 Hr. TWA
TLV (ACGIH)	25 ppm, 123 mg/m3, 8 Hr. TWA
AEL * (DuPont)	None Established
Xylenes	
PEL (OSHA)	100 ppm, 435 mg/m3, 8 Hr. TWA
TLV (ACGIH)	100 ppm, 434 mg/m3, 8 Hr. TWA, A4
	STEL 150 ppm, 651 mg/m3, A4
AEL * (DuPont)	100 ppm, 8 & 12 Hr. TWA
	150 ppm, 15 minute TWA
Toluene	
PEL (OSHA)	200 ppm, 8 Hr. TWA
	300 ppm, Ceiling
	500 ppm - 10 Min. Max.
TLV (ACGIH)	50 ppm, 188 mg/m3, 8 Hr. TWA, Skin, A4
AEL * (DuPont)	50 ppm, 8 & 12 Hr. TWA
MTBE (Methyl Tertiary Butyl Ether)	
PEL (OSHA)	None Established
TLV (ACGIH)	40 ppm, 144 mg/m3, 8 Hr. TWA, A3
AEL * (DuPont)	None Established

* AEL is DuPont's Acceptable Exposure Limit. Where governmentally imposed occupational exposure limits which are lower than the AEL are in effect, such limits shall take precedence.

PHYSICAL AND CHEMICAL PROPERTIES

Physical Data

Boiling Point	85-437 F (29-225 C)
Vapor Pressure	200-475 mm Hg @ 68 F (20 C)
Vapor Density	>1 (AIR = 1)
% Volatiles	(by volume) 100
Solubility in Water	May be slightly soluble
Odor	Gasoline
Form	Liquid

(Continued)

PHYSICAL AND CHEMICAL PROPERTIES(Continued)

Color	*
Specific Gravity	0.7-0.77

*Color : Water white to straw yellow
(Super/premium may be dyed red.)

STABILITY AND REACTIVITY

Chemical Stability
Stable.

Conditions to Avoid
Avoid undue exposure to air. Avoid heat, sparks, and flame.

Incompatibility with Other Materials
Incompatible or can react with strong oxidizers.

Decomposition
Carbon monoxide may be formed from incomplete combustion.

Polymerization
Polymerization will not occur.

TOXICOLOGICAL INFORMATION

Animal Data
Animal studies have shown that prolonged or repeated inhalation exposures to high concentrations of some petroleum distillates have caused liver tumors in mice and kidney damage and tumors in male rats. However, kidney effects were not seen in similar studies involving female rats, guinea pigs, dogs, or monkeys. Present studies indicate the kidney effects will only occur in male rats. Also, human studies do not indicate this peculiar sensitivity for kidney damage and studies reported in 1992 showed that this particular type of rat kidney damage is not useful in predicting a human health hazard. The significance of liver tumors in mice exposed to high doses of chemicals is highly speculative and probably not a good indicator for predicting a potential human carcinogenic hazard.

One published study reports limited data suggesting long-term ingestion of 500 mg/kg of toluene caused increased malignant tumors in rats. Other more extensive inhalation studies demonstrated no carcinogenic effects in animals. Animal studies with toluene have failed to demonstrate birth defects in rats and mice. However, toluene has been shown to cause delayed growth and extra ribs in the offspring of rats and mice at inhaled doses (266-399 ppm) that were non-toxic to the mother. Toluene has not been conclusively shown to cause adverse reproductive effects in humans. Toluene overexposure may also cause cardiac irregularities and hearing loss (animal data).

(Continued)

TOXICOLOGICAL INFORMATION (Continued)

Mice and rats were exposed 6 hours daily to MTBE (400, 3000, or 8000 ppm) for 82-105 weeks; no toxicity occurred at 400 ppm (except some kidney damage in male rats) but the two higher concentrations caused a toxic response that included decreased body weight, ataxia, reduced startle response, kidney damage and tumors (only male rats), and liver tumors (female mice in only the 8000 ppm exposed group). High exposure hydrocarbon-induced male rat kidney tumors and mouse liver tumors are probably not useful in predicting a significant human health hazard; future animal studies will further evaluate this tumorigenic response to MTBE. Animal studies involving daily exposure (3000 ppm) showed no significant reproductive toxicity or nerve damage. In mice daily exposure above 1000 ppm caused material toxicity, cleft palate, and increased skeletal variations in newborn mice but the presence of maternal toxicity limits the significance of these findings.

XYLENE:

Eye:
Animal testing indicates this material is an eye irritant.

Skin:
ALD, rabbit: 4,320 mg/kg (Moderately toxic)
Animal testing indicates this material is a moderate to severe skin irritant. This material has not been tested for skin sensitization. Single exposure to high doses caused: Narcosis.

Ingestion:
LD50, rat: 4,500 mg/kg (Slightly toxic).
Single exposure caused: Prostration and incoordination.
Repeated exposure caused: Shallow respiration, prostration, liver and kidney effects, reduced weight gain, and altered hematology and clinical chemistry. Long-term exposure caused: Decreased body weight and histopathological changes of the liver.

Inhalation:
4 hour, LC50, rat: 6,700 ppm (Very low toxicity).
Single exposure caused: Upper respiratory tract irritation, behavioral effects, incoordination, prostration, altered respiratory rate, low blood pressure, and altered hematology.
Repeated exposure caused: Incoordination; decreased response to sound; histopathological changes of the liver, kidneys, adrenals, heart, spleen, lungs, and bone marrow; altered hematology; [illegible] exposure caused: Liver effects.

Additional Toxicological Effects of Xylene:
One published study reports limited data suggesting high oral doses caused an increase in malignant tumors in rats. However, other more extensive animal studies have demonstrated no evidence of carcinogenicity.

Animal data show developmental effects only at or near levels producing other toxic effects in the adult animal. Reproductive data on adult animals show: No change in reproductive

(Continued)

TOXICOLOGICAL INFORMATION(Continued)

performance. Tests have shown that this material does not cause genetic damage in bacterial or mammalian cell cultures, or in animals. In animal testing, this material has not caused permanent genetic damage in reproductive cells of mammals (has not produced heritable genetic damage).

ECOLOGICAL INFORMATION

Ecotoxicological Information

AQUATIC TOXICITY:

Toluene
Moderately toxic.
96 hour LC50 - Fathead minnows: 31.7 mg/L.

Xylenes
Moderately toxic.
96 hour LC50 - Fathead minnows: 24-42 mg/L.

MTBE (Methyl Tertiary Butyl Ether)
Low toxicity.
96 hour LC50 - Fathead minnows: 706 mg/L

DISPOSAL CONSIDERATIONS

Waste Disposal

Treatment, storage, transportation, and disposal must be in accordance with applicable Federal, State/Provincial, and Local regulations. Do not flush to surface water or sanitary sewer system.

By itself, the liquid is expected to be a RCRA ignitable hazardous waste.

TRANSPORTATION INFORMATION

Shipping Information

DOT

Proper Shipping Name	Gasoline
Hazard Class	3
[illegible] (UN/NA)	UN1203
Packing Group	[illegible]
DOT Label(s)	Flammable liquid
DOT Placard	Flammable

(Continued)

REGULATORY INFORMATION

U.S. Federal Regulations

OSHA HAZARD DETERMINATION
This material is hazardous as defined by OSHA's Hazard Communication Standard, 29 CFR 1910.1200.

CERCLA/SUPERFUND
Not applicable; this material is covered by the CERCLA petroleum exclusion. Releases are not reportable.

SARA, TITLE III, 302/304
This material is not known to contain extremely hazardous substances.

TITLE III HAZARD CLASSIFICATIONS SECTIONS 311, 312

Acute : Yes
Chronic : Yes
Fire : Yes
Reactivity : No
Pressure : No

SARA, TITLE III, 313
This material contains the following chemical(s) at a level of 1.0% or greater (0.1% for carcinogens) on the list of Toxic Chemicals and is subject to toxic chemical release reporting requirements:

Toxic Chemical(s) See Composition Section

TSCA
Material and/or components are listed in the TSCA Inventory of Chemical Substances (40 CFR 710).

RCRA
This material, when discarded or disposed of, is not specifically listed as a hazardous waste in Federal regulations; however, it meets criteria for being ignitable according to U. S. EPA definitions (40 CFR 261). This material could also become a hazardous waste if it is mixed with or comes in contact with a listed hazardous waste. If it is a hazardous waste, regulations at 40 CFR 262-266 and 268 may apply.

CLEAN WATER ACT
The material contains the following ingredient(s) which is considered hazardous in addition [illegible] navigable waters and therefore reportable to the National Response Center (1-800-424-8802).

Ingredient(s)	Petroleum Hydrocarbons
Reportable Quantity	Film or sheen upon, or discoloration of, any water surface

(Continued)

REGULATORY INFORMATION (Continued)

State Regulations (U.S.)

CALIFORNIA "PROP 65"
The material contains ingredient(s) known to the State of California to cause cancer, birth defects, or other reproductive harm. Read and follow all label directions.

Ingredient	Benzene, Toluene, Unleaded Gasoline (Wholly Vaporized)

PENNSYLVANIA WORKER & COMMUNITY RIGHT TO KNOW ACT
This material may contain the following ingredient(s) subject to the Pennsylvania Worker and Community Right to Know Hazardous Substances List.

Ingredient	Benzene
Category	Special Hazardous Substance, Environmental Hazard
Ingredient	Gasoline
Category	Hazardous Substance
Ingredient	Cumene
Category	Environmental Hazard, Hazardous Substance
Ingredient	Ethyl Benzene, Pseudocumene, MTBE, Toluene, Xylene
Category	Environmental Hazards

Canadian Regulations

CLASS B Division 2 - Flammable Liquid.

CLASS D Division 2 Subdivision A - Very Toxic Material. Carcinogen.

CLASS D Division 2 Subdivision B - Toxic Material. Chronic Toxic Effects, Skin or Eye Irritant.

Transport/Medical Emergency Phone Number: 1-613-348-3616

OTHER INFORMATION

NFPA, NPCA-HMIS

NFPA Rating

Health	1
Flammability	3
Reactivity	0

NPCA-HMIS Rating

Health	2 (Chronic Health Effects)
Flammability	3
Reactivity	0

Personal Protection rating to be supplied by user depending on use conditions.

Additional Information

Product Use : Automotive Gasoline

(Continued)

PETROLANE MATERIAL SAFETY DATA SHEET

18

P.O. Drawer 1410 - 1600 E. Hill St., Long Beach, CA 90801
Contact: Safety Department - Telephone: (213) 427-5471

February 1989

WARNING STATEMENT

DANGER! Extremely Flammable. Keep away from heat, sparks and open flame. Vapor reduces oxygen available for breathing and may cause suffocation in confined spaces. Use only with adequate ventilation. Odor may not provide adequate warning of potentially hazardous concentrations. Vapor is heavier than air and collects in low levels. Liquid may cause freeze burn similar to frostbite.

I. Product Identification

Product Name: Petrolane Propane
Chemical Name: Propane
Synonyms: LP-Gas, Bottled Gas
Chemical Family: Paraffinic Hydrocarbon
Chemical Formula: C_3H_8
DOT Proper Shipping Name: Liquefied Petroleum Gas
DOT Hazard Class: Flammable Gas
DOT I.D. Number: UN1075

Transportation Emergency Telephone:
800-424-9300 (CHEMTREC)

NFPA Classification:

Health	1	Slightly Toxic
Fire	4	Extremely Flammable
Reactivity	0	Stable

II. Hazardous Ingredients

Component	CAS Number	%	OSHA PEL	ACGIH TLV
Ethane	74-84-0	0-6	None established	Simple asphyxiant
Propane	74-98-6	87-97	1000 ppm (8hr)	Simple asphyxiant
Propylene	115-07-1	0-5	None established	Simple asphyxiant
Butane	106-97-8	0-2.5	None established	800 ppm (8 hr)

III. Physical Data

Boiling Point: -44°F
Melting Point: -309°F
Vapor Pressure: 208 psig (max.) @ 100°F
Vapor Density (Air=1): 1.5
Specific Gravity (H_2O=1): 0.504

% Volatile by Volume: 100%
Solubility in Water: Insoluble
Evaporation Rate(Bu Ac=1): N/A
Gas Volume @ Atm. Pressure & 60°F (Cu. ft. gas/gal. liquid): 36.4

Appearance and Odor: Colorless, odorless in pure form.
Propane contains a foul smelling, skunk-like warning agent(odorant). The odorant is effective, in most instances, but not everyone can smell the odor. The ability of people to detect odors varies widely. Also, certain chemical reactions with material in the propane system can reduce the propane odor level. No odorant will be 100% effective in all circumstances. If odor level appears to be weak, notify propane supplier immediately.

IV. Fire and Explosion Data

Flash Point (Method Used): -156°F (estimated)
Flammable Limits (% Volume in Air): Lower 2.1% Upper 9.5%

Extinguishing Media: Dry chemical, foam or CO_2 for small fires. Stop flow of gas first.

Special Fire Fighting Procedures and Precautions: Elimimate sources of ignition. Evacuate area. Notify fire department. Allow only trained, properly protected personnel in area. Shut off source of gas, if possible. Allow fire to burn itself out after gas flow is shut off. High volume water supply can be used to cool heat-exposed pressure containers and nearby equipment. Approach a flame enveloped container from the side, never the head ends. Use extreme caution when applying water to a container which has been exposed to heat or flame for more than a short time. Shock of cool water on hot metal could cause container rupture. For uncontrollable fires and when flame is impinging on container, withdraw all personnel and evacuate surrounding vicinity immediately.

Unusual Fire and Explosion Hazards: Products of combustion may yield carbon monoxide, a toxic gas. Uncontrolled vapors spread rapidly, are heavier than air and are extremely flammable.

V. Reactivity Data

Stability: Stable Conditions to Avoid: High heat, sparks, open flame
Materials to Avoid: Strong oxidizing agents
Hazardous Decomposition Products: Incomplete combustion can cause carbon monoxide, a toxic gas.
Hazardous Polymerization: Will not occur Conditions to Avoid: None

VI. Health Hazard Data

Product is not listed as carcinogenic by NTP, IARC or OSHA. Product may contain a trace, but detectable amount of benzene, a chemical listed by the State of California and known to cause cancer or reproductive toxicity.

Routes of Entry / Acute Effects of Overexposure:

Inhalation: Exposure to high concentrations of the vapor causes dizziness, drowsiness, nausea or unconsciousness due to anesthetic properties.

Skin Contact: Liquid can cause freeze burns similar to frostbite if contact with skin occurs. No skin absorption is expected.

Eye Contact: Liquid can cause freeze burns if contact with eyes occurs.

Ingestion: Ingestion is not expected to occur in normal use.

Chronic Effects of Overexposure: No abnormal reactions reported following exposure to 1000 ppm for 8 hours per day, 5 days per week, for 2 weeks.

Medical Conditions Generally Aggravated by Exposure: Persons with chronic respiratory diseases should avoid exposure.

VII. Emergency and First Aid Procedures

Eye Contact: Flush with water. Obtain medical assistance if contact with liquid has occurred.

Skin Contact: If freeze burn occurs, remove contaminated clothes, shoes and jewelry. Immerse burned area in warm (not hot) water. Keep immersed. Call for medical assistance.

Inhalation: Remove victim from further exposure and into fresh air. Provide oxygen if breathing is labored. If victim is unconscious, seek immediate medical attention. If breathing has stopped, give artificial respiration.

Ingestion: Not expected to occur in normal use.

VIII. Spill or Leak Procedures

Product is extremely flammable. Vapor is heavier than air and may collect at lower levels. Flammable concentrations may be present below nose level. If there is a leak but no fire, do not light the escaped gas. Eliminate all ignition sources. Do not smoke, use a nearby phone or actuate electrical switches. Evacuate the area. If possible, remove leaking container to safe area. Stop flow of gas or allow vapor to disperse in a safe area. Water spray can be used to help dilute vapor concentration in air.

Dispose of gas only by controlled burning in compliance with local laws and regulations.

IX. Handling and Storage Precautions

Store in an authorized location (outside, detached storage is preferred) with adequate ventilation. Keep away from heat and ignition sources. Inspect cylinders frequently for leaks, dents, gouges and corrosion with emphasis on bottom of cylinder. Store cylinders in upright position or with pressure relief valves in vapor space. Do not drop or abuse cylinders. Keep container valve closed and plugged when not in use. Install protective caps when cylinders are not connected for use. Empty containers retain some residue, so they should be treated as if they are full.

X. Personal Protection Information

Ventilation: Use adequate ventilation to maintain exposures below recommended limits.

Respiratory Protection: Use a NIOSH approved respirator if area is thought to contain unknown concentration of gas.

Eye Protection: Use safety goggles or safety glasses with side shields.

Protective Clothing: No special garments are necessary, but avoid skin contact with liquid because of possibility of freeze burn. Propane resistant gloves are recommended.

XI. Communication with Employees and Purchasers

This Material Safety Data Sheet (MSDS) alerts the reader to the potential safety and health hazards of propane. It also contains valuable reference material relating to the safe use and handling of the product. Make sure that this information is shared with all employees and purchasers who use or handle the product. It is an important part of the OSHA hazard communication program.

This information is believed to be accurate as of the date of issue, but is offered without guarantee. Conditions of use and suitability for use are beyond Company control, therefore, all risks of use of the product are assumed by the user. COMPANY EXPRESSLY DISCLAIMS ALL WARRANTIES OF EVERY KIND INCLUDING WARRANTIES OF MERCHANTIBILITY AND FITNESS FOR ANY PARTICULAR PURPOSE. Company assumes no responsibility for any injuries or damages caused by the product even if safety procedures are followed as outlined herein. Nothing herein is intended to be construed as permission or recommendation for use of the product in any manner which might infringe existing patents.

5-21-99

93623-349

Aslchem International Inc.
100-9451 Van Horne Way,
Richmond, B.C.,
Canada V6X 1W2

Material Safety Data Sheet

Material: Barium Compounds, N.O.S. (Barium Chloride, Dihydrate)
PIN No.: UN1564

24 Hours Emergency Telephone Number = Canutec Call Collect (613)996-6666

Hazard Rating: National Fire Protection Association
4 = Extreme, 3 = High, 2 = Moderate, 1 = Slight, 0 = Insignificant, * = Chronic Health Hazard (See Sec. 6)
Fire = 0 Health = 2 Reactivity = 0 Special = None

SECTION 1. Identification of Product

Trade Name/Chemical Name:
Barium Chloride, Dihydrate

Synonyms:
Barium Dichloride

Chemical & Physical State: Solid

Molecular Formula: $BaCl_2 \cdot 2H_2O$

Chemical Family: Inorganic Salt

CAS No.: 10361-37-2

SECTION 2. Physical Properties

Appearance & Odour:
Odourless, white crystals

Boiling Point (degree C):
1560

Freezing Point (degree C):
963

Vapour Pressure (mm Hg):
< 0.1 mm Hg @ 20 Degree C

Specific Gravity (water = 1 at 4 degree C): 3.097

Bulk Density: N/A

Vapour Density (Air = 1): N/A

Solubility in Water: Not applicable

Other Solvents: Not applicable

pH: 5.0 - 8.0 (5% Solution)

SECTION 3. Fire & Explosion Hazard Data

Flash Point (degree C) & Method:
Non flammable

Autoignition Temperature (degree C):
Not applicable

Flammable Limits (% by vol. in air):
None

Lower: N/App
Upper: N/App

Would any material saturated with this product be subject to spontaneous combustion?
[X] Yes [ ] No Materials: Barium Oxide, Hydrochloric Acid, Hydrogen Chloride Gas

Fire Extinguishing Media: Use any means suitable for surrounding fire.
Fire Fighting Procedures: Barium Chloride is toxic if ingested. Wash away any material which may have contacted the body with copious amount of water.
Other Fire or Explosion Hazards: None

Aslchem International Inc.
100-9451 Van Home Way,
Richmond, B.C.,
Canada V6X 1W2

Material Safety Data Sheet

Material: Barium Compounds, N.O.S. (Barium Chloride, Dihydrate)
PIN No.: UN1564

SECTION 4. Reactivity Data

Stability: [X] Stable [ ] Unstable

Conditions to Avoid: Decomposes with excessive heat
Incompatibility (materials to avoid): Strong oxidizers, metals, hydrides, hydroxides, nitrates, oxides, sulphates, and sulphides
Hazardous Decomposition or Combustion Products: Barium Oxide, Hydrochloric Acid, Hydrogen Chloride Gas

Hazardous Polymerization: [ ] May occur [X] Will not occur

SECTION 5. Health Hazard Data

Threshold Limit Value (TLV):
0.5 mg/m3 (as Ba)

LC50: N/A
LD50: LD50 (oral, rat), 118 mg/kg

Effects of Acute Exposure to Product: Barium chloride is toxic and an eye, skin and mucous membrane irritant. May be fatal if inhaled, swallowed or absorbed through the skin. Poisoning may affect the kidneys, cardiovascular and central nervous systems. Persons with chronic respiratory, cardiovascular or skin disease may be at an increased risk ffrom exposure.

Inhaled - May cause irritation of the respiratory tract with sore throat, coughing & laboured breathing. If sufficient amounts are absorted, symptoms may resemble those in acute ingestion.
In contact with eyes; May cause severe irritation
In contact with skin; May cause irritation & dermatitis. If sufficient amounts are absorbed, effects may occur as in acute ingestion.
Ingested; Poisonous when ingested. May cause vomiting and diarrhea.

Emergency and First Aid Procedures:
Inhalation - Remove from exposure area to fresh air immediately. If breathing has stopped, perform artificial respiration. Keep person warm and at rest. Treat symptomatically & supportively. Get medical attention immediately
Eyes- Wash eyes immediately with large amounts of water or normal saline, lifting upper & lower lids, until no evidence of chemical remains (approximately 15-20 minutes). Get medical attention immediately
Skin - Remove contaminated clothing and shoes immediately, wash affected area with soap or mild detergent and large amount of water until no evidence of chemical remains (approximately 15-20 minutes). Get medical attention immediately.
Ingestion - Induce vomiting immediately when soluble barium compounds are ingested. Treat supportively and symptomatically (Parmeggiani, Encyclopedia of Occupational Health & Safety, 3rd edition). Get medical attention immediately.

Asichem International Inc.
100-9451 Van Horne Way,
Richmond, B.C.,
Canada V6X 1W2

Material Safety Data Sheet

Material: Barium Compounds, N.O.S. (Barium Chloride, Dihydrate)
PIN No.: UN1564

SECTION 6. Special Protection Information

Ventilation Requirements:
Local exhaust ventilation required

Respiratory Protection: NIOSH/MSHA approved respirator

Skin Protection: Imervious rubber gloves, apron & general protective clothing

Eye Protection: Safety glasses or goggles / or full face shield

Other Protective Equipment: Ensure that emergency shower & eye wash facilities are in working order & within easy access.

SECTION 7. Special Requirements

Precaution in Handling and Storing: Avoid genreating dust. Avoid contact with skin, eyes & clothing. Follow routine safe handling procedures. Store in a tightly closed container in a cool, dry well-ventilated area. Store away from incompatible materials.
Other Precautions: Wear protective equipment when handling

SECTION 8. Spill or Leak Procedures

Steps to be taken in event of spill or release (in all cases notify applicable Government Authority if spill is significant): Shovel up spill and place in a suitable container for disposal. Wash site of spillage thoroughly with water & detergent.

Environmental Effects: Harmful to aquatic life in low concentrations. Prevent entry into potable water intakes & waterways. Human toxicity, critical concentration - 1.0 mg/l; fish toxicity, critical concentration - 10,000 mg/l

Neutralizing Chemicals: In some cases, Sodium Sulphate or Magnesium Sulphate can be used to precipitate Barium as insoluble Barium Sulphate.

Waste Disposal: Consult environmental authorities before taking any action. Observe all federal, provincial & local regulations when disposing of this substance.

SECTION 9. Transportation & Regulatory Information

Shipping Name: Barium [illegible] PIN: UN1564
[illegible] Marine Pollutant : Yes WHMIS: D1B, D2B

SECTION 10. References

1) SAX, N. Irving., Dangerous Properties of Industrial Chemicals. 6th Ed., 1984.
2) "Cheminfo", through "CCINFOdisc", Canadian Centre for Occupational Health and Safety, Hamilton, Ontario, Canada.

N/A : Not Available N/App : Not Applicable

"Information contained herein is provided without any warranty, and Asichem International will not be liable for any damage which may result from the use or reliance on any information contained herein"

724/728-1847
FAX: 724/728-3440

MATERIAL SAFETY DATA SHEET
NS 1100

1. IDENTIFICATION OF THE PRODUCT AND THE COMPANY

Product name : NS 1100

Supplier : Neo Solutions, Inc.
PO Box 26
Beaver, PA 15009

Emergency telephone # : 724/728-1847

2. COMPOSITION/INFORMATION ON INGREDIENTS

Description
Polyacrylic Acid - as acid or various neutralizations with sodium or ammonuim hydroxide.

3. HAZARDS IDENTIFICATION

Irritating to eyes and skin.
Spills produce extremely slippery surfaces.

HMIS & NFPA Ratings :

	HMIS	NFPA
Health :	1	1
Flammability :	0	0
Reactivity :	1	1

Special : To be determined by user

4. FIRST AID MEASURES

Inhalation : Move to fresh air. Consult a physician in case of irritation or other symptoms.

Skin contact : Wash off immediately with soap and plenty of water. In case of skin irritation, consult a physician.

Eye contact : Rinse with plenty of water. In case of persistent eye irritation, consult a physician.

Ingestion : Do not induce vomiting. Consult a physician if discomfort or other symptoms develop.

5. FIRE-FIGHTING MEASURES

Suitable extinguishing media
Foam, carbon dioxide (CO2), or dry chemical.

Special Fire-fighting precautions
Spills produce extremely slippery surfaces

Special protective equipment for firefighters
NIOSH approved self-contained breathing apparatus.

6. ACCIDENTAL RELEASE MEASURES

Personal precautions
No special precautions required.

Environmental precautions
Avoid contaminating water.

Methods for cleaning up
Do not flush with water. Dam up. Soak up with inert absorbent material. If liquid has been spilt in large quantities clean up promptly by scoop or vacuum. Keep in suitable and closed containers for disposal. After cleaning, flush away traces with water.

7. HANDLING AND STORAGE

Handling
For good industrial hygiene, avoid contact with skin and eyes, avoid forming mist. Wash hands before breaks and at the end of the workday.

Storage
Keep in a dry, cool place (O - 30° C).

8. EXPOSURE CONTROLS / PERSONAL PROTECTION

Engineering measures to reduce exposure
Use local exhaust if misting occurs. Natural ventilation is adequate in absence of mists.

Personal protection equipment

Respiratory protection
In case of insufficient ventilation and/or misty conditions, wear NIOSH approved organic filter respirator.

Hand protection
Rubber gloves.

Eye protection
Safety glasses with side-shields. Splash-proof goggles if liquid contact is possible. Do not wear contact lenses.

Skin and body protection
Chemical resistant apron or protective suit if splashing or repeated contact with solution is likely.

Hygiene measures
Wash hands before breaks and at the end of workday. Handle in accordance with good industrial hygiene and safety practice

9. PHYSICAL AND CHEMICAL PROPERTIES

Form:	liquid
Color:	amber
pH:	3.0-10.0 @ 5 g/l for product series. See technical bulletin for specific value.
Flash point (°C) :	N/A
Vapor Pressure (mmHg) :	N/A
Bulk density :	See Technical bulletin
Water solubility :	Complete
Viscosity (mPa s) :	See Technical Bulletin.

10. STABILITY AND REACTIVITY

Stability : Product is stable, no hazardous polymerization will occur.

Materials to avoid : Strong oxidizing agents.

Hazardous decomposition products : May produce carbon dioxide and/orcarbon monoxide.

11. TOXICOLOGICAL INFORMATION

Irritation

- Skin : May cause irritation.

- Eyes : Irritating to eyes.

Sensitization : The product is not expected to be sensitizing.

12. ECOLOGICAL INFORMATION

Ecotoxicity

Ecological injuries are not known or expected under normal use.

Bioaccumulation

The product is not expected to bioaccumulate.

Persistence / degradability

No data available.

13. DISPOSAL CONSIDERATIONS

Waste from residues / unused products

Burn in an adequate incinerator or bury in landfill in accordance with all applicable regulations.

Contaminated packaging

Rinse empty containers with water and use the rinse water to prepare the working solution. Any disposal practice must be in compliance with all applicable regulations.

14. TRANSPORT INFORMATION

Not regulated by Department of Transportation.

15. REGULATORY INFORMATION

All components of this product are on TSCA and DSL inventories

RCRA status :	Not a hazardous waste.
Hazardous waste number :	Not applicable.
Reportable quantity (40 CFR 302) :	Not applicable.
Threshold planning quantity (40 CFR 355) :	Not applicable.
Toxic Chemical Release Reporting (40 CFR 302) :	Not applicable.

16. OTHER INFORMATION

This Material Safety Data Sheet, revised : 02/28/1996

The information provided in this Safety Data Sheet is correct to the best of our knowledge, information and belief at the date of its publication. The information given is designed only as a guidance for safe handling, use, processing, storage, transportation, disposal and release, and is not to be considered a warranty or quality specification. The information relates only to the specific material designated and may not be valid for such material used in combination with any other materials or in any process unless specified in the text.

724/728-1847
FAX: 724/728-3440

TECHNICAL DATA SHEET

NS 1100

APPEARANCE	CLEAR LIQUID
IONIC CHARACTER	ANIONIC
CHARGE DENSITY	HIGH
MOLECULAR WEIGHT	LOW
SPECIFIC GRAVITY	1.2
pH	3.2–4.0
BULK VISCOSITY (cps)	50-300
APPROX. VISCOSITY @ 5 G/L ACTIVE CONTENT (cps)	SIMILAR TO WATER
FREEZING POINT (°C)	0
STORAGE TEMPERATURE (°F)	10 - 35
SHELF LIFE (months)	6

The data in this Technical Data Sheet is provided for information only. It is correct to the best of our knowledge, information and belief at the date of its publication. It does not constitute a specification and no liability is assumed nor freedom from any existing patents.

P.O. Box 26 Neo Solutions, Inc. Beaver, PA 15009-0026

Attachment P-2

Security Fence Alignment Plan and Monthly Fence Inspection Form

In order to manage the size of this 100% design report, this attachment only is included in the electronic submittal. This attachment describes current Site O&M activities, and has not been revised for this submittal.

Note: This security fence alignment and inspection plan addresses inspection, monitoring, and maintenance activities for the existing security fencing and will be used until the existing security fencing is removed during the implementation of the remedial action. This attachment will be replaced in its entirety when the final perimeter security fencing around the new water treatment plant and wildlife friendly fencing around the cover systems is installed.

Attachment 2

The primary access to the Midnite Mine Site is through gates located on the East Haul road and the West Access road. Signs are posted on the gates that provide access contact information. Personnel entering the gates are required to close and/or lock the gates, as applicable, behind them.

The gate on the East Haul road is equipped with an automated mechanism for gate opening and closing. The automated mechanism is activated by Dawn Mining Company radios, which operate on Federal Communications Commission (FCC) license channels.

The West Access road gate is secured with a chain and padlock to prevent unauthorized access. The combination to an interlocking padlock has been provided to EPA, Tribal, and BIA representatives.

This Monthly Fence Inspection Form (attached) is to be used for the required monthly inspection of the Midnite Mine site security fence. The completed copies are to be bound together and filed at the Dawn Mill Site office.

MONTHLY FENCE INSPECTION
MIDNITE MINE

Date:_____ Inspector(s):_____

Summary of Findings:_____

_____

_____

_____

_____

Evidence of Wildlife:_____

_____

_____

_____

Gates Secure? Issues?_____

_____

_____

_____

_____

_____

Maintenance Needed:_____

_____

_____

_____

Maintenance Completed:_____

_____

_____

_____

_____

_____

Signature:_____

E:\181850\Task 4\F-PROGRESS-PLAN-AS-BUILT.dwg SAVED: 12/9/09 PRINTED: 5/4/10 BY: THOMAS.BOEHLER

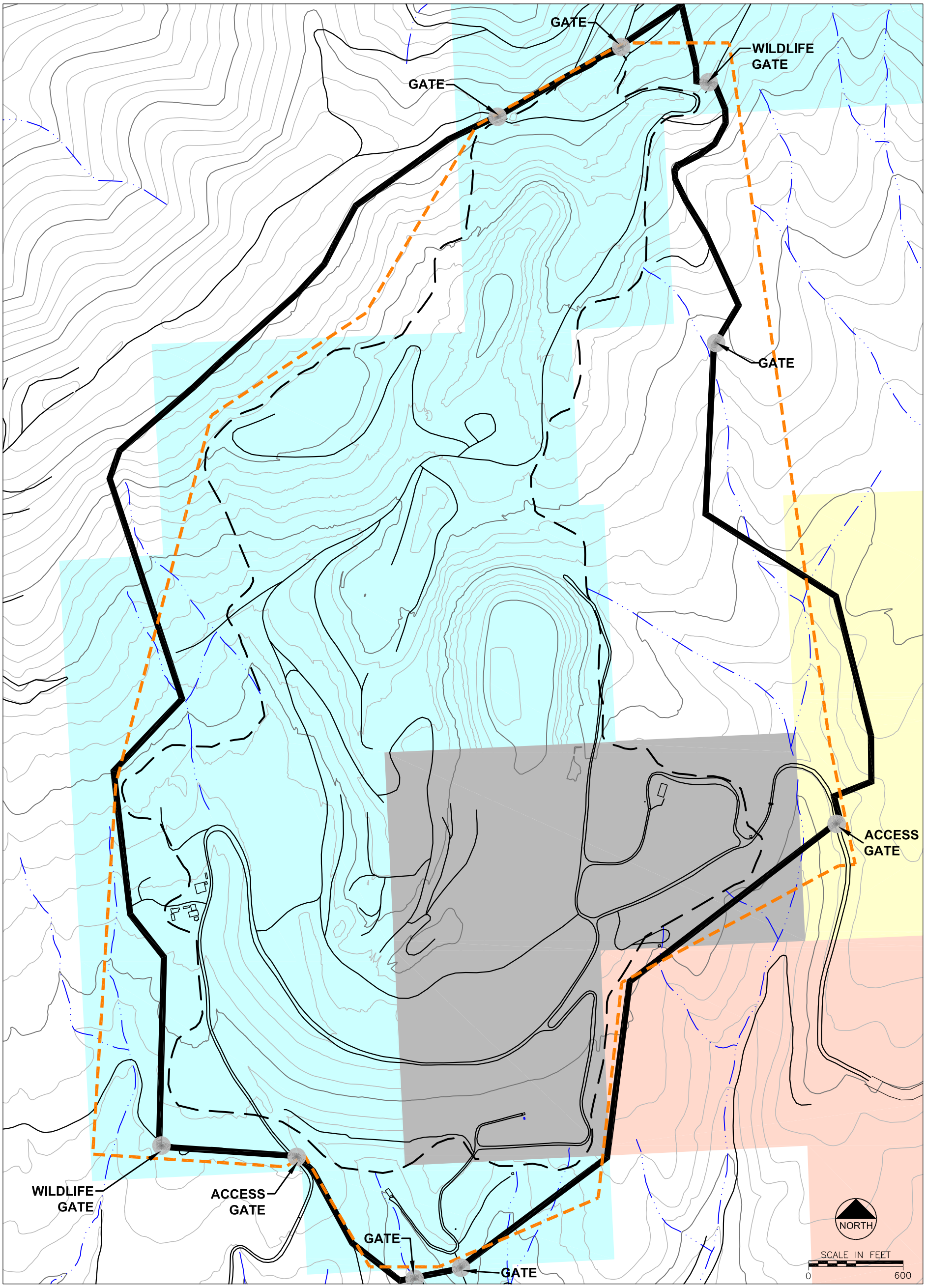

LEGEND

ROADS AND TRAILS	PROPOSED FENCE ALIGNMENT	ALLOTMENT NO. A320	TRIBAL LAND
BUILDINGS	AS-BUILT FENCE ALIGNMENT	ALLOTMENT NO. A317	
EXISTING NATURAL DRAINAGE	GATE LOCATION	TRIBAL LEASES	
MINED AREA BOUNDARY		BOYD LEASE	

Project No. 181850

August 2009

FIGURE 2-1
MIDNITE MINE
SECURITY FENCE ALIGNMENT PLAN AS-BUILT 8/5/09

Attachment P-3

Inspection and Maintenance of Site Access Roads and Culverts

In order to manage the size of this 100% design report, this attachment only is included in the electronic submittal. This attachment describes current Site O&M activities, and has not been revised for this submittal.

Note: The inspection and maintenance activities listed in this attachment will be used until the existing access roads and culverts are removed during the implementation of the remedial action. This attachment will be replaced in its entirety when the new final site access road is constructed.

Attachment 3

These inspection forms are to be used for the inspection of the Midnite Mine site access roads culverts, and sediment traps. These inspections are required to be performed quarterly or after major storm events. The completed copies are to be bound together and filed at the Dawn Mill Site office. A road inspection form should be filled out for every 500 feet of road and at critical locations (i.e. existence of flow diversion berms, steep cut or fill slopes, or sharp corners).

CULVERT INSPECTION FORM*
MIDNITE MINE

Date:_____ Inspector:_____

Culvert Number (see attached Index Map):_____

Culvert Condition (rust, holes, structural integrity, etc): ☐Poor ☐ Fair ☐ Good

Comments:_____

_____

_____

Inlet Condition: ☐Poor ☐ Fair ☐ Good

Comments:_____

_____

_____

Outlet Condition: ☐Poor ☐ Fair ☐ Good

Comments:_____

_____

_____

Stream Condition (stable, eroding, vegetated, etc.): ☐Poor ☐ Fair ☐ Good

Embankment Conditions (eroding, rilling, vegetation, seeps, etc.): ☐Poor ☐ Fair ☐ Good

Highwater marks?

Misalign channel? ☐ Yes ☐ No

Sediment accumulation (depth?):

Photo Log (photos with legend attached)

Photo Number and Subject: _____

Photo Location: _____

Direction Photo Taken (looking upstream/downstream, north or south, etc) _____

_____

*Quarterly Inspection or Following Major Storm Event Required

E:\181850-2010-Survey\Task 400\OMMP\CULVERT MAP.dwg SAVED:12/22/10 PRINTED:12/30/10 BY: THOMAS.BOEHLER

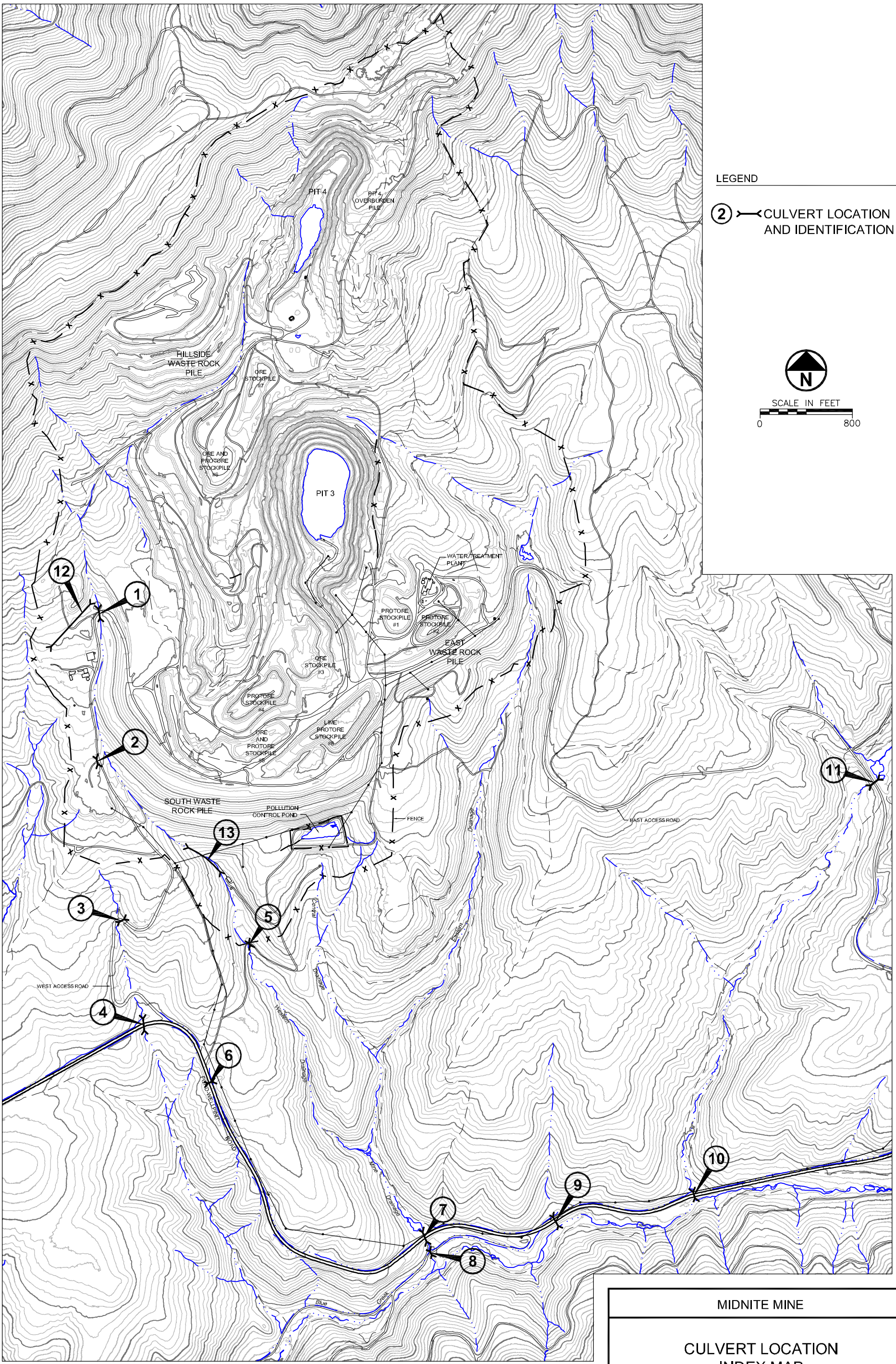

MIDNITE MINE

CULVERT LOCATION INDEX MAP

PROJECT:	181850
DATE:	DECEMBER 2010
FILE:	CULVERT MAP.DWG

TETRA TECH

ROAD INSPECTION FORM*
MIDNITE MINE

Date:_____ Inspector:_____

Road:_____ Chainage:_____
(distance from Wellpinit Road)

Road Surface

Surface Description:

West Haul Road
☐ Good ☐ Fair ☐ Poor

East Haul Road
☐ Good ☐ Fair ☐ Poor

Comments (rutting, wheel tracks, wash boarding, rilling, soft spots, potholes, dust):_____

_____

_____

_____

Is road surface smooth or firm? ☐ Yes ☐ No

Is erosion evident on the road surface? ☐ Yes ☐ No

Is there visible dust when a vehicle passes at normal speed? ☐ Yes ☐ No

Does the road drain properly? ☐ Yes ☐ No

Are road sediments being transported to natural drainage? ☐ Yes ☐ No

Describe Drainage Conditions:_____

_____

Roadside Ditches

Is there evidence of erosion in the ditch? ☐ Yes ☐ No

Do sediment traps exist in the ditch? ☐ Yes ☐ No

Are sediment traps working properly? ☐ Yes ☐ No

Has the cutslope been undercut or deposited sediment in the ditch? ☐ Yes ☐ No

ROAD INSPECTION FORM CONTINUED*
MIDNITE MINE

Flow Diversion Berms

Location Description of Flow Diversion Berm: _____

What is the condition of the flow diversion berm? _____

Is the flow diversion berm in need of repair? ☐ Yes ☐ No

Describe repair and if repair was performed and when: _____

Cut/Fill Slope Conditions

Cutslope Height (ft): _____

Slope Ratio (1:1)? _____

Material ☐ Rock ☐ Soil ☐ Vegetation ☐ Other

Are seeps present? ☐ Yes ☐ No

Is the cutslope stable? ☐ Yes ☐ No Eroding? ☐ Yes ☐ No

Fill Slope Ratio (2:1) _____

Is the fill slope stable? ☐ Yes ☐ No Eroding? ☐ Yes ☐ No

Photo Log (photos with legend attached)

Photo Number and Subject: _____

Photo Location: _____

Direction Photo Taken (looking upstream/downstream, north or south, etc) _____

_____

*Quarterly Inspection or Following Major Storm Event Required

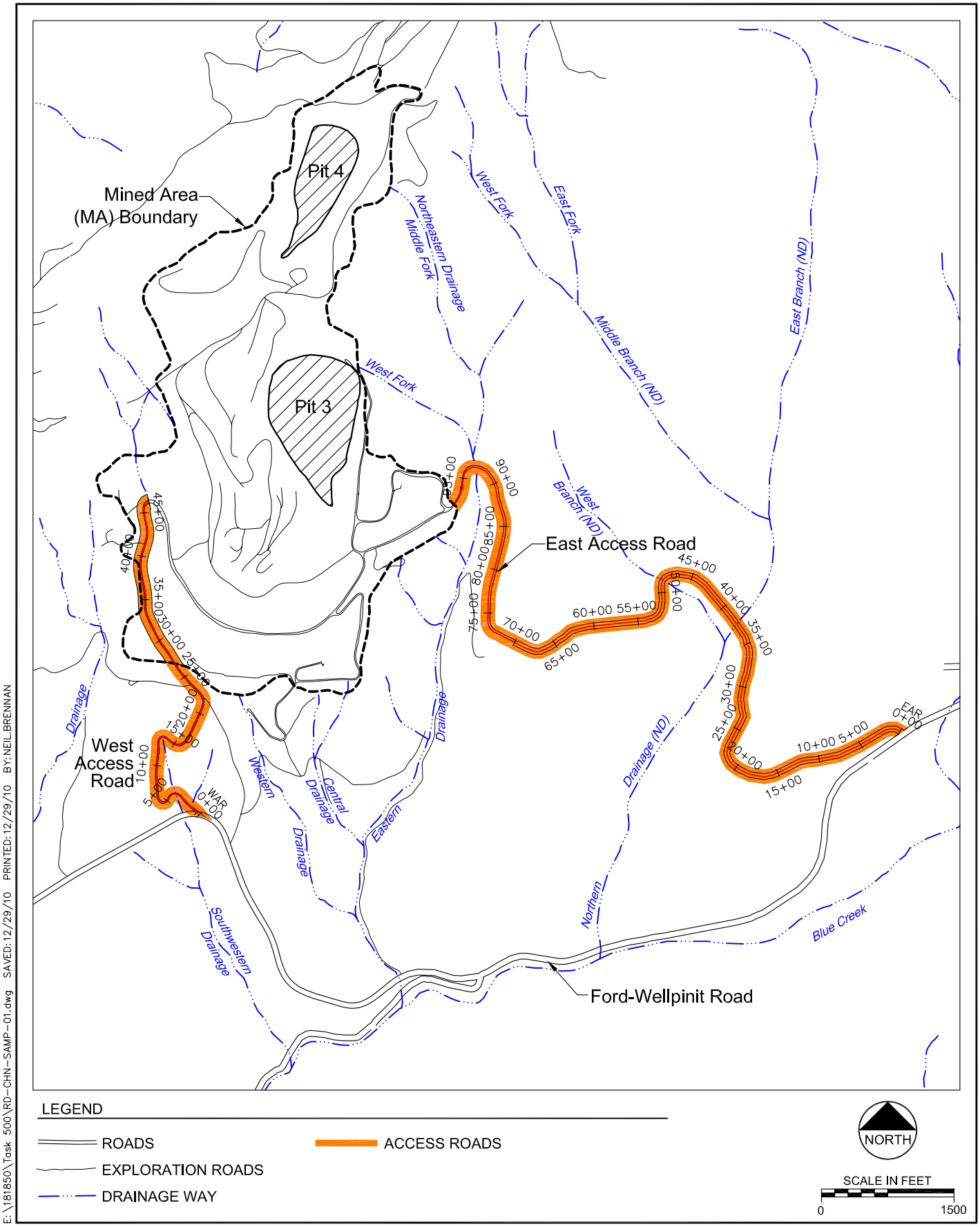

E:\181850\Task 500\RD-CHN-SAMP-01.dwg SAVED:12/29/10 PRINTED:12/29/10 BY:NEIL.BRENNAN

Project No. 181850/Task 504

June 2010

ACCESS ROAD INDEX MAP

SEDIMENT TRAP INSPECTION FORM*
MIDNITE MINE

Inspector's Name:_____ Date:_____ Time:_____

Sediment Trap Number (see Location Index Map):_____

Location Description:_____

_____

Weather Conditions:_____

Date of Last Precipitation: _____

Score the following on a 1 to 5 scale
1 = poor condition (significant problems) 5 = excellent condition (no problem)

Accumulation of Debris/Sediment	1	2	3	4	5
Vegetation Conditions	1	2	3	4	5
Bank Erosion/Breach	1	2	3	4	5
Side Slope Erosion	1	2	3	4	5
Spillway Condition	1	2	3	4	5
Downstream of Spillway Condition	1	2	3	4	5
Other _____	1	2	3	4	5

Inspection Summary (explain if maintenance is needed and to what extent, attached sketches if necessary)

_____

_____

_____

_____

_____

Photo Log (photos with legend attached)

Photo Number and Subject: _____

Photo Location: _____

Direction Photo Taken (looking upstream/downstream, north or south, etc) _____

_____

*Quarterly inspection and following major storm events is required

E:\181850-2010-Survey\Task 400\OMMP\SEDIMENT TRAP MAP.dwg SAVED:12/22/10 PRINTED:12/29/10 BY:NEIL.BRENNAN

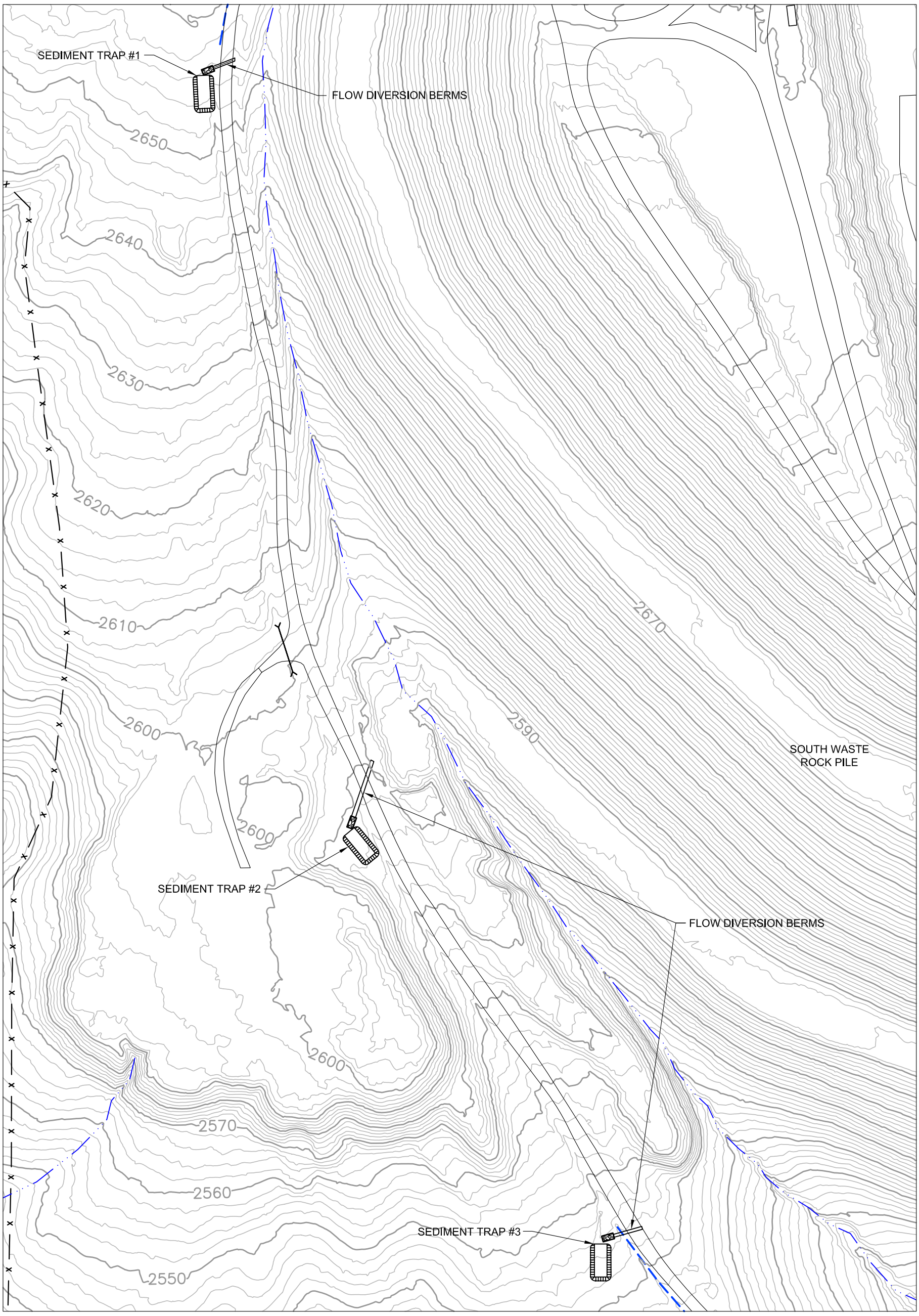

NORTH

SCALE IN FEET

0 100'

MIDNITE MINE

SEDIMENT TRAP
LOCATION INDEX MAP

PROJECT:	181850
DATE:	DECEMBER 2010
FILE:	SEDIMENT TRAP MAP.DWG

TETRA TECH

Attachment P-4

Routine Inspection and Maintenance for the Surface Water Diversions

In order to manage the size of this 100% design report, this attachment only is included in the electronic submittal. This attachment describes current Site O&M activities, and has not been revised for this submittal.

Note: The inspection and maintenance activities listed in this attachment will be used until the existing surface water diversion facilities are removed during the implementation of the remedial action. This attachment will be replaced in the final design documents to address new inspection and maintenance requirements associated with the final surface water control facilities.

Attachment 4

These inspection forms are to be used for the required inspections of the diversion channels and rock check dams. These inspections are required to be performed quarterly or after major storm events. The completed copies are to be bound together and filed at the Dawn Mill Site office.

DIVERSION CHANNEL INSPECTION FORM*
MIDNITE MINE

Inspectors Name:_____ Date:_____ Time:_____

Diversion Channel Number (see Location Index Map):_____

Location Description:_____

_____

Weather Conditions:_____

Date of Last Precipitation: _____ Approximate Amount (inches):_____

Type of Channel (circle one): Grass-lined Riprap-lined Bare Soil Other

Score the following on a 1 to 5 scale
1 = poor condition (significant problems) 5 = excellent condition (no problem)

Uniform Channel Shape	1	2	3	4	5
Accumulation of Debris/Sediment	1	2	3	4	5
Accumulation of Vegetation	1	2	3	4	5
Bank Erosion/Breach	1	2	3	4	5
Side Slope Erosion	1	2	3	4	5
Upland Debris/Sediment Accumulation	1	2	3	4	5
Upland Erosion	1	2	3	4	5
Other _____	1	2	3	4	5

Inspection Summary (explain if maintenance is needed and to what extent, attached sketches if necessary)

_____

_____

_____

_____

_____

Photo Log (photos with legend attached)

Photo Number and Subject: _____

Photo Location: _____

Direction Photo Taken (looking upstream/downstream, north or south, etc) _____

_____

*Quarterly Inspection or Following Major Storm Event Required

E:\181850-2010-Survey\Task 400\OMMP\DIVERSION MAP.dwg SAVED:12/22/10 PRINTED:12/30/10 BY: THOMAS.BOEHLER

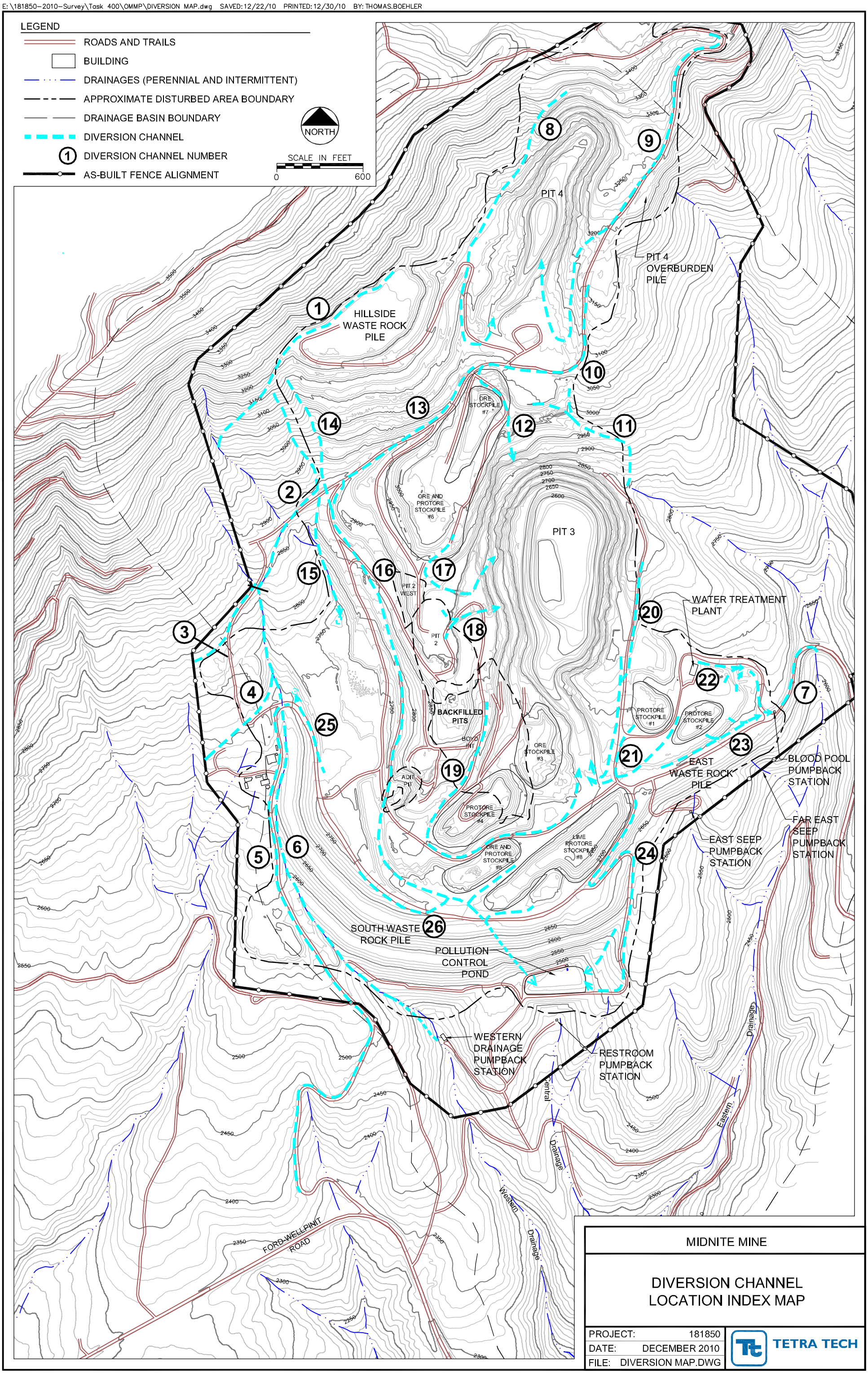

MIDNITE MINE

DIVERSION CHANNEL LOCATION INDEX MAP

PROJECT:	181850
DATE:	DECEMBER 2010
FILE:	DIVERSION MAP.DWG

TETRA TECH

ROCK CHECK DAM INSPECTION FORM*
MIDNITE MINE

Inspector's Name:_____ Date:_____ Time:_____

Rock Check Dam Number (see Location Index Map):_____

Location Description:_____

_____

Weather Conditions:_____

Date of Last Precipitation: _____

Score the following on a 1 to 5 scale
1 = poor condition (significant problems) 5 = excellent condition (no problem)

Accumulation of Debris/Sediment	1	2	3	4	5
Condition of Rock	1	2	3	4	5
Spillway Condition	1	2	3	4	5
Evident of Breaching or Flanking	1	2	3	4	5
Condition of underlying fabric	1	2	3	4	5
Other _____	1	2	3	4	5

Inspection Summary (explain if maintenance is needed and to what extent, attached sketches if necessary)

_____

_____

_____

_____

_____

Photo Log (photos with legend attached)

Photo Number and Subject: _____

Photo Location: _____

Direction Photo Taken (looking upstream/downstream, north or south, etc) _____

_____

*Quarterly inspection and following major storm events is required

E:\181850\Task 4\InterimDesign\AS-BUILT\Int-Mech-Design-rock check dam.dwg SAVED: 12/28/10 PRINTED: 12/30/10 BY: THOMAS.BOEHLER

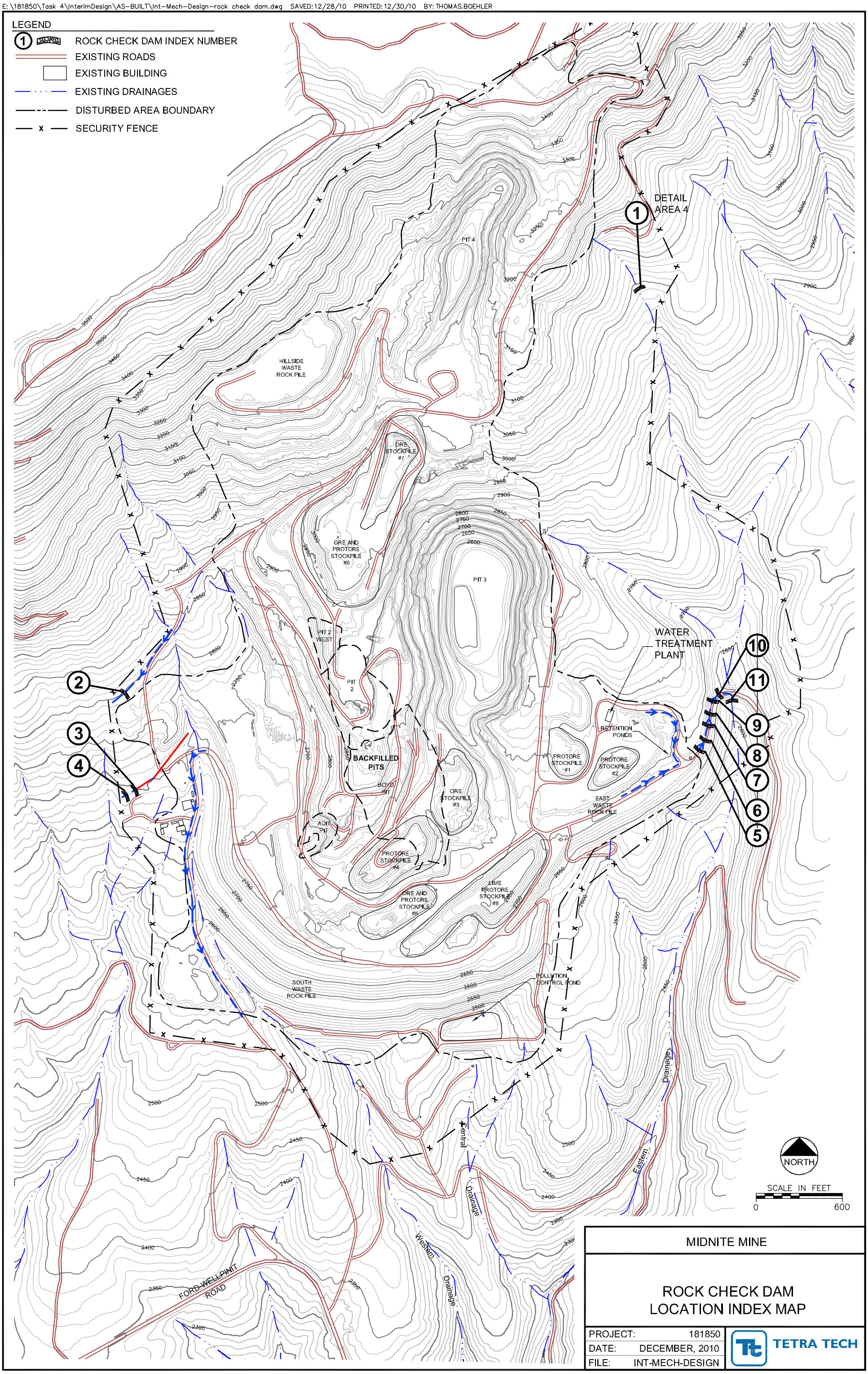

MIDNITE MINE

ROCK CHECK DAM
LOCATION INDEX MAP

PROJECT:	181850
DATE:	DECEMBER, 2010
FILE:	INT-MECH-DESIGN

TETRA TECH

Attachment P-5

Routine Inspection and Maintenance for the Alluvial Groundwater Collection System

In order to manage the size of this 100% design report, this attachment only is included in the electronic submittal. This attachment describes current Site O&M activities, and has not been revised for this submittal.

Note: The inspection and maintenance activities listed in this attachment will be used until the existing groundwater collection systems in the Far East, Central, and Western Drainages are removed during the implementation of the remedial action. This attachment will be replaced in its entirety when the final groundwater controls are installed at the site.

Alluvial Groundwater Collection System

Prepared for:

Dawn Mining Company

P.O. Box 250
Ford, Washington 99013

and

Newmont USA Limited

6363 S. Fiddler's Green Circle
Greenwood Village, Colorado 80111

Prepared by:

Tetra Tech

3801 Automation Way, Suite 100
Fort Collins, Colorado 80525
(970) 223-9600
Fax (970) 223-7171
Tetra Tech Project No. 114-181850

December 30, 2010

TABLE OF CONTENTS

1.0 INTRODUCTION 1

2.0 DESCRIPTION, OPERATION AND CONTROL OF ALLUVIAL GROUNDWATER COLLECTION SYSTEM 2

2.1 Alluvial Groundwater Collection System 2

2.1.1 Alluvial Groundwater Collection System for the Central Drainage 2

2.1.2 Alluvial Groundwater Collection System for the Western Drainage 3

2.1.3 Alluvial Groundwater Collection System for the Far East Seep 4

3.0 TROUBLESHOOTING AND COMMON OPERATING PROBLEMS FOR ALLUVIAL GROUNDWATER WELLS 6

3.1.1 Common Operating Problems for Central Drainage Alluvial Wells 6

3.1.2 Common Operating Problems for Western Drainage Alluvial Wells..... 6

3.1.3 Common Operating Problems for Far East Seep Alluvial Well 7

4.0 PERSONNEL..... 8

5.0 ALLUVIAL GROUNDWATER PUMPING MONITORING AND STANDARDS..... 9

5.1 Purpose..... 9

6.0 ANNUAL OPERATION AND MAINTENANCE COSTS..... 10

7.0 MAINTENANCE 11

7.1 General 11

8.0 EMERGENCY OPERATING AND RESPONSE PROGRAM 12

9.0 SITE SAFETY..... 13

10.0 UTILITIES 14

11.0 REFERENCES 15

LIST OF FIGURES

Figure 1 Central Drainage Alluvial Groundwater Wells
Figure 2 Western Drainage Alluvial Groundwater Wells
Figure 3 Far East Seep Drainage Alluvial Groundwater Well

LIST OF APPENDICES

Appendix A: General Operating and Equipment Criteria
Appendix B: Alluvial Groundwater Discharge Data Sheets
Appendix C: Manufacturer's Operations and Maintenance Manuals

1.0 INTRODUCTION

This Plan describes the operation, maintenance and monitoring of the alluvial groundwater wells (PBC-01, PBC-02, PBC-03, PBW-01, and PBW-02) installed in 2010 as part of the Interim Mechanism (IM) Work at the Midnite Mine. These groundwater wells were installed in the Central and Western Drainages. An existing well (MWED-05) near the Far East Seep will also be pumped as part of the IM Work. Groundwater pumped from these alluvial wells will be discharged into the existing water collection system at the Midnite Mine which includes the water collection systems at the Water Treatment Plant (WTP). All background operations related to this OM&M Plan can be found in Attachment 1: Operation, Maintenance and Monitoring (OM&M) Plan for the Midnite Mine Water Collection System and Water Treatment Plant for the Phase I RD/RA: Interim Water Management for the Midnite Mine.

2.0 DESCRIPTION, OPERATION AND CONTROL OF ALLUVIAL GROUNDWATER COLLECTION SYSTEM

The alluvial groundwater collection systems are described in this section and include overall process descriptions, process controls, major components, start-up procedures, and normal, alternate, and emergency operations. The systems which are described in the section include the following:

- Central Drainage Alluvial Groundwater Wells
- Western Drainage Alluvial Groundwater Wells
- Far East Seep Alluvial Groundwater Well

2.1 Alluvial Groundwater Collection System

This alluvial groundwater collection system was designed and implemented to extract alluvial groundwater and convey to the water treatment plant.

Figure 1 presents the Central Drainage alluvial well locations, Figure 2 presents the Western Drainage well locations, and Figure 3 presents the Far East Seep well locations. Alluvial groundwater collected in the Central Drainage is pumped to the Restroom Pumpback Station, alluvial groundwater collected in the Western Drainage is pumped to the Western Drainage Pumpback Station, and alluvial groundwater collected at the Far East Seep is pumped to the Far East Seep Pump Station. Water collected in the Western Drainage Pump Station and Restroom Pumpback Station is pumped to the Pollution Control Pond (PCP). Water from combined sources collected in the PCP is then pumped to Pit 3. During the very limited portion of the year when water flows into the Far East Seep system, the water collected at the Far East Seep Pump Station is pumped to the East Seep Pump Station and then to Pit 3. Higher flows collected during this period are pumped to the Blood Pool Pump Station and then to Pit 3. Both of these pump stations operate only during high flow periods, typically during snowmelt.

2.1.1 Alluvial Groundwater Collection System for the Central Drainage

Three pumping wells (PBC-01, PBC-02, and PBC-03) and three monitoring wells (MWCD-02, MW-02, and MWED-01) are located in the Central Drainage (Figure 1). The pumping wells have electric submersible pumps which pump groundwater to the Restroom Pumpback Station.

2.1.1.1 Control

The Central Drainage Alluvial Groundwater Well system consists of three separate wells each with pump, pump power supply, flow meter, and flow analyzer that convey groundwater to the Restroom Pumpback Station. The submersible pumps run continuously and there are no pump controls.

2.1.1.2 Major Components

- Electric submersible pumps (3)
- Pump power supply (3)
- Flow meter (3)
- Flow analyzer (3)

See Appendix A for more detailed information on pumps, instrumentation, and power.

2.1.1.3 Laboratory or Onsite Testing Controls

There are no laboratory or onsite testing controls associated with this system.

2.1.1.4 Start Up

This system runs continuously. Therefore, a specific start up procedure is not applicable to this system.

2.1.1.5 Normal Operation

The alluvial pumping wells will be checked approximately once a week. During periods of increased runoff and/or rapidly increasing water levels the alluvial wells may be checked more frequently. The checks will consist of:

1. Verify that there is discharge to the pumpback station from each well's piping.
2. Verify that the flow meters and flow analyzers are operational and record the instantaneous discharge, totalizing discharge, and time of observation for each well.
3. Measure each well's discharge with a calibrated container and a stop watch.
4. Compare the measured flow to the flow analyzer's instantaneous discharge.
5. All data will be recorded on a Central Drainage Alluvial Groundwater Discharge Data Sheet (Appendix B).

2.1.1.6 Alternate Operation

If the flow meter/flow analyzer malfunctions and is sent to the manufacturer for repair/calibration, it will be removed from the discharge line and replaced with an appropriately sized pipe. Normally scheduled manual discharge measurements (calibrated container and stopwatch) will be used to document discharge until the flow meter/flow analyzer is returned to service.

2.1.1.7 Emergency Operation and Failsafe Features

There are no emergency operations associated with the alluvial well system.

2.1.2 Alluvial Groundwater Collection System for the Western Drainage

Two pumping wells (PBW-01and PBW-02) and three monitoring wells (MWWD-01, MWWD-02, and MW-1) are located in the Western Drainage (Figure 2). The pumping wells have electric submersible pumps which pump groundwater to the Western Drainage Pumpback Station.

2.1.2.1 Control

The Western Drainage Alluvial Groundwater Well system consists of two separate wells, each with pump, pump power supply, flow meter, and flow analyzer that convey groundwater to the Western Drainage Pumpback Station. The submersible pumps run continuously and there are no pump controls.

2.1.2.2 Major Components

- Electric submersible pumps (2)
- Pump power supply (2)
- Flow meter (2)
- Flow analyzer (2)

See Appendix A for more detailed information on pumps, instrumentation, and power.

2.1.2.3 Laboratory or Onsite Testing Controls

There are no laboratory or onsite testing controls associated with this system.

2.1.2.4 Start Up

This system runs continuously. Therefore, a specific start up procedure is not applicable to this system.

2.1.2.5 Normal Operation

The alluvial pumping wells will be checked approximately once a week. During periods of increased runoff and/or rapidly increasing water levels the alluvial wells may be checked more frequently. The checks will consist of:

1. Verify that there is discharge to the pumpback station from each well's piping.
2. Verify that the flow meters and flow analyzers are operational and record the instantaneous discharge, totalizing discharge, and time of observation for each well.
3. Measure each well's discharge with a calibrated container and a stop watch.
4. Compare the measured flow to the flow analyzer's instantaneous discharge.
5. All data will be recorded on a Western Drainage Alluvial Groundwater Discharge Data Sheet (Appendix B).

2.1.2.6 Alternate Operation

If the flow meter/flow analyzer malfunctions and is sent to the manufacturer for repair/calibration, it will be removed from the discharge line and replaced with an appropriately sized pipe. Normally scheduled manual discharge measurements (calibrated container and stopwatch) will be used to document discharge until the flow meter/flow analyzer is returned to service.

2.1.2.7 Emergency Operation and Failsafe Features

There are no emergency operations associated with the alluvial well system.

2.1.3 Alluvial Groundwater Collection System for the Far East Seep

One pumping well (MWED-05) is located at the Far East Seep (Figure 3). The pumping well has an electric submersible pump which pumps groundwater to the Far East Seep Pumpback Station.

2.1.3.1 Control

The Far East Seep Alluvial Groundwater Well system consists of one well with pump, pump power supply, pump controller, flow meter, and flow analyzer that convey groundwater to the Far East Seep Pumpback Station. The submersible pump has a controller that turns the pump on and off. The controller turns the pump on when the water level reaches the high water level sensor and turns the pump off when the water level reaches the low water level sensor.

2.1.3.2 Major Components

- Electric submersible pumps (1)
- Pump controller
- Pump power supply (1)
- Flow meter (1)
- Flow analyzer (1)

See Appendix A for more detailed information on pumps, instrumentation, and power.

2.1.3.3 Laboratory or Onsite Testing Controls

There are no laboratory or onsite testing controls associated with this system.

2.1.3.4 Start Up

This system is on continuously. Therefore, a specific start up procedure is not applicable to this system.

2.1.3.5 Normal Operation

The alluvial pumping wells will be checked approximately once a week. During periods of increased runoff and/or rapidly increasing water levels, the alluvial wells may be checked more frequently. The checks will consist of:

1. Verify that there is discharge to the pumpback station from the well's piping. The pump may not operate due to the Abyss controller if the water level in the well is not high enough. Compare the measured water level to the depth of the pump on sensor to verify if the pump should be running.
2. Verify that the flow meter and flow analyzer are operational and record the instantaneous discharge, totalizing discharge, and time for the well.
3. Measure the well's discharge with a calibrated container and a stop watch.
4. Compare the measured flow to the flow analyzer's instantaneous discharge.
5. All data will be recorded on the Far East Seep Alluvial Groundwater Discharge Data Sheet (Appendix B).

2.1.3.6 Alternate Operation

If the flow meter/flow analyzer malfunctions and is sent to the manufacturer for repair/calibration, it will be removed from the discharge line and replaced with an appropriately sized pipe. Normally scheduled manual discharge measurements (calibrated container and stopwatch) will be used to document discharge until the flow meter/flow analyzer is returned to service.

2.1.3.7 Emergency Operation and Failsafe Features

There are no emergency operations associated with the alluvial well system.

3.0 TROUBLESHOOTING AND COMMON OPERATING PROBLEMS FOR ALLUVIAL GROUNDWATER WELLS

The alluvial groundwater collection system's most common operating problems are detailed in this section.

3.1.1 Common Operating Problems for Central Drainage Alluvial Wells

1. Description of Problem: Lack of discharge.

   Probable Causes and Control Techniques

   A. Check that there is power (120 volts) to the power supply and power (12 volts) to the pump using a volt/ohm meter. Remedy: If there is power (120-volts) into the power supply but not to the pump replace the power supply.

   B. There is power to the pump but the pump does not run. Remedy: Repair or replace the submersible pump.

2. Description of Problem: The flow meter/flow analyzer does not function.

   A. Check that there is power to the flow meter/flow analyzer. Remedy: Connect to power.

   B. There is power to the flow meter/flow analyzer but it does not function. Remedy: Refer to manufacturer's manual for troubleshooting.

3. Description of Problem: The difference between the measured discharge and the flow analyzer discharge is more than 25%. Remedy: Refer to manufacturer's manual for troubleshooting.

3.1.2 Common Operating Problems for Western Drainage Alluvial Wells

1. Description of Problem: Lack of discharge.

   Probable Causes and Control Techniques

   A. Check that there is power (120 volts) to the power supply and power (12 volts) to the pump using a volt/ohm meter. Remedy: If there is power (120-volts) into the power supply but not to the pump replace the power supply.

   B. There is power to the pump but the pump does not run. Remedy: Repair or replace the submersible pump.

2. Description of Problem: The flow meter/flow analyzer does not function.

   A. Check that there is power to the flow meter/flow analyzer. Remedy: Connect to power.

   B. There is power to the flow meter/flow analyzer but it does not function. Remedy: Refer to manufacturer's manual for troubleshooting.

3. Description of problem: The difference between the measured discharge and the flow analyzer discharge is more than 25%. Remedy: Refer to manufacturer's manual for troubleshooting.

3.1.3 Common Operating Problems for Far East Seep Alluvial Well

1. Description of Problem: Lack of discharge.

   Probable Causes and Control Techniques

   A. Check that there is power (120 volts) to the power supply and power (12 volts) to the pump controller using a volt/ohm meter. Remedy: If there is power (120-volts) into the power supply but not to the pump controller replace the power supply.

   B. There is power to the pump controller but no power to the pump. Remedy: The pump may not operate due to the Abyss controller if the water level in the well is not high enough to contact the high water level sensor. Compare the measured water level to the depth of the pump on sensor to verify if the pump should be running.

   C. The water level is between the two sensors but total discharge readings or other observations indicate that the pump may not be operational. Remedy: Lower the high water sensor down to the water and verify that there is then power to the pump and the pump runs.

   D. Refer to manufacturer's manual for troubleshooting.

   E. There is power to the pump but the pump does not run. Remedy: Repair or replace the submersible pump.

2. Description of Problem: The flow meter/flow analyzer does not function.

   A. Check that there is power to the flow meter/flow analyzer. Remedy: Connect to power.

   B. There is power to the flow meter/flow analyzer but it does not function. Remedy: Refer to manufacturer's manual for troubleshooting.

3. Description of Problem: The difference between the measured discharge and the flow analyzer discharge is more than 25%. Remedy: Refer to manufacturer's manual for troubleshooting.

4.0 PERSONNEL

All background operations can be found in Attachment 1: Operation, Maintenance and Monitoring (OM&M) Plan for the Midnite Mine Water Collection System and Water Treatment Plant for the Phase I RD/RA: Interim Water Management for the Midnite Mine.

5.0 ALLUVIAL GROUNDWATER PUMPING MONITORING AND STANDARDS

5.1 Purpose

There is not a laboratory testing program associated with the alluvial groundwater wells. The operations of the alluvial pumping wells will be checked approximately once a week (see Section 2.1.1.5). During periods of increased runoff and/or rapidly increasing water levels, the operations alluvial wells may be checked more frequently. All data will be recorded on Alluvial Groundwater Discharge Data Sheets (Appendix B).

All records and reporting operations can be found in Attachment 1: Operation, Maintenance and Monitoring (OM&M) Plan for the Midnite Mine Water Collection System and Water Treatment Plant for the Phase I RD/RA: Interim Water Management for the Midnite Mine.

6.0 ANNUAL OPERATION AND MAINTENANCE COSTS

The annual operation and maintenance costs for the Midnite Mine Water Treatment Plant Facility are summarized in Attachment 1: Operation, Maintenance and Monitoring (OM&M) Plan for the Midnite Mine Water Collection System and Water Treatment Plant for the Phase I RD/RA: Interim Water Management for the Midnite Mine.

7.0 MAINTENANCE

7.1 General

There is not a formal maintenance program for the alluvial groundwater well system. Pumps, controllers, power supplies, flow meter/flow analyzer will be replaced/repaired as needed. The flow meter/flow analyzer manufacturer recommends a yearly factory calibration.

Manufacturer's maintenance manuals are generally the best guide for preventative maintenance instructions. These manuals are included in Appendix C, and the maintenance procedures shall be followed, as applicable.

8.0 EMERGENCY OPERATING AND RESPONSE PROGRAM

The purpose of this section is to provide a response program for the operators in the case of an emergency situation during the operation of the Midnite Mine Water Treatment Plant (WTP). All background operations can be found in Attachment 1: Operation, Maintenance and Monitoring (OM&M) Plan for the Midnite Mine Water Collection System and Water Treatment Plant for the Phase I RD/RA: Interim Water Management for the Midnite Mine.

9.0 SITE SAFETY

A complete discussion of health and safety for the WTP is included in the *Health and Safety Plan for the Phase I RD/RA: Interim Water Management for the Midnite Mine.* This document shall be kept onsite at the WTP with this OM&M Manual.

10.0 UTILITIES

The purpose of the utilities systems at the Midnite Mine WTP is to provide service to the various motors, instruments and components and to provide communication service. All background operations can be found in Attachment 1 Operation, Maintenance and Monitoring (OM&M) Plan for the Midnite Mine Water Collection System and Water Treatment Plant for the Phase I RD/RA: Interim Water Management for the Midnite Mine.

11.0 REFERENCES

U.S. Environmental Protection Agency (EPA), 2008b. Statement of Work for Phase I RD/RA: Interim Water Management for the Midnite Mine Superfund Site, Spokane Indian Reservation, Washington. November 7.

FIGURES

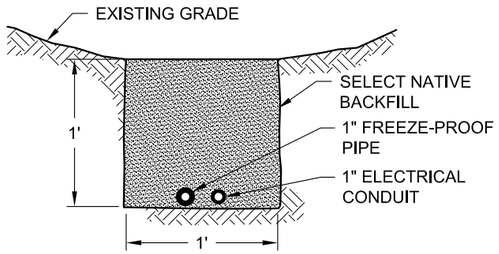

1-FT TRENCH DETAIL

NOT TO SCALE

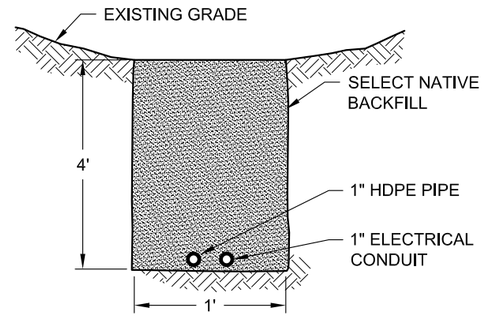

4-FT TRENCH DETAIL

NOT TO SCALE

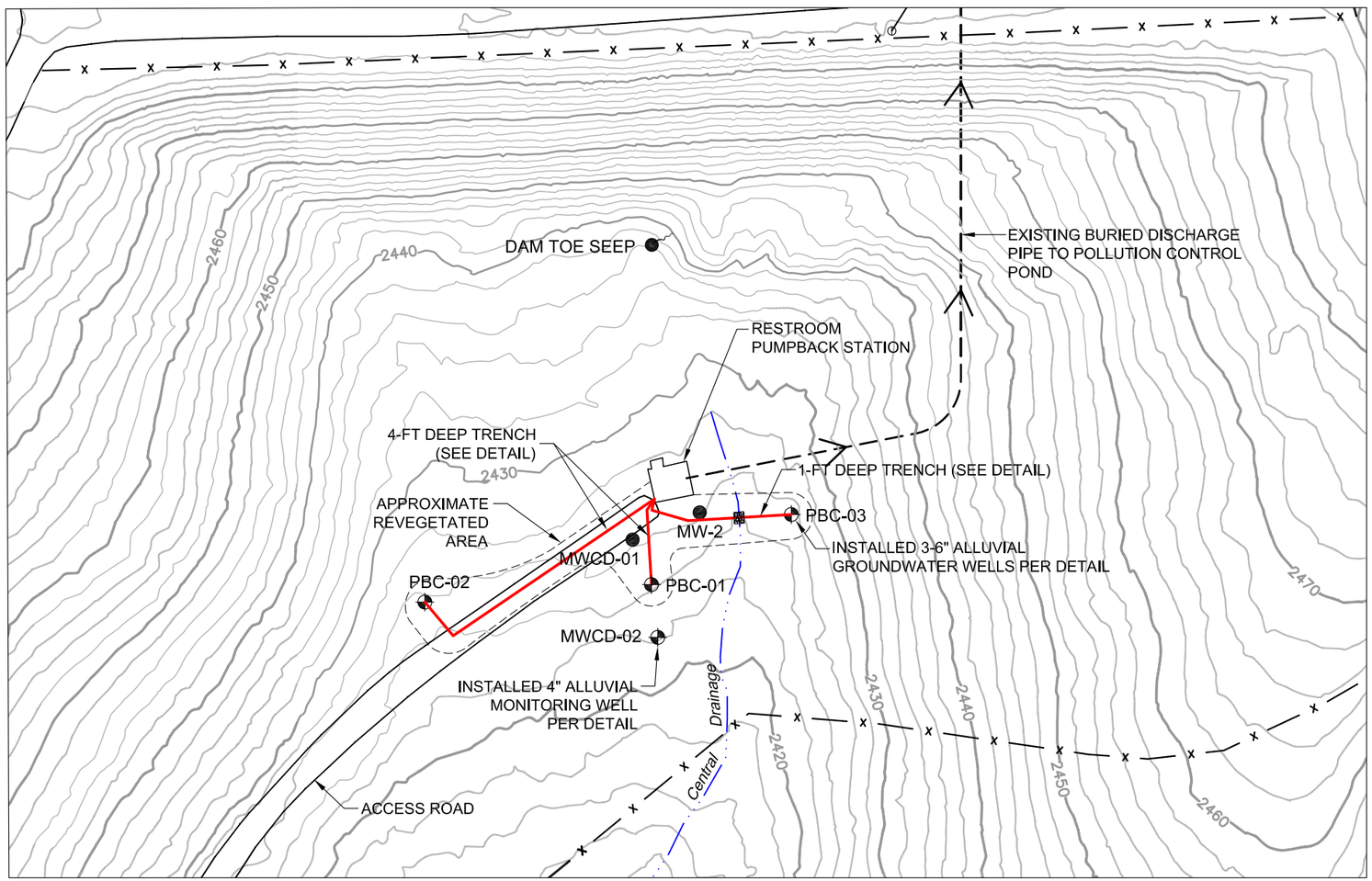

ALLUVIAL GROUNDWATER WELLS
CENTRAL DRAINAGE

SCALE: 1" = 50'

NORTH

SCALE IN FEET
0 50

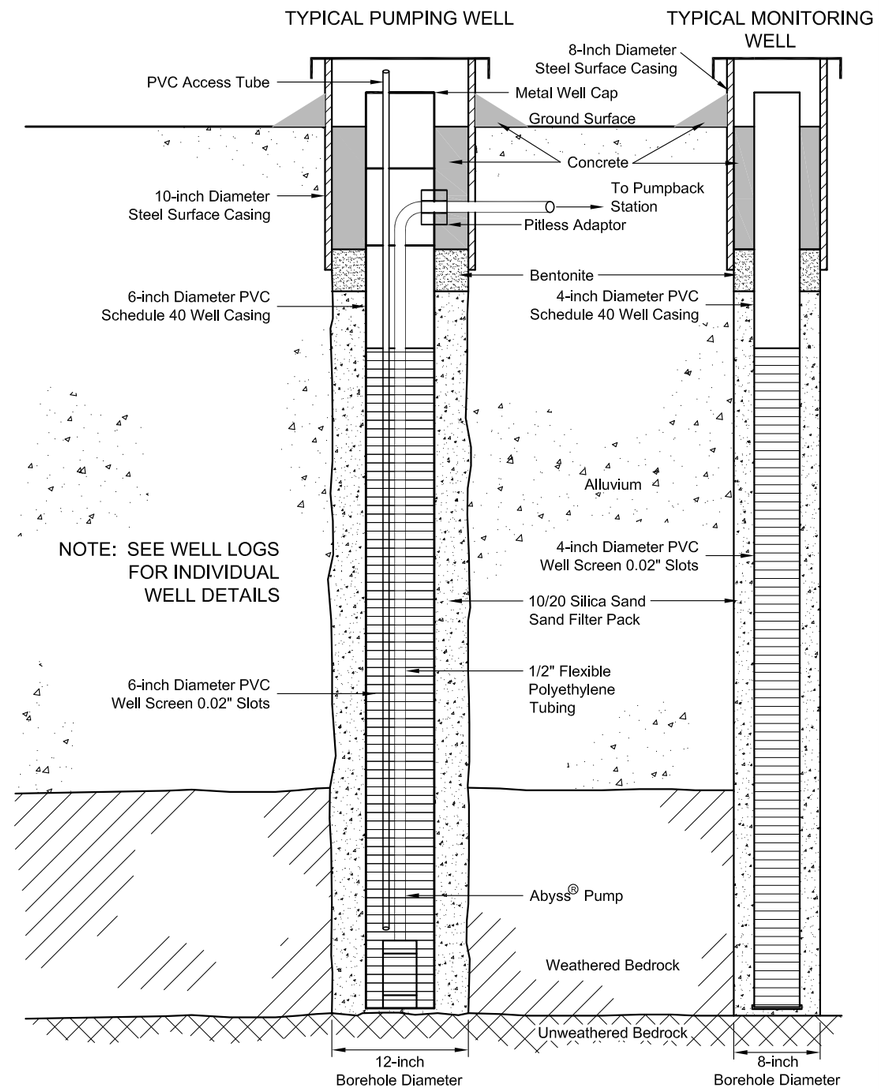

NOT TO SCALE

NOTE: SEE WELL LOG DETAILS FOR INDIVIDUAL WELL SPECIFICATIONS

REVISION	DESCRIPTION	DATE
0	AS-BUILT	12/20/10

MIDNITE MINE

FIGURE 1
CENTRAL DRAINAGE
ALLUVIAL GROUNDWATER WELLS

PROJECT: 181850
DATE: DECEMBER, 2010
FILE: INT-MECH-WD-CD

TETRA TECH

E:\181850\Task 4\InterimDesign\AS-BUILT\FIGURE 1.dwg SAVED:12/20/10 PRINTED:12/20/10 BY:TONY.DAVIS

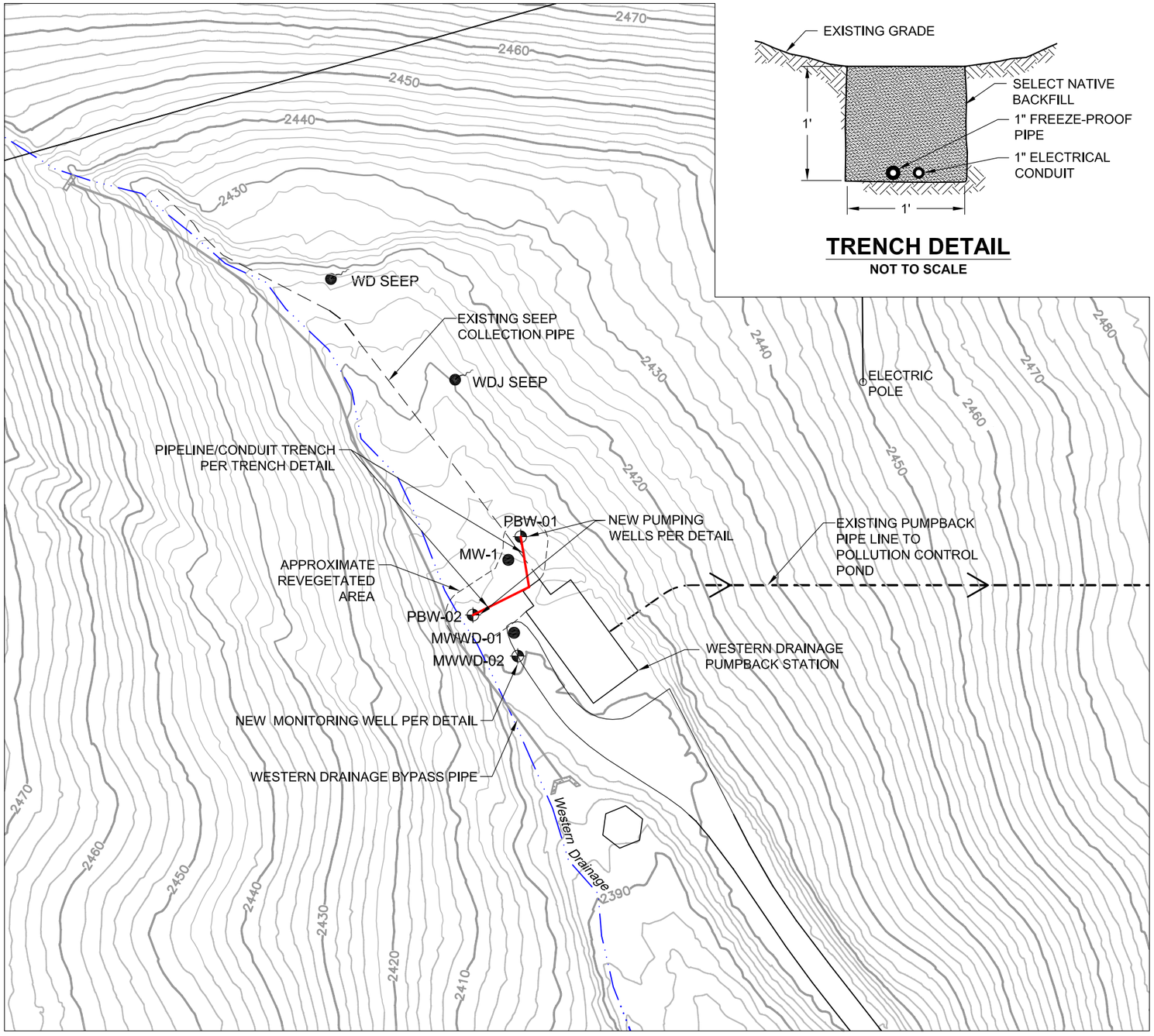

TRENCH DETAIL

NOT TO SCALE

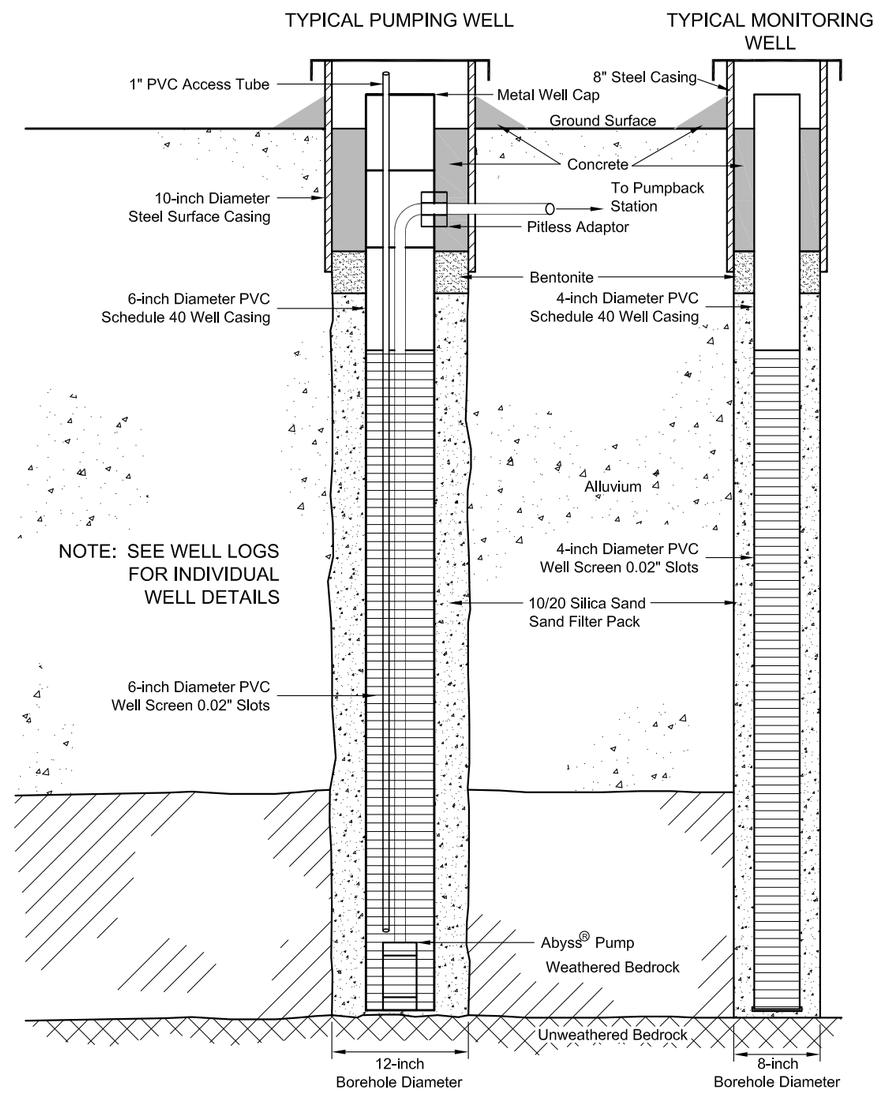

NOT TO SCALE

NOTE: SEE WELL LOG DETAILS FOR INDIVIDUAL WELL SPECIFICATIONS

ALLUVIAL GROUNDWATER WELLS
WESTERN DRAINAGE

SCALE: 1" = 50'

NORTH

SCALE IN FEET 0 50

REVISION	DESCRIPTION	DATE
0	AS-BUILT	12/20/10

MIDNITE MINE

FIGURE 2
WESTERN DRAINAGE
ALLUVIAL GROUNDWATER WELLS

PROJECT: 181850
DATE: DECEMBER, 2010
FILE: INT-MECH-WD-CD

TETRA TECH

E:\181850\Task 4\InterimDesign\AS-BUILT\FIGURE 2.dwg SAVED:12/20/10 PRINTED:12/20/10 BY:TONY.DAVIS

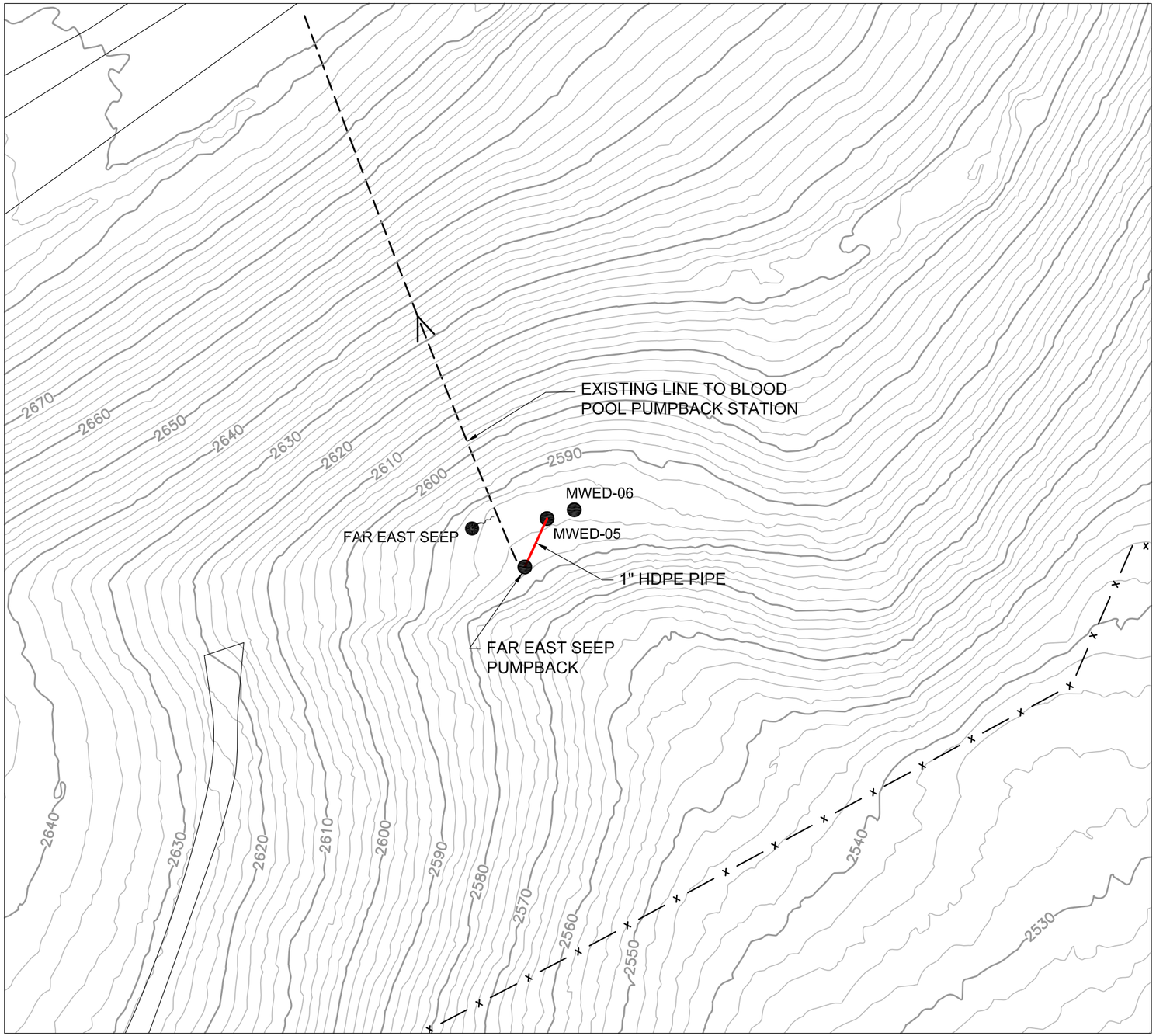

ALLUVIAL GROUNDWATER WELL
FAR EAST SEEP DRAINAGE

SCALE: 1" = 50'

NORTH

SCALE IN FEET

0 50

EXISTING WELL MWED-05

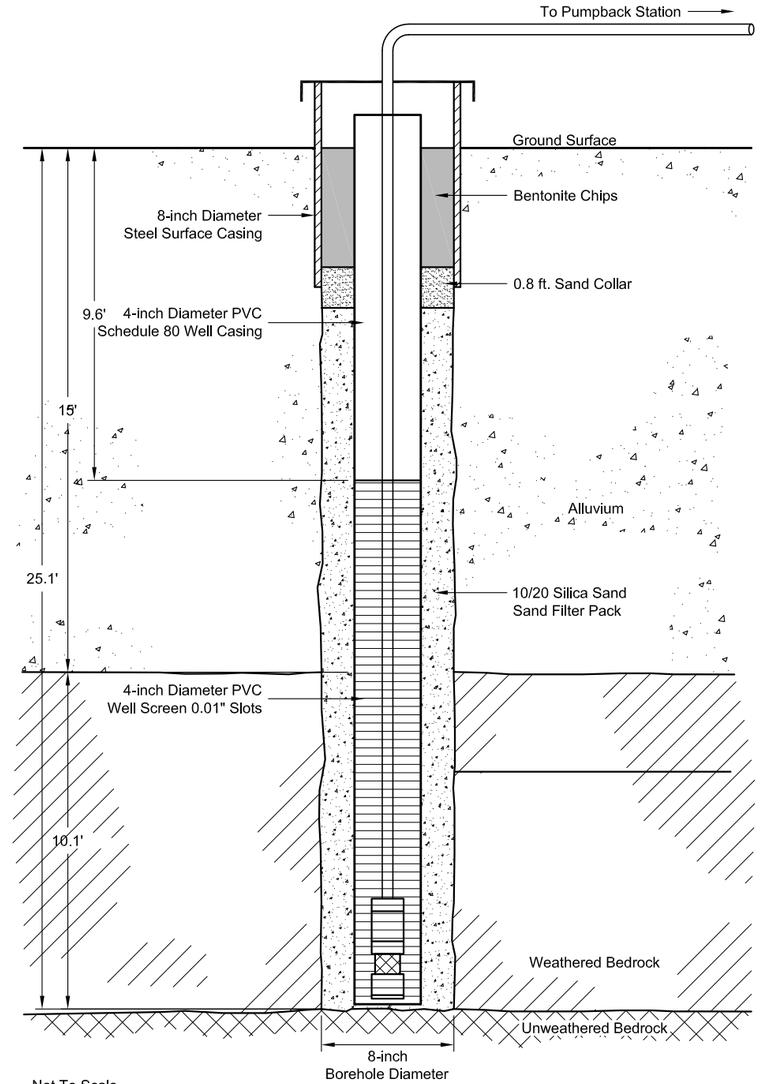

Not To Scale

TEMPORARY PUMP INSTALLATION NON-FREEZING CONDITIONS ONLY

REVISION	DESCRIPTION	DATE
0	AS-BUILT	12/20/10

MIDNITE MINE

FIGURE 3
FAR EAST SEEP DRAINAGE
ALLUVIAL GROUNDWATER WELL

PROJECT: 181850
DATE: DECEMBER, 2010
FILE: INT-MECH-ED

TETRA TECH

E:\181850\Task 4\InterimDesign\AS-BUILT\FIGURE 3.dwg SAVED:12/20/10 PRINTED:12/20/10 BY:TONY.DAVIS

APPENDIX A
GENERAL OPERATING AND EQUIPMENT CRITERIA

1.0 ALLUVIAL GROUNDWATER WELLS

1.1 Central Drainage Alluvial Groundwater Wells

- Pumps
  - Electric Submersible Pump:

    Proactive Environmental Products Abyss® Pump
    12-volt
    Approximately 0.7 gpm
    Can run dry without damaging pump

  - Regulated DC Power Supply:

    Pyramid Gold Series Model: PS-21K

  - Flow Meter:

    Blancett® Model B110-375 Turbine Flow Meter
    316 stainless steel
    3/8” bore, 1” Male NPT

  - Flow Analyzer:

    NUFLO™ MC-III™ WP Flow Analyzer

- Power
  - 15 kva pole mount transformer
  - 50 amp. 230v. single phase service
  - 230v. transfer switch
  - Kohler Power System 8.5Res, 8.5 kw Automatic start generator

1.2 Western Drainage Alluvial Groundwater Wells

- Pumps
    - Electric Submersible Pump:

      Proactive Environmental Products Abyss® Pump
      12-volt
      Approximately 0.7 gpm
      Can run dry without damaging pump

    - Regulated DC Power Supply:

      Pyramid Gold Series Model: PS-21K

    - Flow Meter:

      Blancett® Model B110-375 Turbine Flow Meter
      316 stainless steel
      3/8” bore, 1” Male NPT

    - Flow Analyzer:

      NUFLO™ MC-III™ WP Flow Analyzer

- Power
    - 3 phase, 15 KVA pole mount transformers
    - 200 amp. 480v. 3 phase service
    - Asco series 300, 70 amp. automatic transfer switch
    - Lima Silver Eagle 35 kw diesel generator set

1.3 Far East Seep Pump Station

- Pump
    - Electric Submersible Pump:

      Proactive Environmental Products Mini-Monsoon® Pump
      12-volt
    - Pump Controler

      Proactive Environmental Products Abyss Controller
      With dry shut off sensor Probes

    - Regulated DC Power Supply:

      Pyramid Gold Series Model: PS-21K

    - Flow Meter:

Blancett® Model B110-375 Turbine Flow Meter
316 stainless steel
3/8” bore, 1” Male NPT

- Flow Analyzer:

  NUFLO™ MC-III™ WP Flow Analyzer

- Power.
  - Feeds off of Blood Pool electrical system
  - 230v. transfer switch
  - Generator Power Fed from Blood Pool Pump Station

APPENDIX B
ALLUVIAL GROUNDATER PUMPING DATA SHEETS

Central Drainage (Restroom Seep) Alluvial Groundwater Discharge Data Sheet

Page:

	Depth to Water (ft)	Flow Meter		Discharge Measurement		Initials	Notes
		Total Gallons	GPM	Volume/Time	GPM		
Date/Time:							
PBC-01							
PBC-02							
PBC-03							
MWCD-02							
Date/Time:							
PBC-01							
PBC-02							
PBC-03							
MWCD-02							
Date/Time:							
PBC-01							
PBC-02							
PBC-03							
MWCD-02							
Date/Time:							
PBC-01							
PBC-02							
PBC-03							
MWCD-02							
Date/Time:							
PBC-01							
PBC-02							
PBC-03							
MWCD-02							
Date/Time:							
PBC-01							
PBC-02							
PBC-03							
MWCD-02							

Western Drainage Alluvial Groundwater Discharge Data Sheet

Page:

	Depth to Water (ft)	Flow Meter		Discharge Measurement		Initials	Notes
		Total Gallons	GPM	Volume/Time	GPM		
Date/Time:							
PBW-01							
PBW-02							
MWWD-02							
Date/Time:							
PBW-01							
PBW-02							
MWWD-02							
Date/Time:							
PBW-01							
PBW-02							
MWWD-02							
Date/Time:							
PBW-01							
PBW-02							
MWWD-02							
Date/Time:							
PBW-01							
PBW-02							
MWWD-02							
Date/Time:							
PBW-01							
PBW-02							
MWWD-02							
Date/Time:							
PBW-01							
PBW-02							
MWWD-02							

Far East Seep Drainage Alluvial Groundwater Discharge Data Sheet

Page:

	Depth to Water (ft)	Flow Meter		Discharge Measurement		Initials	Notes
		Total Gallons	GPM	Volume/Time	GPM		
Date/Time:							
MWED-05							
Date/Time:							
MWED-05							
Date/Time:							
MWED-05							
Date/Time:							
MWED-05							
Date/Time:							
MWED-05							
Date/Time:							
MWED-05							
Date/Time:							
MWED-05							
Date/Time:							
MWED-05							
Date/Time:							
MWED-05							
Date/Time:							
MWED-05							
Date/Time:							
MWED-05							
Date/Time:							
MWED-05							
Date/Time:							
MWED-05							
Date/Time:							
MWED-05							
Date/Time:							
MWED-05							

APPENDIX C
MANUFACTURER OPERATIONS AND MAINTENANCE MANUALS

Appendix C
Manufacturer Operations and Maintenance Manuals
Index

1. Proactive Environmental Products Abyss® Pump
2. Pyramid Gold Series Model: PS-21K
3. Blancett® Model B110-375 Turbine Flow Meter Product Sheet
4. Blancett® Model B110-375 Turbine Flow Meter Installation & Instruction Manual
5. NUFLO™ MC-III™ WP Flow Analyzer
6. Proactive Environmental Products Abyss Controller

Proactive Environmental Products Abyss® Pump

12 VOLT Abyss

Instruction Manual

Proactive
ENVIRONMENTAL PRODUCTS

OPERATING INSTRUCTIONS FOR:

The 12 volt *Abyss*

SIMPLE TO USE AND EXTREMELY POWERFUL

The *Abyss* is capable of pumping up to 220 feet from ground level to water level. Simply, connect the pump connector to a 12 volt source. This will energize the pump. Sound Simple? We think so. The *Abyss* is supplied with 230 feet of heavy duty 10 gauge wire, Alligator battery clamps and a male cigarette plug attached to pump.

Great Benefits of the 12 Volt Abyss!

The *Abyss* is practically maintenance free! The only part that may need to be serviced is the replaceable valves (pic#3) every 2,000-3,000 hours or so (depending on turbidity in the water)
The *Abyss* can run continuously 24 hours a day 7 days a week.

The *Abyss* can run dry.

The *Abyss* you can cut the wire down from 230 feet of the 10 gauge wire that comes with the pump will not damage the pump motor it will increase the volume of water being discharged.
The *Abyss* you may control the flow of water being discharged simply purchase our Low Flow Sampling controller. You can then sample as low as 40 m/l per minute. (With the disposable control flow valve as low as 10 m/l per minute!)
The *Abyss* is 3.82" OD. It can fit into any schedule 40, 4 inch or larger well, pond, open vat etc. No need for a cooling shroud

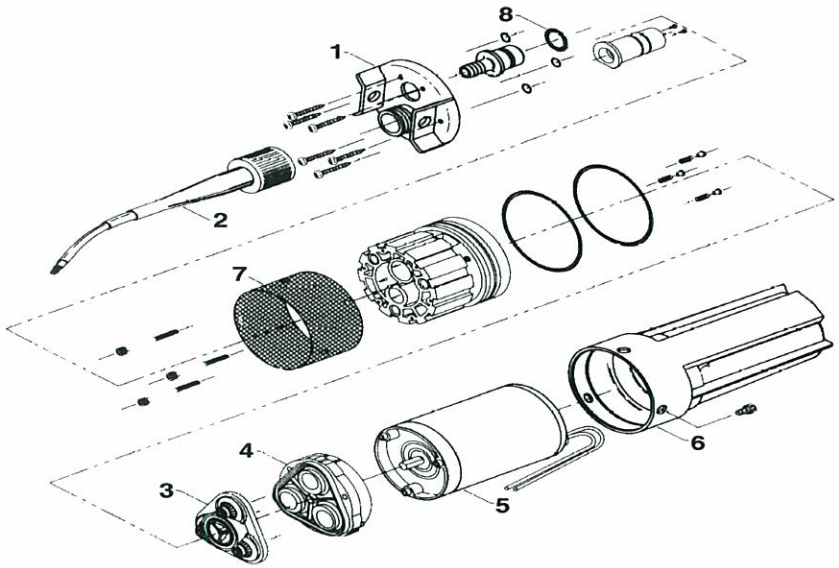

The *Abyss* is constructed of several parts: (please look at the exploded view above).
Replacement parts can be purchased through your authorized Proactive Distributor.

If your pump fails to work-Please follow the trouble shooting guide below.

1. Battery is very low. Check battery level. Must be at least 11 volts minimum.
2. Blown valves#3 (illustration above) needs to be replaced or blown pump motor #5 .
3. Make sure all connectors are plugged into correct outlets.

Important Notes:

If you cut the 10 gauge wire lead to meet your desired wire length then please make sure the polarity is correct!!

Warranty Information

Proactive will warranty the Abyss to be free from defects in material and workmanship affecting its use for a period of 60 days following the date of purchase.

Exclusions and Conditions

The use of any pump with replacement parts or accessories, which are not manufactured by ProActive and which affect product safety or performance, shall render this warranty and all other warranties, whether express or implied, null and void. Should any failure to conform to this warranty appear within the term of initial sale, the manufacturer shall upon notification thereof and substantiation that the pump has been maintained, correct such defects by suitable repair or replacement at its own expense, purchaser being responsible for shipping and handling charges only.

The Proactive warranty does not include shipping or an obligation to provide another unit while the original Abyss pump is being repaired or replaced.

The Proactive warranty does not apply to any Abyss pump used as rental equipment or to submersible pumps contaminated by materials harmful to such products.

The Proactive warranty does not apply to parts failure due to neglect in cleaning or unauthorized servicing the Proactive Abyss pump nor does it cover failure of a part caused by misuse or inappropriate use of the Abyss submersible pump.

Returning the Abyss Submersible Pump to Proactive

Proactive requires that all customers notify Proactive prior to returning a defective Abyss submersible pump under the Proactive warranty program. The Abyss will only be accepted if it has been thoroughly cleaned and decontaminated. In addition, ProActive's Abyss must be properly packaged and accompanied by a receipt of purchase.

Please contact Proactive to obtain a RMA # _____

Please make photo-copy of this manual when returning pump. Please return pump to:

Proactive
ENVIRONMENTAL PRODUCTS
1767 Lakewood Ranch Boulevard, Suite #113
Bradenton, FL 34211
Phone: 1.941.322.8504
Fax: 1.941.322.8519
Web Address: GOPRONOW.BIZ
Email Address: PROACTIVE@GOPRONOW.BIZ

Pyramid Gold Series Model: PS-21K

PYRAMID®
Gold Series

REGULATED DC POWER SUPPLY

MODEL: PS-21K

INSTRUCTION MANUAL

GENERAL SPECIFICATION ·····PAGE 2.
SCHEMATIC DIAGRAM ·····PAGE 3.
OPERATION MANUAL & CAUTION ·····PAGE 4.

GENERAL SPECIFICATIONS.

MODEL NO: PS-21K

ELECTRICAL:

(A-1) INPUT RATING

INPUT VOLTAGE: 105VAC-125VAC. (115VAC NORMAL)

INPUT LINE FREQUENCY: 60 Hz.

INPUT POWER: 450W MAX.

(A-2) OUTPUT RATING

OUTPUT VOLTAGE: 13.8VDC ± 0.3VDC.

OUTPUT CURRENT: 18 AMP CONSTANT / 20 AMP SURGE

OUTPUT RIPPLE: 150mV RMS

(A-3) REGULATION

LOAD REGULATION: 2.5% (280mV).

(NOTE: INPUT AT 115VAC AND OUTPUT AT 18 AMP)

(A-4) PROTECTION

INPUT LINE: GLASS TUBE FUSE 6A / 250VAC.

OVER-LOAD PROTECTION: +10 ~ 15% (AUTO RESET).

OVER-TEMPERATURE PROTECTION

COOLING FAN BUILT-IN

PROTECTION INDICATOR: RED LED

(A-5) EFFICIENCY: 60% MIN. (INPUT AT 115VAC AND OUTPUT AT 13.8VDC 18AMP).

(A-6) DESIGN: LINEAR TYPE.

(A-7) OPERATING TEMPERATURE: 0 TO +40 DEG C.

(A-8) STORAGE TEMPERATURE: -25 TO +70 DEG C.

MECHANICAL:

(B-1) DIMENSIONS: 300mmx230mmx125mm (LxWxH)

(B-2) WEIGHT: 7.5 KGS

(B-3) ENCLOSURE: METAL/GRAY

(B-4) INPUT POWER CABLE: SPT-2 6FT 18AWGx2CW/1-15P-P PLUG.

(B-5) OUTPUT TERMINAL: BINDING POST RED & BLK, 25AMP.

(B-6) POWER SWITCH: ILLUMINATED TYPE 15A/125VAC.

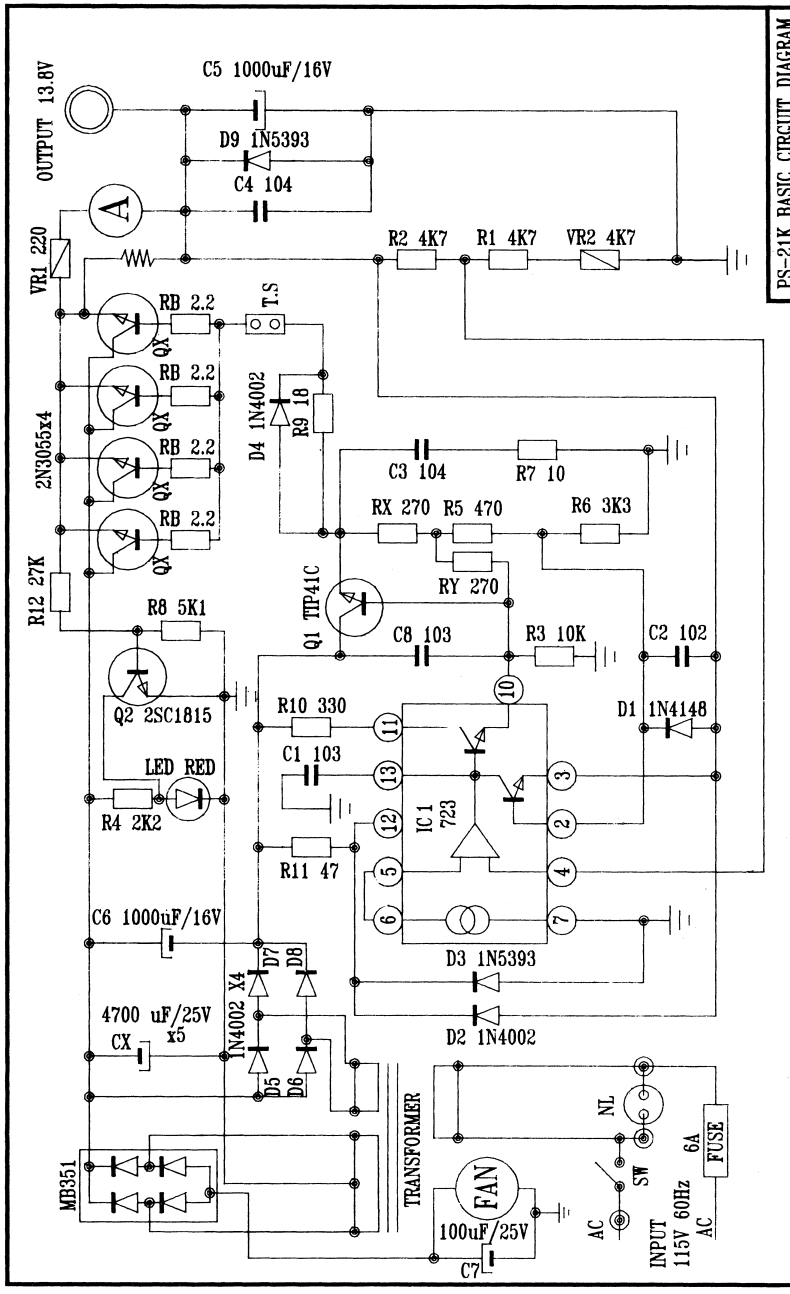
PS-21K BASIC CIRCUIT DIAGRAM
OUTPUT 13.8V
C5 1000uF/16V
D9 1N5393
C4 104
VR1 220
R2 4K7
R1 4K7
VR2 4K7
RB 2.2
T.S
QX
2N3055x4
D4 1N4002
R9 18
C3 104
R7 10
RX 270
R5 470
R6 3K3
RY 270
R12 27K
R8 5K1
Q1 TIP41C
C8 103
R3 10K
C2 102
Q2 2SC1815
R10 330
D1 1N4148
C1 103
LED RED
R4 2K2
IC 1
723
R11 47
C6 1000uF/16V
D7
D8
X4
1N4002
D3 1N5393
4700 uF/25V
x5
CX
D2 1N4002
D5
D6
TRANSFORMER
NL
6A
FUSE
MB351
FAN
SW
AC
INPUT
115V 60Hz
AC
100uF/25V
C7

OPERATIONS·

1. INSERT AC POWER PLUG INTO A 110V VOLT AC OUTLET.
2. CONNECT THE POWER CORD OF YOUR EQUIPMENT (13.5V-14.1VDC) TO THE OUTPUT BINDING POST TERMINALS ON THE FRONT OF THE UNIT. BE SURE THAT POLARITY IS CORRECT. THE RED POSITIVE(+) TERMINAL AND BLACK NEGATIVE(−) TERMINAL ARE MARKED, REVERSAL OF POLARITY MAY DAMAGE YOUR EQUIPMENT
3. TURN SWITCH TO "ON" RED LIGHT IN SWITCH WILL BE ILLUMINATED.
4. THE INPUT POWER IS PROTECTED BY THE FUSE WHICH IS LOCATED AT THE REAR OF THE UNIT AND CAN BE REPLACED BY UNSCREWING THE FUSE HOLDER IF THE FUSE IS BURNT OUT. DO NOT USE A FUSE LARGER THAN 6 AMP. USE OF HEAVIER FUSE MAY RESULT IN DAMAGING TO THIS UNIT.
5. THIS UNIT HAS ELECTRONIC OVERLOAD PROTECTION WITH INSTANT AUTOMATIC RESET FUNCTION. IF OUTPUT IS OVERLOADED, THE OUTPUT POWER WILL AUTOMATICALLY SHUT OFF. RELEASE POWER CORD OF YOUR EQUIPMENT FROM THE OUTPUT TERMINALS AND CHECK THE ACTUAL POWER RATING OF YOUR EQUIPMENT. THIS UNIT WILL AUTOMATICALLY RESET INSTANTLY.

CAUTIONS:

1. DO NOT USE WITH EQUIPMENT REQUIRING MORE THAN RATING AMPS.
2. DO NOT USE OUTDOORS. DO NOT EXPOSE UNIT TO RAIN, MOISTURE, WATER OR ANY OTHER LIQUIDS.
3. DO NOT REMOVE COVER IN ANY CASE. RETURN TO DEALER FOR REPAIR IF DAMAGED.
4. THIS UNIT HAS A SPECIAL BUILT-IN FEATURE THAT WILL SHUT THE UNIT DOWN IF MARKED AMPERAGE IS EXCEEDED. THIS WILL AVOID BURN-OUT OF YOUR EQUIPMENT AND OF UNIT. IF UNIT DOES CONSISTENTLY SHUTDOWN, THIS MEANS YOU ARE DRAWING TOO MUCH AMPERAGE. RETURN UNIT TO PLACE OF PURCHASE AND UPGRADE TO NEXT AVAILABLE UNIT OFFERING HIGHER AMPERAGE. PLEASE DO NOT BYPASS OR ALTER THIS CIRCUIT AS IT IS THERE TO PROTECT YOU. ANY ALTERATION OR MISUSE WILL VOID YOUR WARRANTY.

"DANGER"
HIGH VOLTAGE
REFER TO QUALIFIED TECHNICIAN FOR SERVICE.

Blancett® Model B110-375 Turbine Flow Meter Product Sheet

Blancett®

Flow Meters

Model 1100 Turbine Flow Meter

- Accurate and repeatable flow measurement from 0.6 - 3 gpm (20 - 100 BPD) to 500 - 5,000 gpm (17,000 - 171,000 BPD)
- Capable of electronic integration, to provide displayed flow rate, totalization, current or voltage outputs
- Capable of measuring flow on piping systems from 1/2" to 10"
- Superior materials of construction for high performance in aggressive environments
- Only one moving part for reduced maintenance costs

1-800-235-1638 ■ www.blancett.com

CSA® C US · CLASSIFIED MET® C US · RACINE FEDERATED INC. UL® REGISTERED FIRM ISO 9001:2008 FILE NO. A6856

Introduction

The Model 1100 Turbine Flow Meter is designed to withstand the demands of the most rigorous flow measurement applications. Originally developed for the secondary oil recovery market, the Model 1100 is an ideal meter for liquid flow measurement on or off the oilfield.

The meter features a rugged 316 stainless steel housing and rotor support assemblies, CD4MCU stainless steel rotor, and abrasive-resistant tungsten carbide rotor shaft and journal bearings. The Model 1100 maintains measurement accuracy and mechanical integrity in the corrosive and abrasive fluids commonly found in oil field water flood projects and many industrial applications.

Designed to operate with the Model B2800 Flow Monitor, the Model 1100 turbine meter meets a wide range of measurement requirements. This makes it ideal for applications such as pipelines, production/injection fields, in-situ mining operations, offshore facilities, and other industrial applications.

Features

- Offers accurate and repeatable flow measurement in ranges from 0.6 to 5,000 GPM (20 to 171,000 BPD)
- Cost-effective solution for turbine flow meter applications
- Rugged 316 stainless steel construction offers long service life in severe operating environments
- Available in NPT, BSP, Victaulic®, Flange, or Hose Barbed end connections
- NIST traceable calibration
- Installation in pipe sizes from 1/2" to 10"
- Integrate electronically with B2800 Flow Monitor, K-factor Scaler, or the F to I/F to V Intelligent Converter
- Field replaceable repair kits allow for turbine replacement without loss of accuracy

Operating Principle

Fluid entering the meter passes through the inlet flow straightener which reduces its turbulent flow pattern and improves the fluid's velocity profile. Fluid then passes through the turbine, causing it to rotate at a speed proportional to fluid velocity. As each turbine blade passes through the magnetic field at the base of the transducer, an AC voltage pulse is generated in the pickup coil. These pulses produce an output frequency proportional to the volumetric flow through the meter.

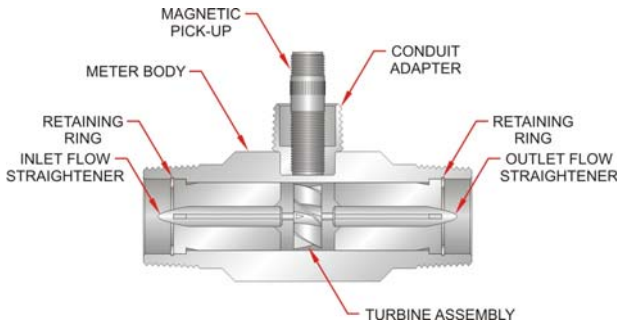

Specifications

Materials of Construction:
Body; 316 Stainless Steel
Rotor; CD4MCU Stainless Steel
Rotor Support; 316 Stainless Steel
Rotor Shaft; Tungsten Carbide

Turndown Ratio: 10:1

Flow Accuracy: ±1% of reading for ⅞" and larger meters
±1% of reading over the upper 70% of the measuring range for ⅜", ½" and ¾" meters

Repeatability: ± 0.1%

Calibration: Water (NIST traceable calibration)

Pressure Rating: 5,000 psi (maximum)

Turbine Temperature: -150 °F to +350 °F (-101 °C to 177 °C)

End Connections: NPT, BSP, Victaulic®, Flange, Hose Barbed

Approvals: CSA Class I Div 1, Groups C & D;
Class II Div 1, Groups E, F & G: intrinsically safe*
CSA Class I Div 1 Groups C,D; Complies to UL 1203 and CSA 22.2 No. 30
Met Labs File No. E112860 (For Explosion proof models only)

*Contact factory for ordering options

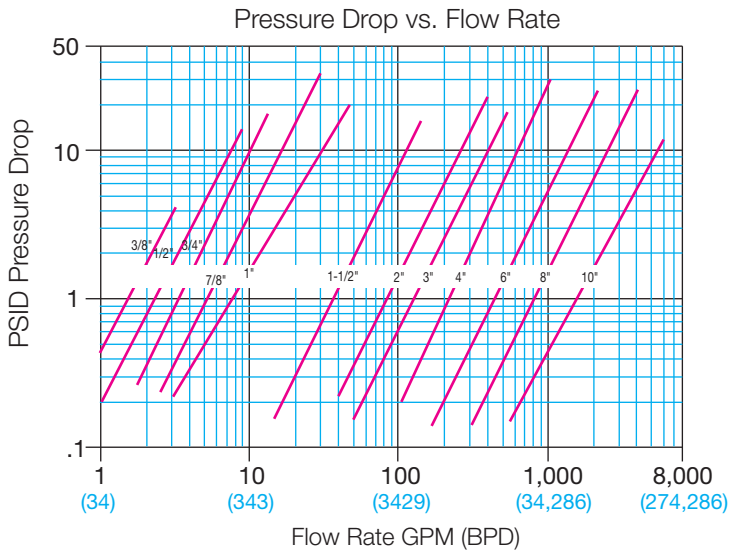

Model 1100 Turbine Meters & Repair Kits

Part Number*	Bore Size	End Connections	Max. PSI	Flow Ranges GPM	Flow Ranges BPD	Flow Ranges M^3/D	Recommended Strainer Mesh	Approx. K-Factor Pulses/Gal	Meter Weight	End to End Length	Repair Kit Part Number
B110-375-1/2	3/8"	1/2" Male NPT	5,000	0.6 - 3	20 - 100	3.3 - 16	60	18,000	1	3"	B251-102
B110-500-1/2	1/2"	1/2" Male NPT	5,000	0.75 - 7.5	25 - 250	4.1 - 41	60	13,000	1	3"	B251-105
B110-750-1/2	3/4"	1/2" Male NPT	5,000	2 - 15	68 - 515	10.9 - 81.75	60	3,300	1	3"	B251-108
B110-375	3/8"	1" Male NPT	5,000	0.6 - 3	20 - 100	3.3 - 16	60	18,000	2	4"	B251-102
B110-500	1/2"	1" Male NPT	5,000	0.75 - 7.5	25 - 250	4.1 - 41	60	13,000	2	4"	B251-105
B110-750	3/4"	1" Male NPT	5,000	2 - 15	68 - 515	10.9 - 81.75	60	3,300	2	4"	B251-108
B110-875	7/8"	1" Male NPT	5,000	3 - 30	100 - 1,000	16 - 160	60	3,100	2	4"	B251-109
B111-110	1"	1" Male NPT	5,000	5 - 50	170 - 1,700	27.25 - 272.5	40	870	2	4"	B251-112
B111-115	1-1/2"	1-1/2" Male NPT	5,000	15 - 180	515 - 6,000	82 - 981	20	330	5	6"	B251-116
B111-121	1-1/2"	2" Male NPT	5,000	15 - 180	515 - 6,000	82 - 981	20	330	6	6"	B251-116
B111-120	2"	2" Female NPT	5,000	40 - 400	1,300 - 13,000	218 - 2,180	20	52	14	10"	B251-120
B111-130	3"	3" Grooved End	800	60 - 600	2,100 - 21,000	327 - 3,270	10	57	15	12-1/2"	B251-131
B111-140	4"	4" Grooved End	800	100 - 1,200	3,400 - 41,000	545 - 6,540	10	29	20	12"	B251-141
B111-160	6"	6" Grooved End	800	200 - 2,500	6,800 - 86,000	1,090 - 13,626	4	7	46	12"	B251-161
B111-180	8"	8" Grooved End	800	350 - 3,500	12,000 - 120,000	1,363 - 19,076	4	3	56	12"	B251-181
B111-200	10"	10" Grooved End	800	500 - 5,000	17,000 - 171,000	2,725 - 27,252	4	1.6	80	12"	B251-200

** Part number includes turbine meter and standard magnetic pickup. For other pickup options, see table below.*
Note: Insert a "C" before dash for turbine meters with explosion proof rating. No pick-up included. Example: B111C-110

Installation

The Model 1100 Turbine Meter is simple to install and service. It operates in any orientation (horizontal to vertical) as long as the "flow direction" arrow is aligned in the same direction as the actual line flow. For optimum performance, the flow meter should be installed with a minimum of 10 diameters upstream straight pipe length and 5 diameters downstream straight pipe length.

Repair Kits

Factory calibrated replacement kits are available for field or factory service. This is of particular importance when fluids contain abrasive contaminants and meters require frequent service.

A repair kit contains two retaining rings, two rotor supports, one rotor assembly, and a K-factor tag. The rotor support assembly is retained in proper position within the meter body by retainer rings. These rings allow for quick and easy disassembly and replacement of the meter's internal components. The Model 1100 repair kits are designed and manufactured for use with Blancett turbines and other flow meters of similar design; contact the factory or refer to Form #4300 for further details.

K-factor

The K-factor represents the number of output pulses transmitted per gallon of fluid passing through the turbine meter. Each turbine has a unique K-factor. However, turbine meters are not functionally consistent throughout the full flow range of the meter.

There are several forms of "friction" inherent in turbine meters that retard the rotational movement of the turbine rotor. These frictional forces include: magnetic drag, created by electromagnetic force of pickup transducers; mechanical drag, due to bearing friction; and viscous drag, produced by flowing fluid. See charts at right.

As flow increases, the frictional forces are minimized and the free-wheeling motion of the turbine rotor becomes more linear (proportional to flow). The K-factor becomes relatively constant and linear throughout the balance of the linear flow range. This is approximately a 10:1 turndown ratio from the maximum flow rate down to the minimum flow rate.

Model 1100 Pickup Options

Part Number	Magnetic Pickup	Temperature Range
B111109	Standard	-150 °F to +330 °F (-101 °C to +165 °C)
B220111	High Temperature	-150 °F to +450 °F (-101 °C to +232 °C)
B220210	with Preamplifier	-20 °F to +160 °F (-29 °C to +71 °C)
B220243	Intrinsically Safe, FM rated	-150 °F to +330 °F (-101 °C to +165 °C)
B111126	ATEX Ex II 1G; EEx ia IIC T5	-58 °F to + 248 °F (-50 °C to +120 °C)

Typical K-factor Curve (Pulses per Gallon)

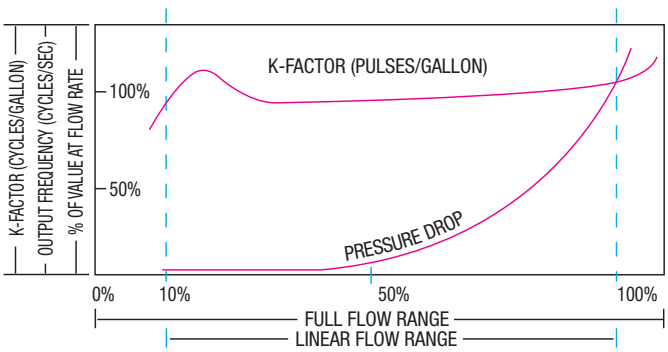

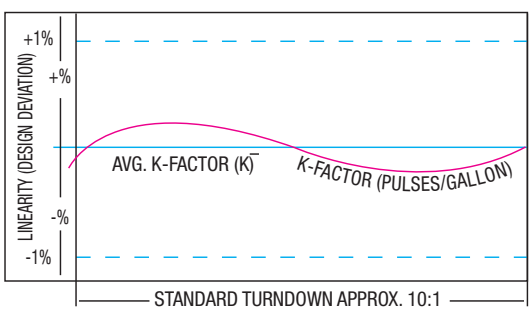

Related Blancett Products

B2800 Flow Monitor

- Microprocessor-based flow monitor and totalizer
- Use with Blancett turbine flow meters as well as other flow meters with a frequency output
- Battery (1.5 VDC) and loop-powered (4-20 mA) versions
- Meter, remote, panel and swivel mounting options
- Hand-held and explosion-proof models also available
- CSA and CE approved
- Class 1, Division 1 (Intrinsically Safe) certification

K-Factor Scaler Frequency Divider

- Scales turbine meter output to desired engineering units
- Amplifies turbine meter pulse output
- Converts frequency outputs into recognizable units for PLCs and other devices
- Switch-selectable or programmable versions available
- CSA approved

F to I / F to V Intelligent Converter

- Converts turbine frequency output into scaled analog output
- Linearized output capability
- Choice of 4-20 mA or 0-5 VDC output
- Enables integration with data acquisition devices
- Frequency measurement accuracy ±1%
- CSA approved

Blancett® Flow Meters

8635 Washington Avenue, Racine, WI 53406-3738 U.S.A.

Toll Free: 800-235-1638 Technical Toll Free: 877-722-4631
Tel: 262-639-6770 Fax: 262-639-2267

E-mail: info@blancett.com

Blancett is a registered trademark of Racine Federated Inc.
Victaulic is a registered trademark of Victaulic Company.
CSA is a registered trademark of Canadian Standards Association.
MET is a registered trademark of MET Laboratories, Inc.
© 2009 Racine Federated Inc., all rights reserved

Printed in USA 11/09 Form No. 1100

Blancett® Model B110-375 Turbine Flow Meter Installation & Instruction Manual

Blancett®

Flow Meters

MODEL 1100 TURBINE FLOW METER

INSTALLATION & INSTRUCTION MANUAL

8635 Washington Avenue
Racine, Wisconsin 53406
Technical Toll-Free: 877.722.4631
Sales Toll-Free: 800.235.1638
Phone: 262.639.6770 Fax: 262.417.1155
www.blancett.com

RACINE FEDERATED, INC.
UL
REGISTERED FIRM
ISO 9001 - 2000 FILE NO. A8596

TABLE OF CONTENTS

Introduction **4**

Specifications **6**

Installation **7**

Operational Start-Up **9**

Troubleshooting **11**

Repair Kit Information **12**

Statement of Warranty **13**

INTRODUCTION

Fluid entering the meter passes through the inlet flow straightener which reduces its turbulent flow pattern and improves the fluid's velocity profile. Fluid then passes through the turbine blades causing it to rotate at a speed proportional to the fluid velocity. As each blade passes through the magnetic field, created at the base of the pickoff transducer, AC voltage (pulse) is generated in the pick-up coil (see **Figure 1**). These impulses produce an output frequency proportional to the volumetric flow through the meter. The output frequency is used to represent flow rate and/or totalization of fluid passing through the turbine flow meter.

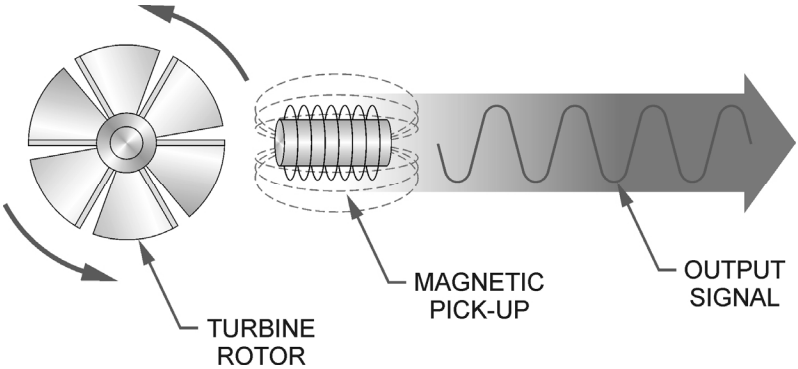

Figure 1
Schematic illustration of electric signal generated by rotor movement

TURBINE METER and REPAIR KIT

The Model 1100 Turbine Flow Meter is designed to withstand the rigorous demands of the most remote flow measurement applications. The Model 1100 Flow Meter maintains measurement accuracy and mechanical integrity in the corrosive and abrasive fluids commonly found in oil field waterflood project pipelines, in-situ mining operations, offshore facilities and plant locations. Simple to install and service, it can operate in any orientation (horizontal to vertical) as long as the "flow direction" arrow is aligned in the

same direction as the actual line flow. For optimum performance, the flow meter should be installed with a minimum of 10 diameters upstream pipe length and 5 diameters downstream pipe length.

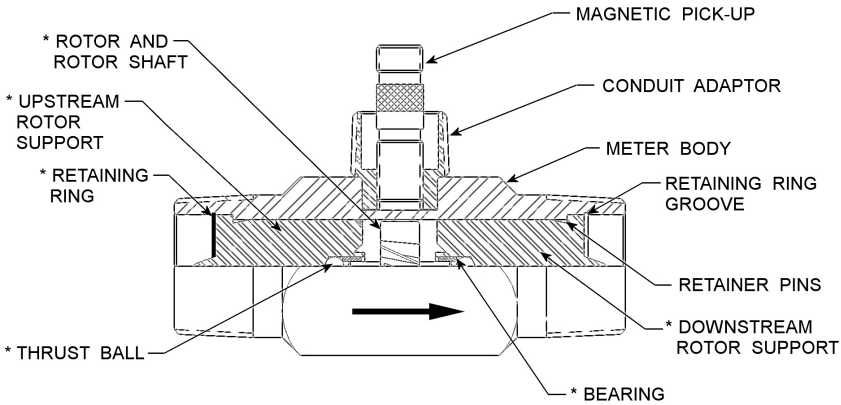

NOTE: * INDICATES PARTS CONTAINED IN REPAIR KITS

Figure 2
Typical cross-section of B110-375 through B111-121 turbine flow meter

SPECIFICATIONS

MATERIALS of CONSTRUCTION:

Body: 316 Stainless Steel
Rotor: CD4MCU Stainless Steel
Rotor Support and Bearings: 316 Stainless Steel
Rotor Shaft: Tungsten Carbide

OPERATING LIMITATIONS:

Temperature: -150 °F to +350 °F (-101 °C to +177 °C) The meter should not be subjected to temperatures above +350° F (177° C), or below -150° F (-101° C) or the freezing point of the metered liquid. High temperatures will damage the magnetic pick-up, while lower temperatures will limit the rotation of the rotor.

Pressure: Maximum pressure ratings as follows:
5,000 psi ─ all NPT meters up to 2"
2,000 psi ─ 3" male NPT
1,500 psi ─ 4" male NPT
1,000 psi ─ 6" male NPT
800 psi ─ all grooved end meters
Note: Consult factory for pressure ratings for flanged meters.

WARNING: *Pressure in excess of allowable rating may cause the housing to burst and cause serious personal injury.*

Accuracy: ± 1.0% of reading

Repeatability: ± 0.1%

Calibration: Water (NIST Traceable Calibration)

Corrosion: All Blancett Model 1100 turbine meters are constructed of stainless steel and tungsten carbide. The operator must ensure that the operating fluid is compatible with these materials. Incompatible fluids can cause deterioration of internal components and cause a reduction in meter accuracy.

Pulsation and Vibration: Severe pulsation and mechanical vibration will affect accuracy and shorten the life of the meter

Filtration: If small particles are present in the fluid, Blancett recommends that a strainer be installed upstream of the meter (see **Table 1** on page 8 for filtration recommendations).

REPAIR KIT:

The Model 1100 Turbine Meter Repair Kit is designed for easy field service of a damaged flow meter, rather than replacing the entire flow meter (see Appendix B on page 12 for repair kit information). Repair parts are constructed of stainless steel alloy and tungsten carbide and are factory calibrated to ensure accuracy throughout the entire flow range. Each kit is complete and includes the calibrated K-factor which is used to recalibrate the flow monitor or other electronics to provide accurate output data.

INSTALLATION INSTRUCTIONS

Prior to installation, the flow meter should be checked internally for foreign material and to ensure the turbine rotor spins freely. Fluid lines should also be checked and cleared of all debris.

The flow meter must be installed with the flow arrow, etched on the exterior of the meter body, pointing in the direction of fluid flow. Though the meter is designed to function in any position it is recommended, where possible, to install horizontally with the magnetic pick-up facing upward.

The liquid being measured should be free of any large particles that may obstruct rotation of the rotor. If particles are present, a mesh strainer should be installed upstream before operation of the flow meter. (See **Table 1** on page 8.)

PART NUMBER	STRAINER MESH	CLEARANCE	FILTER SIZE
B110-375	60 × 60	.0092	260 Micron
B110-500	60 × 60	.0092	260 Micron
B110-750	60 × 60	.0092	260 Micron
B110-875	60 × 60	.0092	260 Micron
B111-110	60 × 60	.0092	260 Micron
B111-115	20 × 20	.0340	.86mm
B111-120	10 × 10	.0650	1.6mm
B111-121	20 × 20	.0340	.86mm
B111-130, B311-004	8 × 8	.0900	2.3mm
B111-140, B311-084	10 × 10	.0650	1.6mm
B111-160, B311-085	4 × 4	.1875	4.8mm
B111-180	8 × 8	.0900	2.3mm
B111-200	4 × 4	.1875	4.8mm

Table 1
Strainer Mesh Installation Details

The preferred plumbing setup is one containing a by-pass line (**Figure 3** on page 10) that allows meter inspection and repair without interrupting flow. If a by-pass line is not utilized, it is important that all control valves be located downstream of the flow meter (**Figure 4** on page 10).

CAUTION: *Damage can be caused by striking an empty meter with a high velocity flow stream.*

This is true with any restriction in the flow line that may cause the liquid to flash. If necessary, air eliminators should be installed to ensure that the meter is not incorrectly measuring entrained air or gas.

It is recommended that a minimum length, equal to ten (10) pipe diameters of straight pipe, be installed on the upstream side and five (5) diameters on the downstream side of the flow meter. Otherwise, meter accuracy may be affected. Piping should be the same size as the meter bore or threaded port size.

Do not locate the flow meter or connection cable close to electric motors, transformers, sparking devices, high voltage lines, or place connecting cable in conduit with wires furnishing power for such devices. These devices can induce false signals in the flow meter coil or cable, causing the meter to read inaccurately.

If problems arise with the flow meter and monitor, consult **Appendix A** (Troubleshooting Guide) on page 11. If further problems arise, consult the factory.

If the internal components of the turbine flow meter are damaged beyond repair, turbine meter repair kits are available. Information pertaining to the turbine meter repair kits is referenced in **Appendix B** on page 12.

OPERATIONAL START-UP

The following steps should be followed when installing and starting the meter.

> ***WARNING:*** *Make sure that fluid flow has been shut off and pressure in the line released before attempting to install the meter in an existing system.*

1. After meter installation, close the isolation valves and open the by-pass valve. Flow liquid through the by-pass valve for sufficient time to eliminate any air or gas in the flow line.

> ***CAUTION:*** *High velocity air or gas may damage the internal components of the meter.*

2. Open upstream isolating valve slowly to eliminate hydraulic shock while charging the meter with the liquid. Open the valve to full open.

3. Open downstream isolating valve to permit meter to operate.
4. Close the by-pass valve to a full closed position.
5. Adjust the downstream valve to provide the required flow rate through the meter. Note: The downstream valve may be used as a control valve.

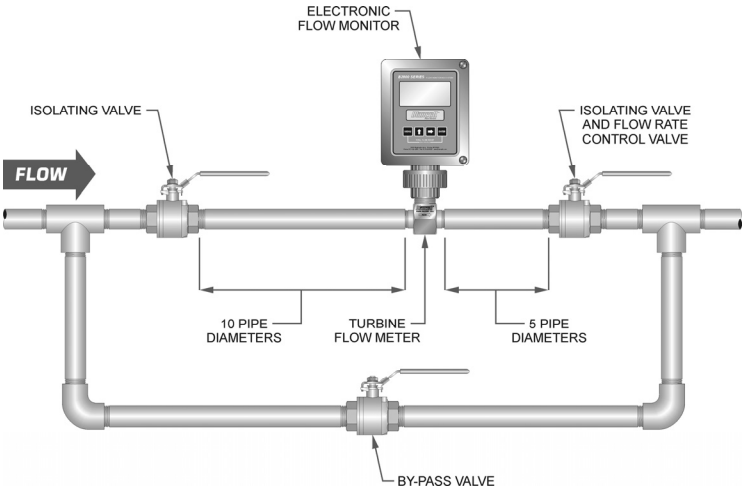

Figure 3
Meter installation utilizing a by-pass line

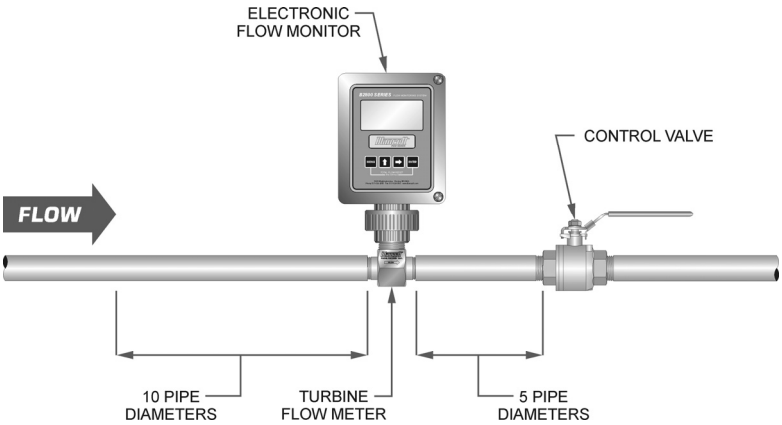

Figure 4
Meter installation without utilizing a by-pass line

APPENDIX A
TROUBLESHOOTING GUIDE

Trouble	Possible Cause	Remedy
Meter indicates higher than actual flow rate	-Cavitation -Debris on rotor support -Build up of foreign material on meter bore -Gas in liquid	-Increase back pressure -Clean meter -Clean meter -Install gas eliminator ahead of meter
Meter indicates lower than actual flow rate	-Debris on rotor -Worn bearing -Viscosity higher than calibrated	-Clean meter and add filter -Clean meter and add filter -Recalibrate monitor
Erratic system indication, meter alone works well (remote monitor application only)	Ground loop in shielding	Ground shield one place only. Look for internal electronic instrument ground. Reroute cables away from electrical noise
Indicator shows flow when shut off	Mechanical vibration causes rotor to oscillate without turning	Isolate meter
No flow indication. Full or partial open position	Fluid shock, full flow into dry meter or impact caused bearing separation or broken rotor shaft	Rebuild meter with repair kit and recalibrate monitor. Move to location where meter is full on start-up or add downstream flow control valve
Erratic indication at low flow, good indication at high flow	Rotor has foreign material wrapped around it	Clean meter and add filter
No flow indication	Faulty pick-up	Replace pick-up
System works perfect, except indicates lower flow over entire range	By-pass flow, leak	Repair or replace by-pass valves, or faulty solenoid valves
Meter indicating high flow, upstream piping at meter smaller than meter bore	Fluid jet impingement on rotor	Change piping
Opposite effects of above	Viscosity lower than calibrated	Change temperature, change fluid or recalibrate meter

APPENDIX B
REPAIR KIT INFORMATION

Flow Meter Size	Repair Kit Fits Meter Part Number	Repair Kit Part Number
3/8"	B110-375, B110-375-1/2	B251-102
1/2"	B110-500, B110-500-1/2	B251-105
3/4"	B110-750, B110-075-1/2	B251-108
7/8"	B110-875	B251-109
1"	B111-110	B251-112
1-1/2"	B111-115	B251-116
2" Low	B111-121	B251-116
2"	B111-120	B251-120
3"	B111-130, B311-004	B251-131
4"	B111-140, B311-084	B251-141
6"	B111-160, B311-085	B251-161
8"	B111-180	B251-181
10"	B111-200	B251-200
Standard Magnetic Pick-up	All Meter Sizes	B111109

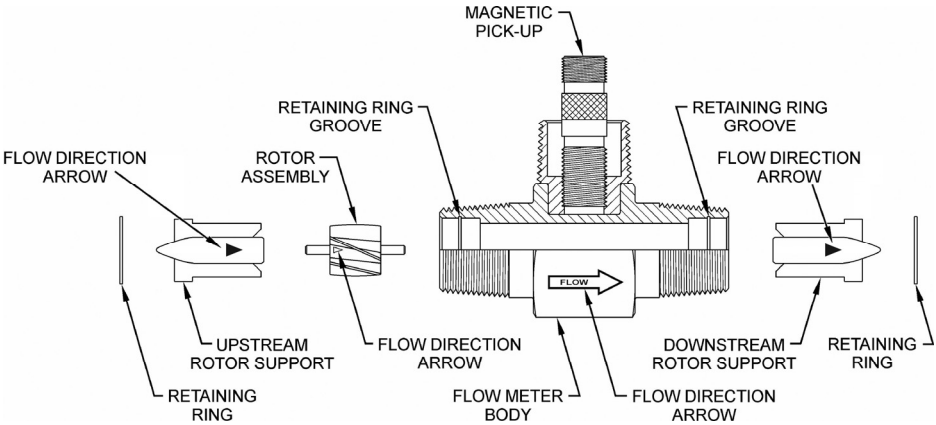

Figure 5
Typical turbine meter component directory

STATEMENT OF WARRANTY

Blancett Flow Meters, Division of Racine Federated Inc. warrants to the end purchaser, for a period of one year from the date of shipment from the factory, that all flow meters manufactured by it are free from defects in materials and workmanship. This Warranty does not cover products that have been damaged due to defects caused by misapplication, abuse, lack of maintenance, modified or improper installation. Blancett's obligation under this warranty is limited to the repair or replacement of a defective product, at no charge to the end purchase, if the product is inspected by Blancett and found to be defective. Repair or replacement is at Blancett's discretion. A return goods authorization (RGA) number must be obtained from Blancett before any product may be returned for warranty repair or replacement. The product must be thoroughly cleaned and any process chemicals removed before it will be accepted for return.

The purchaser must determine the applicability of the product for its desired use and assumes all risks in connection therewith. Blancett assumes no responsibility or liability for any omissions or errors in connection with the use of its products. Blancett will under no circumstances be liable for any incidental, consequential, contingent or special damages or loss to any person or property arising out of the failure of any product, component or accessory.

All expressed or implied warranties, including **the implied warranty of merchantability and the implied warranty of fitness for a particular purpose or application are expressly disclaimed** and shall not apply to any products sold or services rendered by Blancett.

The above warranty supersedes and is in lieu of all other warranties, either expressed or implied and all other obligations or liabilities. No agent or representative has any authority to alter the terms of this warranty in any way.

NOTES

8635 Washington Avenue • Racine, Wisconsin 53406
Technical Toll-Free: 877.722.4631
Sales Toll-Free: 800.235.1638
Phone: 262.639.6670 • Fax: 262.417.1155

Blancett is a registered trademark of Racine Federated Inc.
UL is a registered trademark of Underwriters Laboratories.
© 2008 Racine Federated Inc.

Form: Model 1100 Manual
Revision 08/08

NUFLO™ MC-III™ WP Flow Analyzer

NUFLO™

MC-III™ WP Flow Analyzer

User Manual

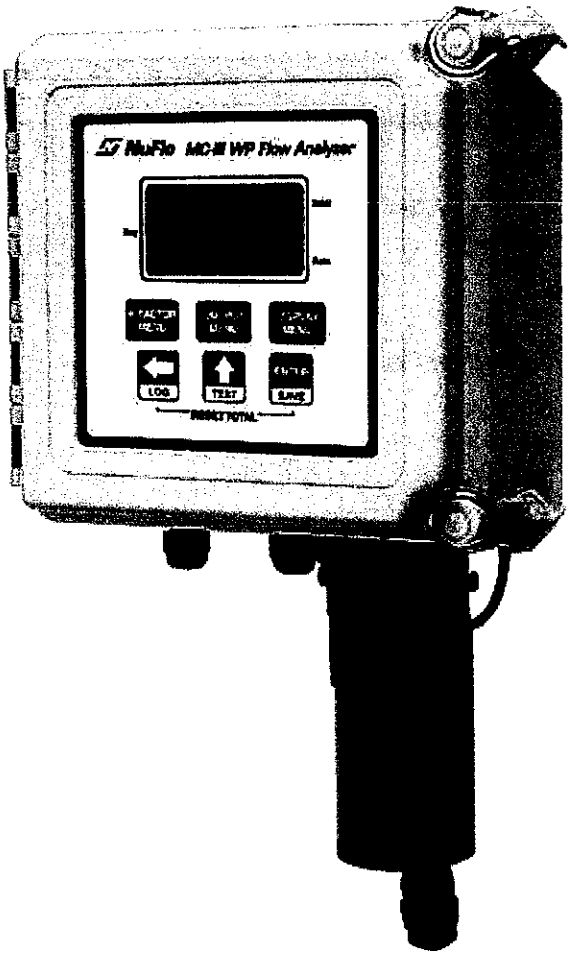

Manual No. 9A-50165009, Rev. 02

Important Safety Information

Symbols Used in this Manual

WARNING	This symbol identifies information about practices or circumstances that can lead to personal injury or death, property damage, or economic loss.

Terms Used in this Manual

Caution:	**Indicates actions or procedures which if not performed correctly may lead to personal injury or incorrect function of the instrument or connected equipment.**
Important:	**Indicates actions or procedures which may affect instrument operation or may lead to an instrument response which is not planned.**

Symbols Marked on Equipment

Attention! Refer to manual

Protective (earth) ground

Technical Support Contact Information

Cameron
Measurement Systems Division
14450 John F. Kennedy Blvd.
Houston, TX 77032
Phone: 1-800-654-3760; 281-582-9500
Fax: 281-582-9599

NuFlo and MC-III are trademarks of Cameron International Corporation ("Cameron").
Modbus is a registered trademark of the Modbus Organization, Inc.
Windows is a registered trademark of Microsoft Corporation.
Acrobat Reader is a registered trademark of Adobe Systems Incorporated.

© 2008 Cameron International Corporation ("Cameron"). All information contained in this publication is confidential and proprietary property of Cameron. Any reproduction or use of these instructions, drawings, or photographs without the express written permission of an officer of Cameron is forbidden.

All Rights Reserved.
Printed in the United States of America.

Manual No. 9A-50165009, Rev. 02
September 2008

Contents

Section 1—Introduction **1**
Operation 1
Key Product Features 4
LCD Display 4
Keypad 5
Interface Software 6
Power Supply 6
Multipoint Linearization 7
Gas Volume Correction 7
Input Options 7
Output Options 7
Flow Log Archival 7
Event Log Archival 7
Password-Protected Security 7
Commonly Used Functions 8
Reading Totals 8
Saving Totals to Memory 8
Resetting the Total 8
Viewing Daily and Hourly Logs 8
Saving and Uploading Configuration Files 9
Exporting Log Data 9
Saving Log Data in a Report 9

Section 2—Installation **11**
Direct-Mount Installation 12
Remote-Mount Installation on Vertical Pipe 14
Remote-Mount Installation on Horizontal Pipe 15
Field Wiring Connections 17
Internal Power Supply 18
External Power Supply 18
Input Wiring 20
Turbine Flowmeter (TFM) Input 20
Pulse Input 20
Remote Reset Input 21
Output Wiring 22
Pulse Output 22
Analog (4-20 mA) Rate Output 22
Flowmeter Frequency Output 23
RS-485 Output 24

Section 3—Configuration and Operation via Keypad **27**
Entering a Calibration Factor 28
Entering a Calculated Divisor 29
Setting Input Type and Sensitivity 30
Configuring the Total Display 31
Configuring the Rate Display 32
Configuring the 4-20 mA Rate Output 33
Configuring the Pulse Output 36
Entering the Slave Address 37
Entering the Baud Rate 37

Section 4—Configuration and Operation via Software **39**
Installing the Software 39
Accessing Help 39
Connecting to the Software 40
Automating Functions on Software Startup 41
Changing Autorun Settings 42
Express Connect Option 42
Changing the Communications Port 43
Software Connection in Multi-Device Network 43
Setting Log Download Preferences 45
Configuring the MC-III WP 46
Configuration Wizard 48
MC-III Main Screen 50
Buttons and Tools 51
System Setup 54
Time/Date Synchronization 54
Contract Hour 54
LCD Contrast Adjustment 54
Security Setup 55
Firmware Version Number 55
Serial Number 55
Communications Port 56
Slave Address 56
Baud Rate 56
Bus Delay 57
Bus Timeout 57
Software Communication Options 57
Wellsite Information 58
Turbine Input 59
Volume Display 59
Rate Display 59
Input Type/Sensitivity Configuration 60
Cut-Off Thresholds 60
Calculation Period 60
K-Factor Entry 61
K-Factor Units 61
K-Factor Type 61
K-Factor Backup 62
Gas Volume Correction (Supercompressibility Calculation) 63
4-20 mA Output 65
Enabling 4-20 mA Output 67
4-20 mA Output Testing 67
Pulse Output 69
Configuring Pulse Output 69
Pulse Output Testing 70
Saving and Uploading Configuration Files 71
Saving a Configuration File 71
Uploading a Configuration File 72
Advanced Access 74

Section 5—Flow Logs and Event Logs 75
Auto-Save Log Formats 76
Log Directory and Filenames 76
Flow Archive 77
Downloading Flow Logs 77
Viewing Trend Charts 79
Printing/Saving a Report 79
Viewing a Saved Report 81
Exporting Flow Logs 83
Event Archive 84
Downloading Event Logs 85
Printing/Saving a Report 86
Exporting Event Logs 86

Section 6 - MC-III WP Maintenance 89
Lithium Battery Replacement 89
Alkaline Battery Replacement 90
Circuit Assembly Replacement 92
Keypad Replacement 95
Firmware Update 96
Optional Parts List 97
Recommended Magnetic Pickups 98

Appendix A—Software Program Options A-1
General Options A-1
Autorun Options A-2
Communications Options A-3
Express Connect Option A-3
Auto-Negotiate Option A-4
Enable Auto-Negotiated Baud Rate Option A-4
Request-to-Send (RTS) Line Option A-4
Enable Modbus Address Support for Firmware Versions 1.06 through 1.08 ..... A-4
Timing Parameters A-4
Downloading Options A-5
Advanced Options A-6
Clear EEPROM A-6
Automatic Data Logging A-6

Appendix B—Lithium Battery Information B-1
Lithium Battery Disposal B-1
Transportation Information B-1
Material Safety Data Sheet B-1

Appendix C—Communications Protocol C-1
Introduction C-1
Supported Commands C-1
Data Types C-1
Registers C-2
System Configuration C-3
Product Code (register 1000) C-4
Firmware/Register Table Version Numbers (registers 1001, 1002) C-4
Manufacture Date/Sales Date (registers 1003, 1004) C-4
Slave Address (register 1009) C-4

Baud Rate (register 1010) C-4
Real Time C-5
Input Configuration C-5
Output Configuration C-8
Holding Registers (16-bit Mode) C-9
Base Units/Configured Units C-11
Conversion Factors C-11
Polling Registers C-11
Pointer/Daily/Event Pointer (registers 17001 through 17006) C-11
Real Date (registers 17007, 17008) C-11
Real Time (registers 17009, 17010) C-12
Totals C-12
Pulse Output Pulses (register 17077) C-12
Analog Output Current (register 17079) C-12
Calculated K-Factor (register 17081) C-12
Holding Registers (32-bit Mode) C-12
Control Register C-14
Wellsite Parameters C-15
Log Data C-15
Enron Registers C-16
Enron Hourly/Daily Record Format C-16
Enron Event Record Format C-16
Reset Status C-17
Log Capacity C-17

Section 1—Introduction

The NuFlo™ MC-III™ WP Flow Analyzer (Figure 1.1) packs a full spectrum of gas and liquid measurement functionality, high-speed performance, and log archive and retrieval capabilities in an easy-to-use weatherproof totalizer. Commonly used operations can be accessed from the six-button keypad on the front of the instrument or from the dynamic interface software, allowing you to calibrate and configure the unit quickly and easily.

Operation

The MC-III WP calculates and displays instantaneous flow rates and accumulated totals based on a turbine flowmeter input signal. The MC-III's microprocessor circuitry counts the pulses generated by a companion flowmeter, converts that data into volume and rate values in accordance with calibration settings, and displays the totalized data on a two-line liquid crystal display (LCD). The eight-digit top readout indicates total flow volume; the six-digit bottom readout indicates flow rate.

With the press of a single key, totals are saved to nonvolatile memory, minimizing the risk of data loss even if a power outage occurs.

Up to 384 daily logs, 768 hourly logs, and 345 event logs can be archived and accessed quickly on demand.

Offering a variety of user-configurable display options, input and output options, RS-485 Modbus® compatibility, flow logging, and turbine flowmeter linearization, the MC-III WP is one of the most versatile totalizers on the market. For specifications, see *Table 1.1*, page 2.

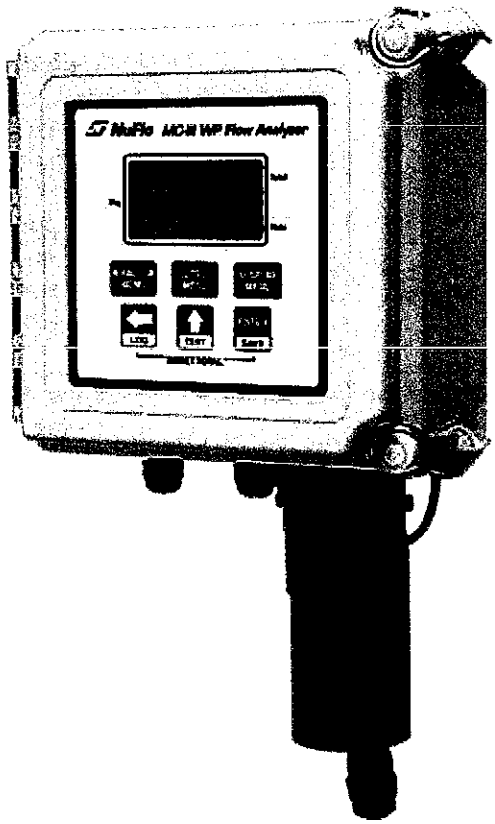

Figure 1.1—MC-III WP Flow Analyzer

Table 1.1—MC-III WP Specifications

Hazardous Location Certification	CSA-approved for US and Canada (if specified at time of order) Class I, Div. 2, Groups A, B, C, and D Rated for Internal Pollution Degree 2 CSA/UL Type 4 Enclosure (Ingress Protection) T5 Temperature Class
System Power	Internal power supply • 3.6 VDC, D-size lithium battery (2-year typical life) • alkaline battery holder containing 3 D-size batteries External power supply (6 to 30 VDC at 6 mA) with internal battery backup (reverse polarity protected) Loop-powered (4-20 mA) with internal battery backup (reverse polarity protected) Loop power: 8 to 30 VDC Load resistance: 1100 ohms @ 30 VDC 200 ohms @ 12 VDC
Operating Temperature	Lithium-Powered: -40°C to 70°C (-40°F to 158°F) Alkaline-Powered: -18°C to 55°C (0°F to 130°F) LCD contrast is reduced below -20°C (-4°F)
Environmental	Humidity: 0 to 90% non-condensing Altitude: Up to 2000 m, maximum
Enclosure	Molded fiberglass polyester, Lexan® polycarbonate viewing window 6.91 in. wide × 6.5 in. tall × 4.25 in. deep
LCD Display	8-digit Total (volume) display (7-segment characters) 6-digit Rate display (11-segment characters for easy-to-read prompts) 0.3" character height Adjustable contrast and update period User-selectable units of measurement (Total): • Preprogrammed units: BBL, GAL, LIT, M^3, CF, SCF, any unit x 1000 • User-defined units User-selectable units of measurement (Rate): • Preprogrammed units: BBL, GAL, LIT, M^3, CF, SCF (per DAY, HR, MIN, SEC), any unit x 1000 (per DAY, HR, MIN, SEC) • User-defined units
Keypad	6-key membrane switch
Communications/ Archive Retrieval	RS-485 Modbus® communications with transfer speeds up to 115.2K (allows full download in less than 1 minute)
Logging	384 daily logs 768 hourly logs 345 event logs

Table 1.1—MC-III WP Specifications

Inputs	Turbine Meter Input Configurable sensitivity adjustment via front panel Sensitivity adjustment range: 20 mV P-P to 40 mV P-P Frequency range: 0 to 3500 Hz Remote Reset Input Optically-isolated input 3.0 to 30 VDC Pulse duration > 3 seconds to reset Pulse Input Optically-isolated input 3.0 to 30 VDC
Outputs	Analog Output 4-20 mA, loop-powered (two-wire) 16-bit resolution Accuracy: 0.1% of full scale @ 25°C, 50 PPM/°C temperature drift Loop power: 8.0 to 30 VDC Zero and full-scale engineering values configurable from front panel RS-485 Communications Baud rates: 300, 600, 1200, 2400, 4800, 9600, 19200, 38400, 57600 and up to 115.2K Volumetric Pulse Output Solid-state relay Output rating: 60 mA max. @ 50 VDC, on-state drop = 1.4 VDC @ 50 mA, 0.25 VDC @ 10 mA Configurable pulse width (duration): 10 to 60,000 ms Amp & Square (Flowmeter Frequency) Output Open-drain transistor output of turbine meter input signal Output rating: 50 mA @ 30 VDC, on-state drop = 0.3 VDC @ 50 mA, 0.1 VDC @ 10 mA (Analog output and amp & square outputs cannot be used simultaneously.)
Modbus®	RTU mode Modbus® supports 16-bit and 32-bit holding registers. For more information, see *Appendix C*.
Enron Modbus®	Flow log parameters (time stamp, period total, period run time, and supply voltage) and download method are Enron-compatible.
System Requirements	Operating System - Windows 2000 or later (Windows XP recommended) Computer/Processor - 1 GHz or faster Pentium-compatible CPU Memory - 128 MB of RAM Hard Disk Space - 21 MB for program files, 30 MB for Adobe Reader, adequate space for data files Drive - CD-ROM for install Display - 800 x 600 (SVGA), 16-bit (thousands of colors) color display or greater Browser - Internet Explorer 4 or later Internet Connection - for web links, tech support Communications Port - physical or virtual RS-232 compatible serial port

WARNING

EXPLOSION HAZARD—SUBSTITUTION OF COMPONENTS AND/OR THE USE OF EQUIPMENT IN A MANNER OTHER THAN THAT SPECIFIED BY CAMERON MAY IMPAIR SUITABILITY FOR CLASS I, DIVISION 2. CAMERON BEARS NO LEGAL RESPONSIBILITY FOR THE PERFORMANCE OF A PRODUCT THAT HAS BEEN SERVICED OR REPAIRED WITH PARTS THAT ARE NOT AUTHORIZED BY CAMERON.

DO NOT DISCONNECT EQUIPMENT UNLESS POWER HAS BEEN SWITCHED OFF OR AREA IS KNOWN TO BE NON-HAZARDOUS.

DO NOT OPEN EQUIPMENT UNLESS SIGNAL CIRCUITS AND POWER HAVE BEEN SWITCHED OFF OR AREA IS KNOWN TO BE NON-HAZARDOUS.

BATTERIES MUST ONLY BE CHANGED IN AN AREA KNOWN TO BE NON-HAZARDOUS.

STATIC HAZARD. DO NOT CLEAN OR RUB ENCLOSURE UNLESS AREA IS KNOWN TO BE NON-HAZARDOUS.

Key Product Features

This section presents an overview of key features of the MC-III WP. Many of these features are discussed in more detail in *Sections 3* and *4* (configuration procedures) and Section 5 (flow log archival).

Key features discussed here include:

- LCD display
- keypad
- interface software
- power supply
- calibration options
- input options
- output options
- flow log archival
- password-protected security

LCD Display

The liquid crystal display (*Figure 1.2*, page 5) provides a simultaneous indication of accumulated total (top readout) and flow rate (bottom readout). The eight-digit total display uses 7-segment characters to form numbers and letters, which results in a combination of uppercase and lowercase letters. The six-digit flow rate display uses 11-segment characters to form numbers and letters for improved readability. When the keypad is used to calibrate the MC-III WP, the name of the menu option selected appears in the lower (rate) display, and settings are entered in the top (total) display.

Flow volume can be measured in barrels, gallons, liters, cubic meters, cubic feet, standard cubic feet or other user-defined units. A multiplication factor is also available for indicating flow volume in terms of 1,000 units. The unit of measure for the Total readout and the decimal point position are selected by the operator during calibration. If a user-defined unit is used, none of the preprogrammed volume units will be visible on the display during operation.

Flow rate can be measured in a wide variety of preprogrammed units, or other user-defined units. The flow

rate unit of measure is selected in two steps: (1) a volume unit is chosen and (2) a time-base unit (per day, per hour, per minute, or per second) is chosen. Users can choose any combination of preprogrammed volume and time units in establishing the flow rate engineering unit (for example, gallons per hour, gallons per day, or gallons per minute). Also, the volume unit used for the flow rate can be different from the volume unit used to read Total volume. The unit of measure for the Rate readout and the decimal point position are selected by the operator during calibration.

The daily index (Day) display is a two-digit number for selecting a daily archive log for viewing. The number shown here represents the number of days that have passed since the log was saved. For example, an entry of 01 would yield yesterday's log. An entry of 05 would yield the log generated 5 days ago. Up to 99 consecutive daily logs can be viewed using the keypad. In addition, up to 384 daily logs, 768 hourly logs, and 345 event logs can be viewed through the interface software.

The LCD contrast can be adjusted with the interface software (see *Section 4*).

Keypad

The six-button keypad allows users to perform a basic configuration of the instrument. *Figure 1.3*, page 6, summarizes the functions that can be accessed with each button. Most parameters can be configured in seconds by selecting one of the three menu keys (K-Factor, Output, or Display), navigating settings with the arrow buttons, and saving the selections with the Enter key.

Section 3 contains procedures for configuring the MC-III WP using the keypad. Icons of the six buttons provide a pictorial reference to help guide users through each step of configuration.

Important: Some configuration parameters are accessible only through the interface software. See *Section 4* for instructions on configuring the instrument using the software.

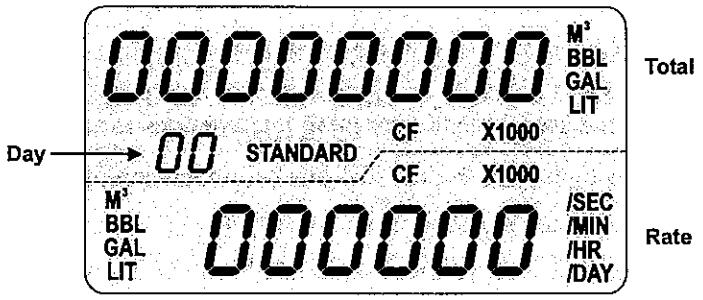

Figure 1.2—LCD display showing location of the Total, Rate, and daily index (Day) displays. Only the units of measurement selected for displaying total and rate will be visible during normal operation.

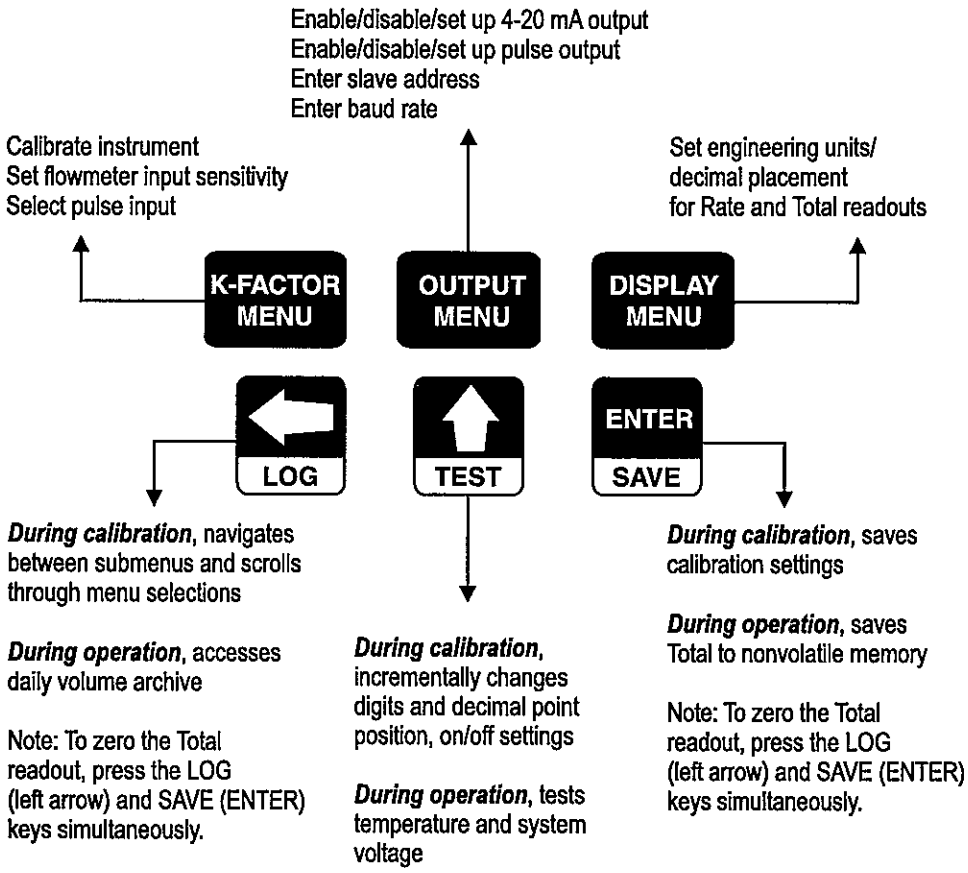

Figure 1.3—MC-III WP keypad functions

Interface Software

Developed within the familiar Windows environment, the MC-III interface software is an intuitive and easy-to-use application that provides access to all controls for setting up and operating the instrument. The interface tailors the controls to the user's needs, providing three options for configuring the instrument:

- a "Configuration Wizard," which steps through the most common configuration tasks
- individual configuration menus for accessing specific settings
- an advanced menu that gives host programmers access to Modbus® registers

For instructions on installing the interface software and entering configuration parameters via the interface software, see *Section 4*.

Power Supply

The MC-III WP is shipped with either a lithium battery or a battery holder containing three D-size alkaline batteries. Alternately, the MC-III WP may be powered by an external power source; in this case, the lithium battery or alkaline batteries provide a backup power supply, significantly extending battery service life. Low-power microprocessor technology enables the MC-III WP to operate approximately 2 years on a single lithium battery.

External Power Supply. The device will automatically switch to battery power when external power is lost. The external power supply must be an approved ELV source, insulated from the AC main by double/ reinforced insulation per CSA C22.2 No. 61010-1-04 / UL61010-1 – 2nd Edition.

Wiring diagrams for connecting an external power supply are provided in *Section 2*.

Multipoint Linearization

The MC-III interface software supports up to 12 calibration points in addition to single-point calibration based on the K-factor provided with the turbine flowmeter. See *K-Factor Type*, page 61, for more information.

Gas Volume Correction

Gas turbine meters are calibrated in actual cubic feet (ACF), and measure gas in actual cubic feet. In some applications, a user may benefit from referencing gas measurements back to standard conditions by measuring in terms of standard cubic feet (SCF). The MC-III WP makes this process quick and easy, by using fixed average values for the flowing gas temperature and flowing gas pressure. See *Gas Volume Correction*, page 63, for more information.

Input Options

The flowmeter signal can be obtained from a magnetic pickup or a pre-amplifier device. The sensitivity of the flowmeter input may be adjusted with the instrument keypad or the interface software. See *Section 2* for wiring diagrams. See *Sections 3* and *4* for configuration procedures.

Output Options

The MC-III WP standard circuitry provides:

- a scaled pulse output representing an increment in volume for each pulse
- a loop-powered 4-20 mA output representing the flow rate
- a flowmeter frequency output for use with remote equipment to derive flow rate and volume
- an RS-485 output for communication with interface software or other telemetry equipment

When the 4-20 mA rate output feature is used, the MC-III WP is powered by the current loop, and the lithium battery or alkaline batteries are used as a backup supply.

The pulse output and 4-20 mA output features should be turned off when not required for reduced current consumption. See *Section 2* for wiring diagrams. See *Sections 3* and *4* for configuration procedures.

Flow Log Archival

The MC-III WP saves up to 384 daily logs and 768 hourly logs in nonvolatile memory. By connecting with the interface software, users can download the logs for viewing and/or printing in tabular format or in a trend chart.

Users can also export daily and hourly logs to a spreadsheet. For more information, see *Section 5*.

Event Log Archival

The MC-III WP saves up to 345 user event logs. Event logs are generated to track user changes such as K-factor changes, input setting changes, power-on reset and "watch-dog" reset, flow cut-off and frequency cut-off.

By connecting with the interface software, users can download the logs for viewing and/or printing in tabular format. In addition to showing old and new values, each event log is time-stamped, and includes the register associated with the change. For more information, see *Section 5*.

Password-Protected Security

A keypad security access code prevents unauthorized personnel from altering the calibration or accumulated volume data in the instrument. The security feature may be disabled if this protection is not required.

Password-protected security access is enabled using the interface software. When this feature is enabled, the user will be prompted for a password when attempting to enter any menu from the keypad. For more information, see *Security Setup*, page 55.

Commonly Used Functions

While the functions of the MC-III WP are too numerous to mention, some of the most commonly used functions are detailed in this section. They include:

- reading the rate and accumulated total
- saving totals to memory
- resetting the total
- viewing daily and hourly logs
- saving and uploading configuration files
- exporting log data to spreadsheet
- saving log data in a report

Reading Totals

Current totals can be viewed from the LCD on the front of the MC-III WP or from the interface software (MC-III Main screen). The software calculates the flow total and updates the LCD display every 4 seconds, by default. The user can adjust the calculation period with the interface software. See *Calculation Period*, page 60, for more information.

Saving Totals to Memory

Hourly and daily totals are automatically saved to nonvolatile memory. A user may also save an accumulated total at any time by opening the enclosure and pressing ENTER (SAVE) on the keypad. In the event of a power failure, the last saved total will be displayed on the LCD when power is restored.

Important: Always save the accumulated total before replacing batteries.

Resetting the Total

Totals can be reset to zero using the keypad, the interface software, or a pulse from an external device.

- To reset the total with the keypad, press LEFT ARROW (LOG) and ENTER (SAVE) keys simultaneously.
- To reset the total with the interface software, double-click the MC-III icon on the computer desktop and wait for the software to connect to the instrument; then select MC-III Main from the Device Autorun Options screen, and click on the "Reset Flow Total" button in the lower right corner of the Main screen.

Viewing Daily and Hourly Logs

Each day, as the user-defined contract hour passes, a daily flow total is saved to nonvolatile memory. Hourly logs are also automatically saved. A total of 384 daily logs and 768 hourly logs are accessible for viewing and exporting using the interface software. See *Section 5* for details.

Up to 99 daily flow log totals can be viewed from the LCD. Hourly flow log totals are accessible only through the interface software.

To view daily flow totals from the LCD, perform the following steps:

1. Press the LEFT ARROW (LOG) key on the keypad. The words "Daily Volume Archive" will scroll across the bottom of the LCD and the day index will display "01." The daily flow total recorded at the last contract hour will appear at the top of the LCD.

   The index number represents the number of days previous to the current date. For example, yesterday's totals are read by entering an index of "01"; totals from two days previous are read by entering "02."

2. Press UP ARROW (TEST) to increment the index (01, 02, 03...); press LEFT ARROW (LOG) to decrement the index (01, 99, 98...).

3. Press Enter (Save) to exit the Daily Volume Archive menu. (After 2 minutes of inactivity, the Daily Volume Archive menu will time out and the total readout will be restored automatically.)

Saving and Uploading Configuration Files

The MC-III interface software allows users to save an unlimited number of configuration files to their computer. In the event that a configuration setting gets changed unintentionally or a user simply wants to restore the settings he used previously, the user can upload the configuration file and resume operation within minutes. The upload function also allows a configuration file to be loaded quickly into multiple devices. The default directory for saving configuration files is C:\NuFlo log data\MC-III. However, MC-III WP users can specify a different location, if desired.

For complete information, see *Saving and Uploading Configuration Files*, page 71.

Exporting Log Data

Flow logs and event logs can be directly exported to an .xls or .csv file. For complete information, see *Exporting Flow Logs*, page 83, and *Exporting Event Logs*, page 86. The default directory for exported logs is C:\NuFlo log data\MC-III. However, MC-III WP users can specify a different location, if desired.

Saving Log Data in a Report

Flow logs can be saved in a report format that can be loaded back into the software for viewing or printing at a later time. For complete information, see *Printing/Saving a Report*, page 79. The default directory for log reports is C:\NuFlo log data\MC-III\<WELL NAME>. However, MC-III WP users can specify a different location, if desired.

Section 2—Installation

The MC-III™ WP is fully assembled at the time of shipment and ready for mounting to a flowmeter. Instruments for direct-mount installation include an enclosure attached to a threaded mount (*Figure 2.1*, page 12). Remote-mount instruments come with mounting brackets and bolts for attaching the instrument to a vertical or horizontal pipe.

The MC-III™ WP is available in both a non-classified model for ordinary (safe) locations, and a CSA-approved model for hazardous locations. The hazardous-use model (*Figure 2.2*, page 12) is CSA-approved for Class I, Div. 2, Groups A, B, C, and D.

Important: Before installing the MC-III™ WP, read the Important Safety Information section on the inside cover of this manual.

Preparation

Before attempting to install the MC-III WP, make sure the flowmeter and magnetic pickup are installed as follows:

1. Install the turbine flowmeter in the flow line.
2. Lightly grease the threads on both ends of the magnetic pickup, taking care to keep grease off of the connector contacts. If the connector is plastic, apply grease only to the end that threads into the meter.
3. Install the magnetic pickup in the flowmeter.
4. After the flowmeter and magnetic pickup are installed in the flow line, mount the MC-III WP flow analyzer as described below.

Direct-Mount Installation

To install the MC-III WP on a turbine flowmeter, perform the following steps. Dimensions are provided in *Figure 2.3*, page 13.

1. Position the MC-III WP above the flowmeter.
2. Plug the MC-III WP cable connector into the magnetic pickup and hand-tighten the knurled nut on the connector.
3. Screw the MC-III WP mount onto the flowmeter threads surrounding the magnetic pickup.
4. With the display facing the desired direction, tighten the two screws on either side of the mount to prevent horizontal shifting.

With the display oriented vertically in the desired direction, tighten the two hex-head bolts on either side of the top section of the mount to prevent vertical shifting.

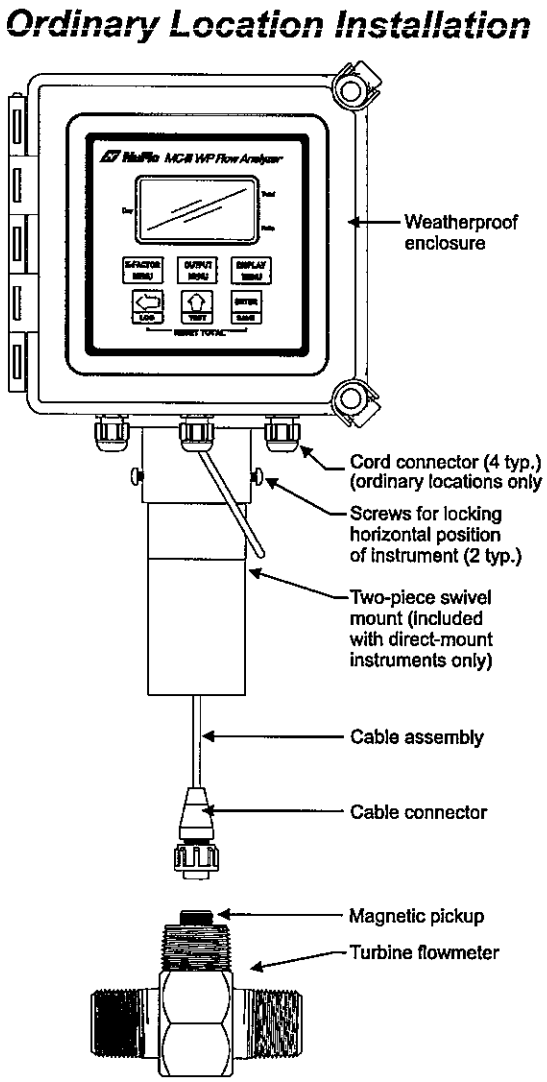

Figure 2.1—Connection of MC-III WP to flowmeter

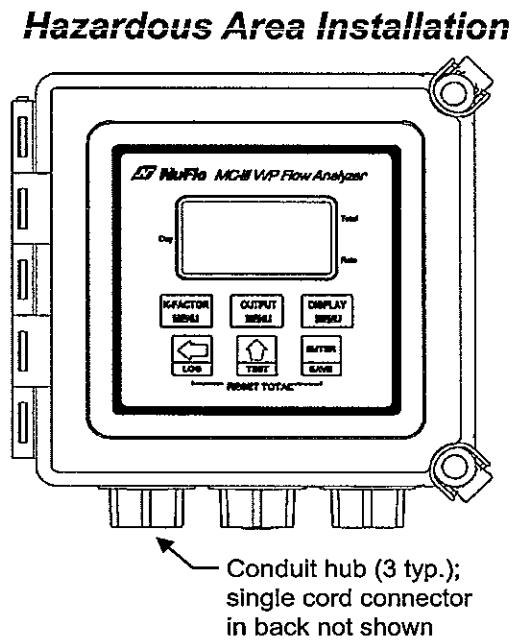

Figure 2.2—Only MC-III WP models that are constructed with conduit hubs may be used in hazardous areas.

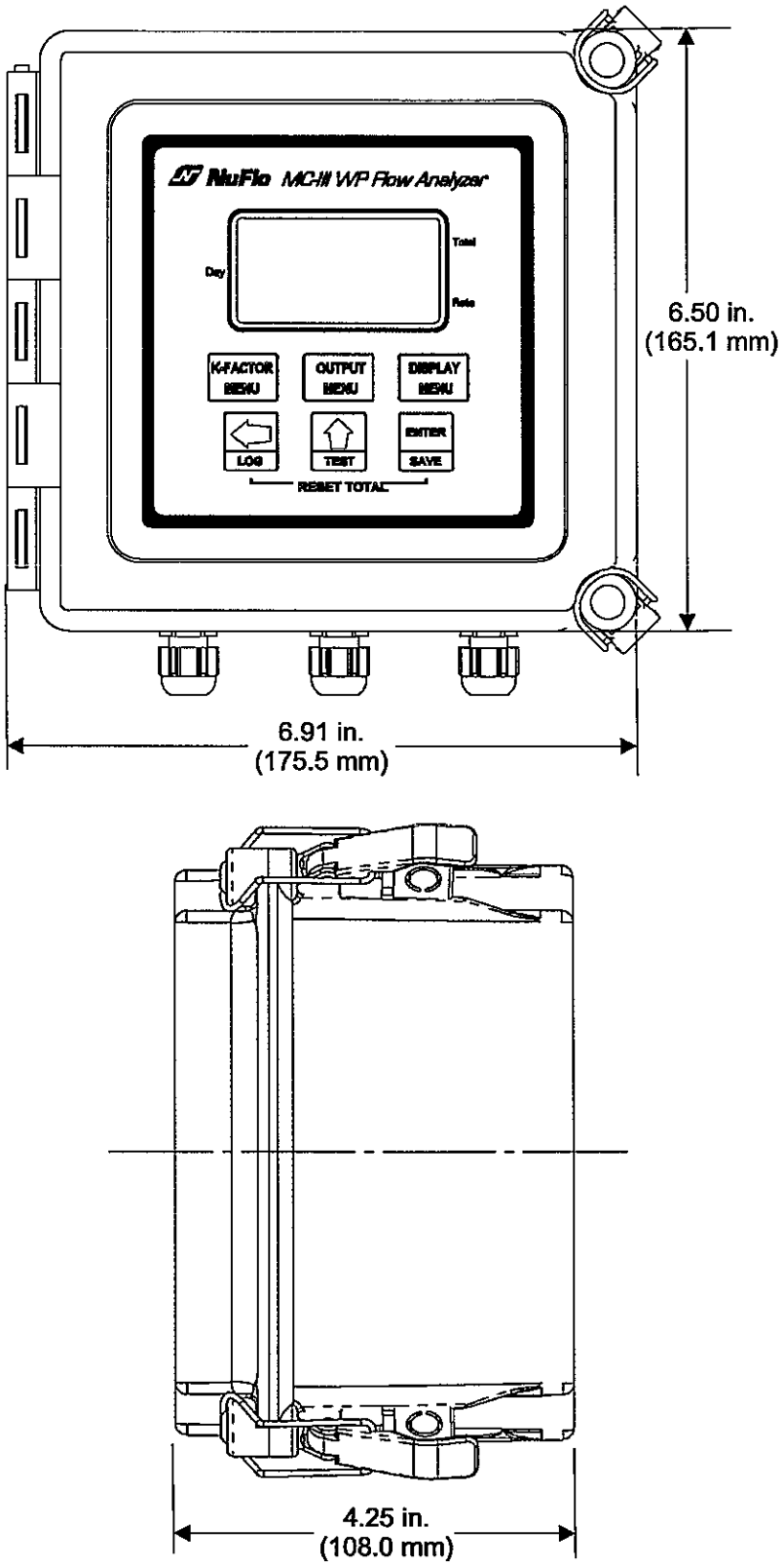

Figure 2.3—Typical mount dimensions in inches (millimeters) for direct-mount installation

Remote-Mount Installation on Vertical Pipe

The remote-mount MC-III WP Flow Analyzer is assembled at the factory for mounting on a vertical pipe. To install the MC-III WP on a vertical pipe, perform the following steps. Dimensions are provided in Figure 2.4.

1. Place the "U" bolts around the vertical pipe section and through the mounting plate.
2. Fasten the mounting plate with the lock washers and nuts supplied with the "U" bolts.
3. Install the signal cable through the rear cable connector at the bottom of the enclosure.
4. Route the cable to the flowmeter and install as shown in the flowmeter user manual.

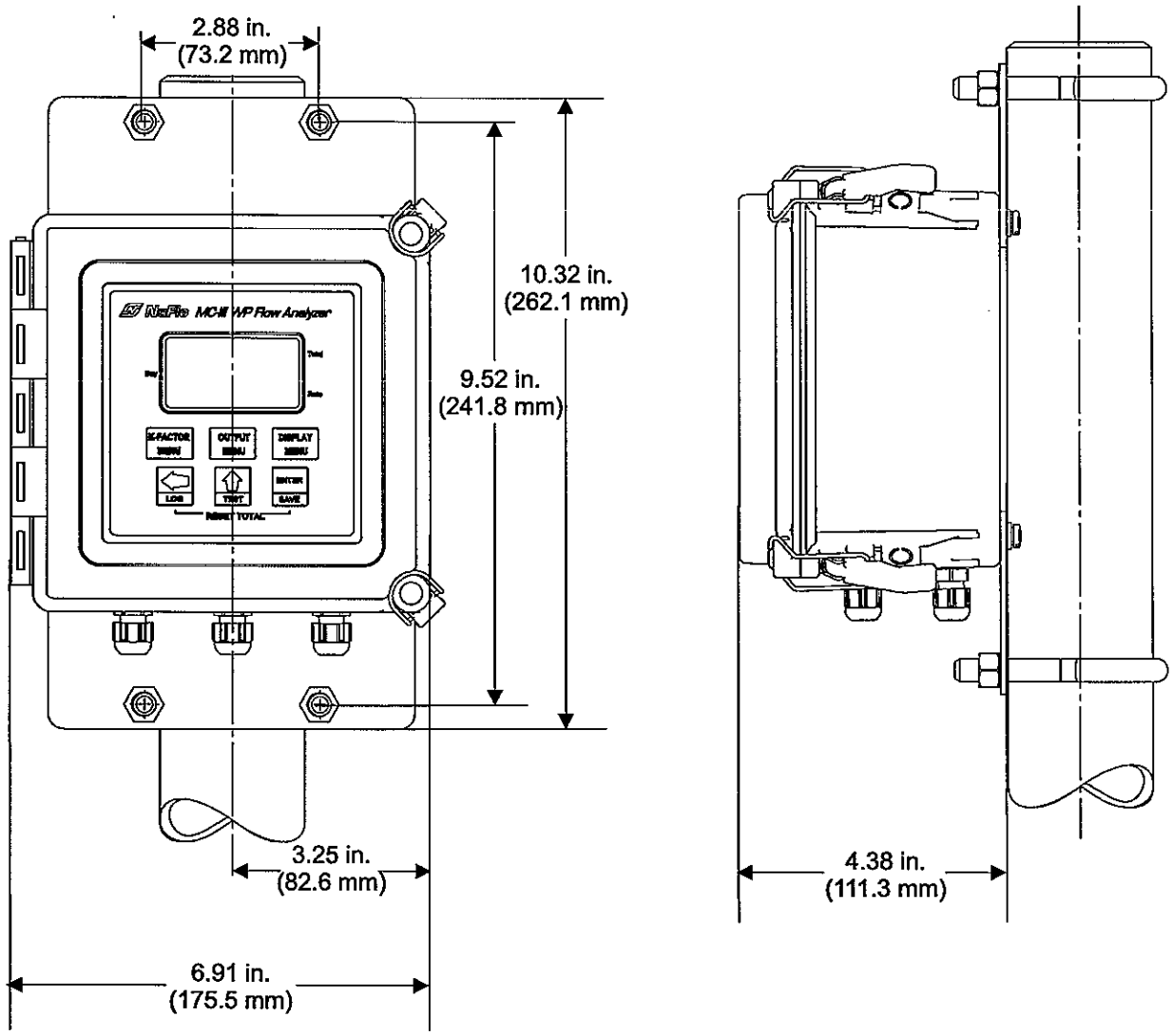

Figure 2.4—Typical mount dimensions in inches (millimeters) for remote-mount installation on vertical pipe

Remote-Mount Installation on Horizontal Pipe

The remote-mount MC-III WP Flow Analyzer is assembled at the factory for mounting on a vertical pipe. To install the MC-III WP on a horizontal pipe, the brackets must be removed and reattached in a different position. To make the adjustment, perform the following steps. Dimensions are provided in *Figure 2.6*, page 16.

1. Place the enclosure on its face and remove the four screws securing the brackets. Remove the brackets and set aside the eight spacer flat washers (two at each screw hole). Retain the screws and washers for use in steps 2 and 3. Note the two sets of mounting holes in the bracket. The screws are positioned in the holes nearest the center of the bracket (as appropriate for vertical mounting) when the instrument leaves the factory (Figure 2.5).
2. Dry-fit the brackets with the mounting holes in the enclosure so that a bracket extends to the right and left of the enclosure (as opposed to top and bottom). Using the washers that were removed in step 1, place two washers inside each screw hole inset in the enclosure and position the brackets on top of the washers so that the enclosure screw holes align with the *outer* holes of the bracket.
3. Insert the screws that were removed in step 1 in the *outer* holes of the bracket and tighten with a screwdriver (Figure 2.5).
4. Place the "U" bolts around the horizontal pipe section and through the mounting plate.
5. Fasten the mounting plate with the lock washers and nuts supplied with the "U" bolts.
6. Install the signal cable through the rear cable connector at the bottom of the enclosure.
7. Route the cable to the flowmeter and install as shown in the flowmeter user manual.

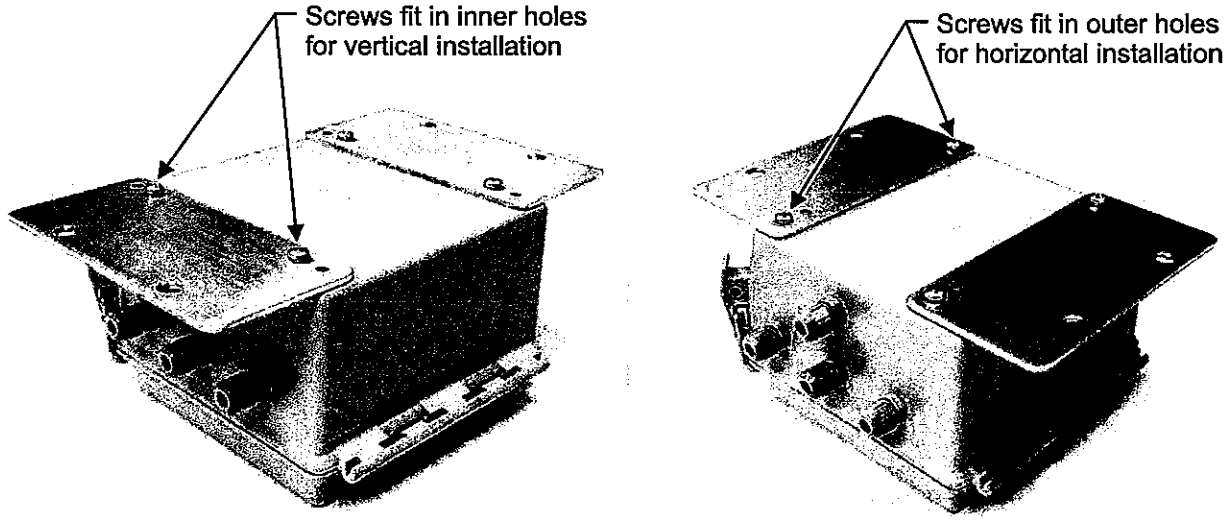

Figure 2.5—Conversion of brackets for mounting instrument to horizontal pipe

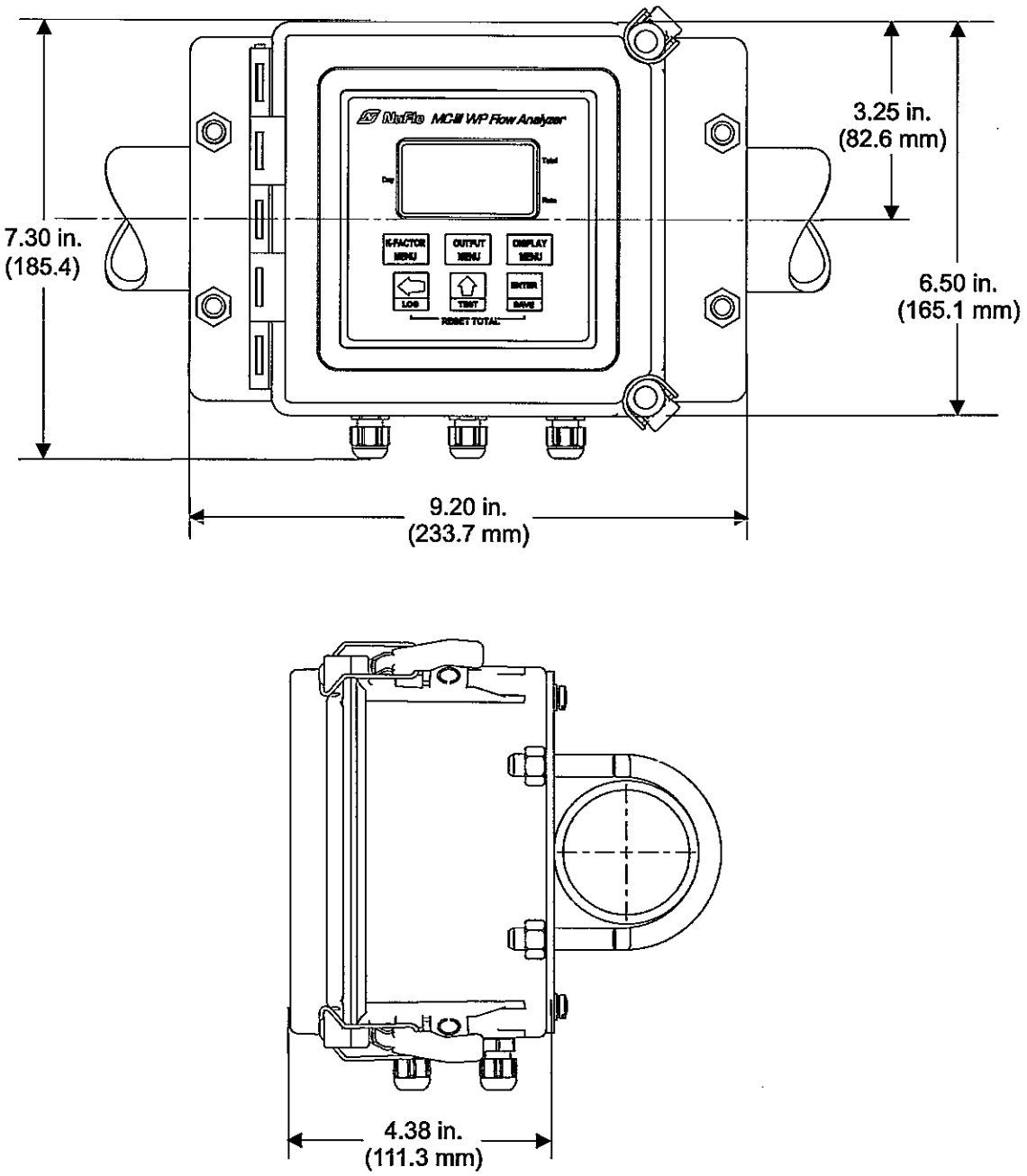

Figure 2.6—Typical mount dimensions in inches (millimeters) for remote-mount installation on horizontal pipe

Field Wiring Connections

All field wiring enters the MC-III WP through the bottom of the enclosure and connects to the circuit assembly inside the enclosure door. For instruments designed for use in ordinary locations, wiring is routed through three cord connectors. For instruments designed for use in hazardous locations, wiring is routed through three conduit hubs. In both cases, a rear cord connector is used for the magnetic pickup from the turbine meter.

Hazardous Area Precautions

WARNING

Do not attempt to install the battery or connect field wiring unless the area has been de-classified or is known to be non-hazardous.

Wiring Procedure

Caution: **All field wiring must conform to the National Electric Code, NFPA 70, Article 501-4(b) for installations within the United States or as specified in Section 18-156 of the Canadian Electrical Code for installations within Canada. Local wiring ordinances may also apply. All field wiring must have a wire range of 22 to 14 AWG and terminal block screws must be tightened to a minimum torque of 5 to 7 in-lbs. to secure the wiring within the terminal block. Only personnel who are experienced with field wiring should perform these procedures.**

The instrument must be grounded with a protective earth grounding conductor in accordance with national and local electrical codes. See step 3 of the wiring procedure below.

To wire the MC-III WP for operation, complete the following field connections:

1. Unlatch the door of the enclosure to access the circuit assembly mounted inside the door.
2. Connect the lithium battery or alkaline battery holder to the J1 connector on the circuit assembly.
3. Connect a ground wire to the internal ground connection screw located inside the enclosure. The screw is identified with the ground symbol, as shown in *Figure 2.7*, page 18. For DC-powered installations, route the protective earth grounding conductor into the enclosure with the incoming power conductors.
4. Connect wiring for external power, if appropriate. See *Figure 2.8*, page 19.
5. Connect the flowmeter or pulse input wiring to terminal block TB1. See *Figures 2.9 and 2.10*, page 20.
6. Connect wiring for the remote reset input to terminal block TB1, if appropriate. See *Figures 2.11 and 2.12*, page 21.
7. Connect wiring for output signals, if appropriate. See *Figures 2.13 through 2.18*, pages 22 through 25.
8. Recalibrate the MC-III WP (if necessary).
9. If external and internal power supplies were removed, reset the clock to ensure that the time stamps in the log data are accurate. The clock is reset using the MC-III interface software. See *Time/Date Synchronization*, page 54.
10. Replace the enclosure cover by threading it onto the enclosure in a clockwise direction.

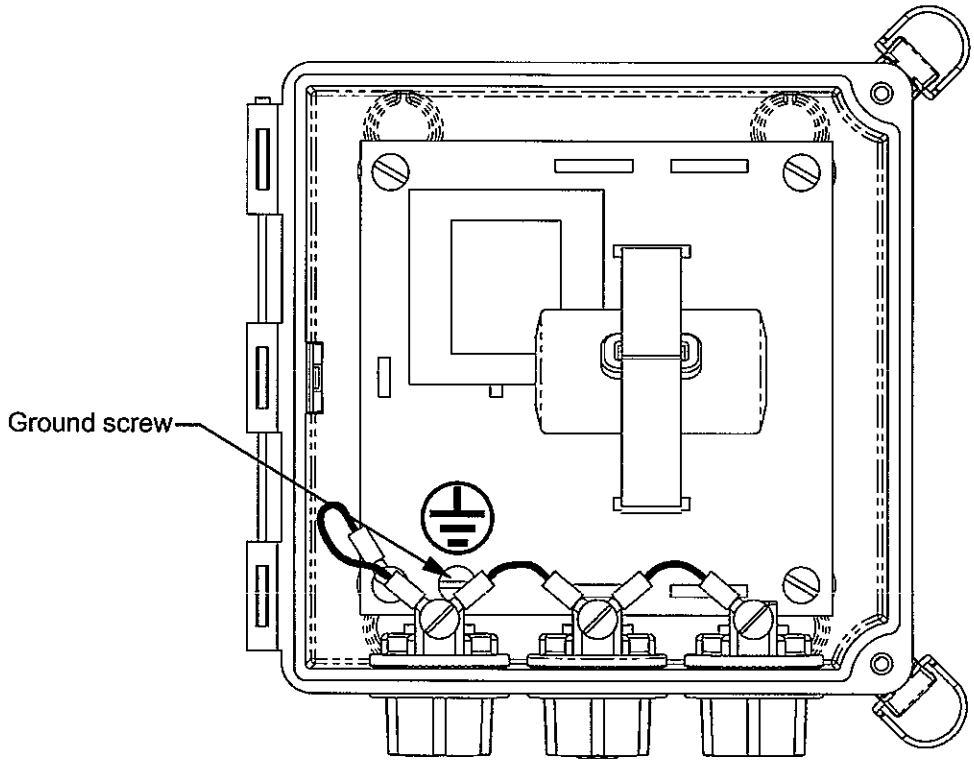

Figure 2.7—Ground connection screw (enclosure shown with door removed)

Power Supply Wiring

Internal Power Supply

The MC-III WP is shipped with either of two internal power supplies:

- a 3.6-V lithium battery or
- alkaline battery holder containing three D-size batteries

Low-power microprocessor technology enables the MC-III WP analyzer to operate approximately 2 years on a single lithium battery. The lithium battery is strongly recommended for use in extreme temperatures (below -20°C).

Users can power the instrument from an external power supply or a 4-20 mA current loop, and use the lithium or alkaline battery as a backup power supply. The use of an alternate power source extends battery life and helps ensure that timekeeping and volume accumulation will not be interrupted during a power failure.

External Power Supply

The MC-III WP can be connected to a remote power supply by a two-conductor cable (*Figure 2.8*, page 19). The power supply and cable must be capable of supplying 6 to 30 VDC @ 10 mA. This capability is available only if the 4-20 mA rate output is not used.

External Power Supply. The device will automatically switch to battery power when external power is lost. The external power supply must be an approved ELV source, insulated from the AC main by double/ reinforced insulation per CSA C22.2 No. 61010-1-04 / UL61010-1 – 2nd Edition.

Important: **In all applications using an external DC power supply, a protective over-current device rated at a 0.5A maximum (such as a circuit breaker or fuse) must be connected to the positive supply line of the DC power supply in the safe area. A recommended protective device is a 0.5-A ceramic fuse, such as the Bussman GDS-500mA or the Littelfuse 216.500.**

A disconnect switch must also be included in the safe area within easy reach of the operator, and clearly marked as the "disconnect" for the safe area external DC power supply.

Caution: **The instrument must be grounded with a protective earth grounding conductor in accordance with national and local electrical codes. To ground the instrument, connect a ground wire to the internal ground connection screw located inside the enclosure (*Figure 2.7*, page 18). For DC-powered installations, route the protective earth grounding conductor into the enclosure with the incoming power conductors.**

Caution: **When using the amp & square output with the external power supply, make sure the power supplies for both features share a common negative (-) terminal or that they are totally isolated from each other, since both share a common negative (-) connection.**

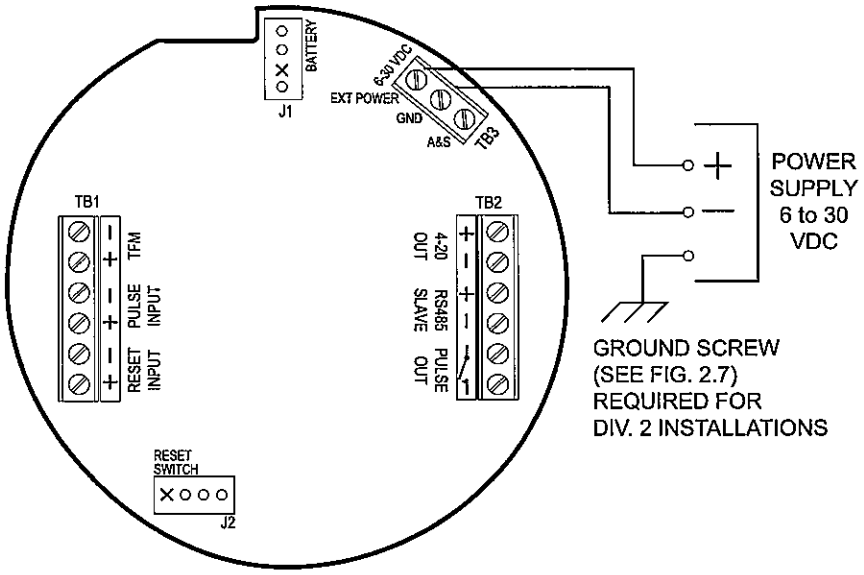

Figure 2.8—External power supply wiring

Input Wiring

WARNING

If installing the MC-III WP in a hazardous area, do not attempt to install input wiring unless the area has been declassified or is known to be non-hazardous.

Turbine Flowmeter (TFM) Input

The TFM input provides the turbine flowmeter input signal generated by a magnetic pickup, enabling the MC-III WP to calculate and display instantaneous flow rates and accumulated totals.

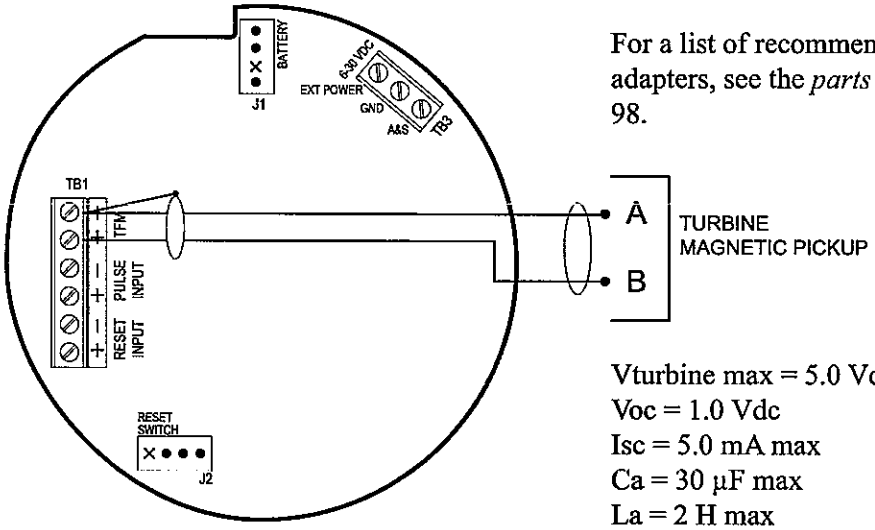

For a list of recommended pickup adapters, see the *parts list* on page 98.

Vturbine max = 5.0 Vdc or peak
Voc = 1.0 Vdc
Isc = 5.0 mA max
Ca = 30 µF max
La = 2 H max

Figure 2.9—Flowmeter input wiring

Pulse Input

The pulse input provides an optically isolated input in systems where a preamplifier is inserted between the sensor and the MC-III WP.

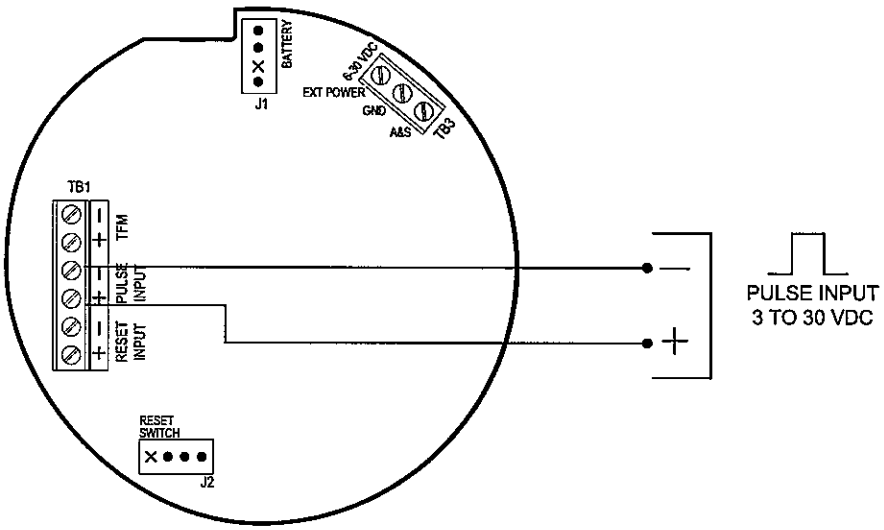

Figure 2.10—Pulse input wiring

Remote Reset Input

The remote reset input allows the operator to reset the accumulated volume on the MC-III WP to zero without opening the enclosure. This input is optically isolated. The input is shown connected in two ways, with a power supply and switch in a remote location (Figure 2.11), and with a pulse generator in a remote location (Figure 2.12).

The reset input or reset pulse must be active for 3 seconds to clear the total.

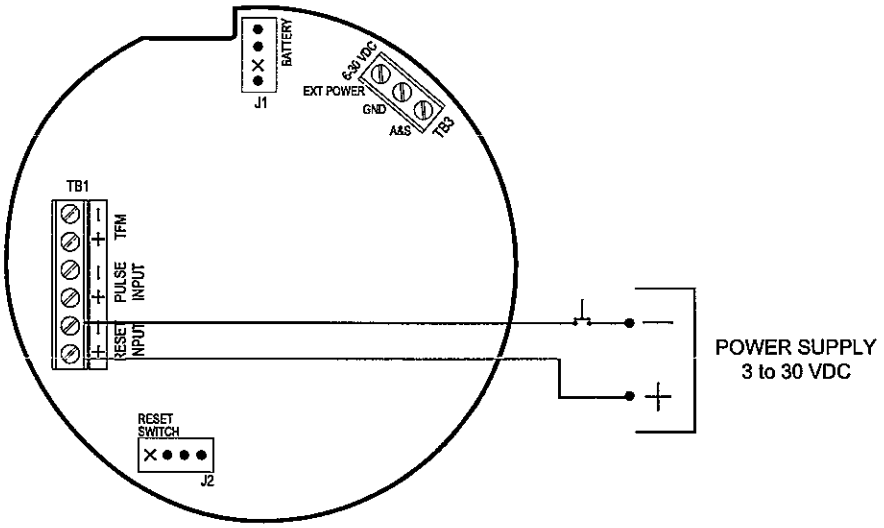

Figure 2.11—Reset input wiring (switch/power supply)

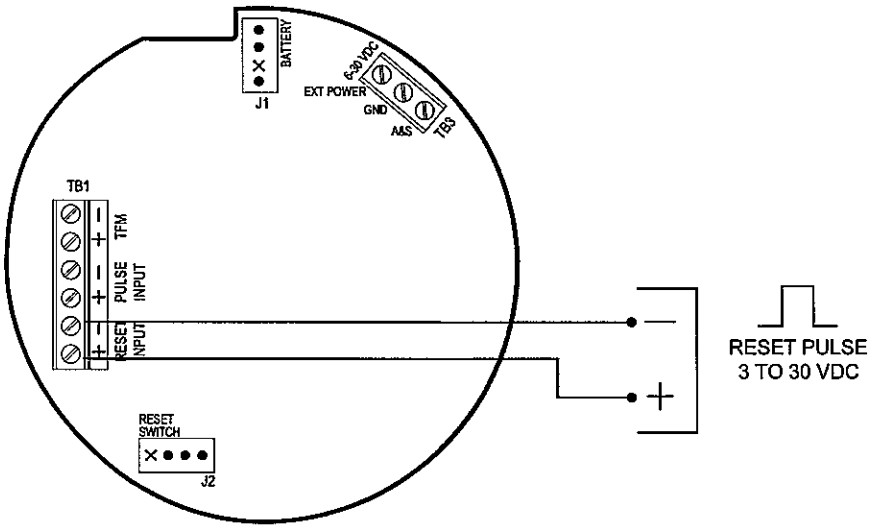

Figure 2.12—Reset input wiring (pulse)

Output Wiring

WARNING **If installing the MC-III WP in a hazardous area, do not attempt to install output wiring unless the area has been declassified or is known to be non-hazardous.**

The MC-III WP supports four outputs: pulse output, 4 to 20 mA output, flowmeter frequency (amp & square) output, and RS-485 output. Wiring diagrams for each feature are provided below.

Pulse Output

The pulse output is a solid-state relay. Each pulse represents a user-defined volume. Because the circuit is isolated, it can be used in conjunction with any other feature on the MC-III WP. A two-conductor cable from the MC-III WP to the remote location is required. The maximum current rating of the pulse output circuit is 60 mA at 50 VDC.

For information on configuring the pulse output with the keypad, see *page 36*. For information on configuring the pulse output with the interface software, see *page 69*.

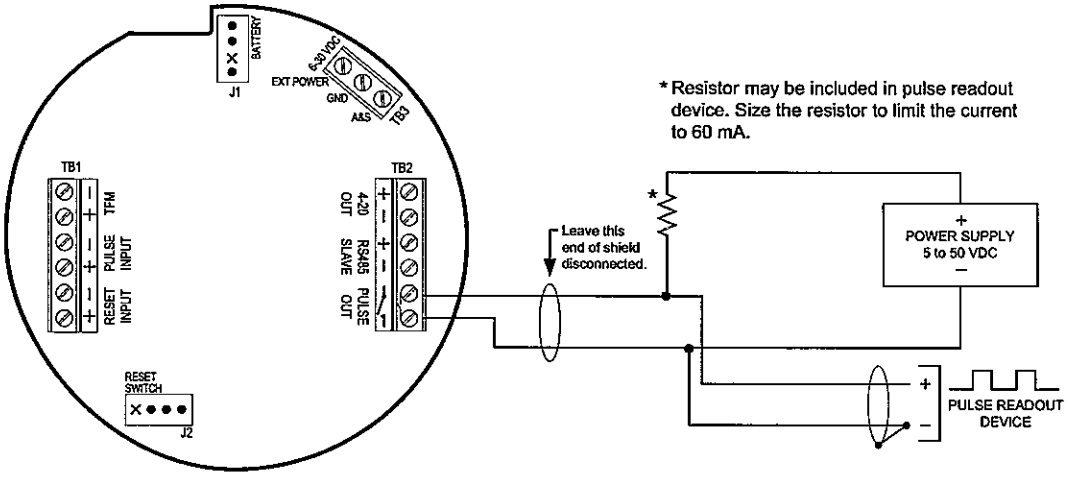

Figure 2.13—Pulse output wiring

Analog (4-20 mA) Rate Output

The 4-20 mA rate output provides a linear current output that represents flow rate. This output requires a two-conductor cable connected to an 8 to 30 VDC power supply (voltage required is dependent on loop resistance) and a current readout device located in the remote location. The 4-20 mA rate output current loop also powers the MC-III WP. The internal battery (lithium or alkaline) provides a power supply backup to maintain timekeeping accuracy and to continue accumulating volume in the event that the 4-20 mA current loop fails.

Figure 2.14, page 23 shows the minimum required voltage to power the instrument for a given loop resistance. In addition, the mathematical relationship between loop voltage and load resistance is given. For example, if a power supply voltage of 24 volts is available to power the current loop, the maximum load resistance would be 800 ohms.

Caution: **The 4-20 mA rate output and the flowmeter frequency output circuits are not isolated from each other and cannot be used simultaneously. When the 4-20 mA output option is used, do not connect external power to TB3.**

For information on configuring the 4-20 mA rate output with the keypad, see *page 33*. For information on configuring the 4-20 mA rate output with the interface software, see *page 65*.

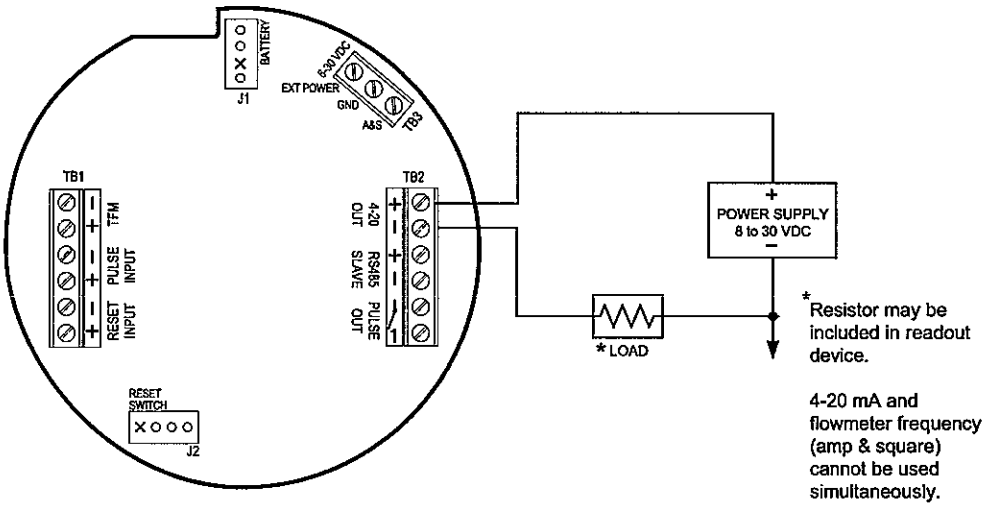

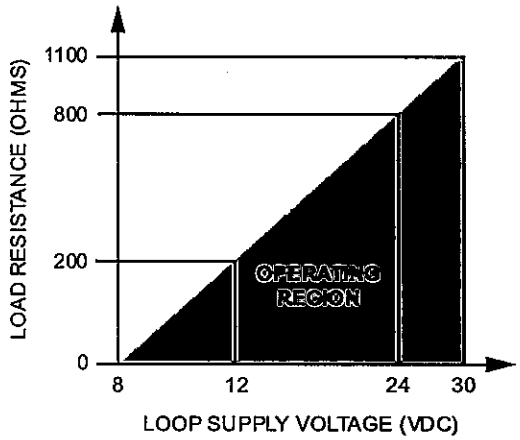

$$R_L\ MAX = \frac{(V\ loop - 8V)}{20\ mA}$$

$$R_L\ MAX = \frac{(24V\ loop - 8V)}{20\ mA}$$

$$R_L\ MAX = 800\ ohms$$

Figure 2.14—4-20 mA rate output wiring

Flowmeter Frequency Output

The flowmeter frequency (amp & square) output provides an open drain transistor output at the turbine meter frequency, which may be used to provide flow rate and/or total information to peripheral equipment. The output requires a two-conductor cable from the MC-III WP to the remote frequency readout device requiring 50 mA or less and a 5 to 30 VDC power supply (*Figure 2.15*, page 24).

Caution: **The flowmeter frequency output and 4-20 mA rate output are not isolated from each other and cannot be used simultaneously.**

Caution: **When using the flowmeter frequency output and powering the device from an external power supply, make sure both power supplies share a common negative (-) terminal or are totally isolated from each other.**

The flowmeter frequency output terminals on the MC-III WP circuit assembly are labeled A & S to represent "amp & square" output.

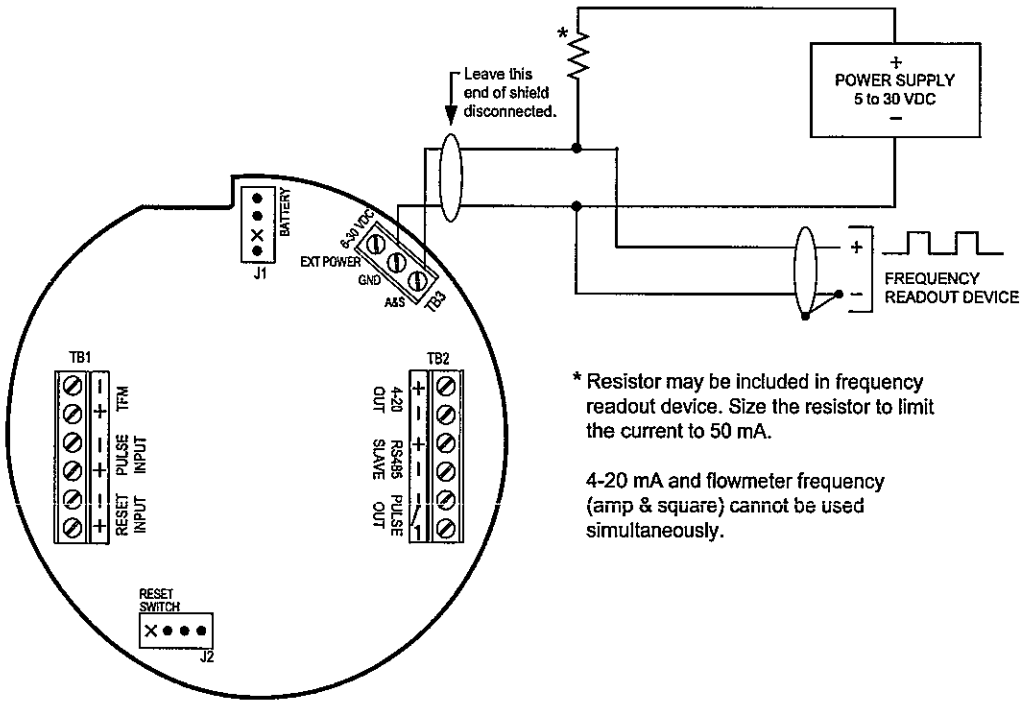

Figure 2.15—Flowmeter frequency (amp & square) output wiring

RS-485 Output

The RS-485 output is required for communication with the interface software. Wiring diagrams are provided for a permanent connection (Figure 2.16), as well as for temporary laptop connections using an RS-485 to RS-232 converter (*Figures 2.17 and 2.18*, page 25).

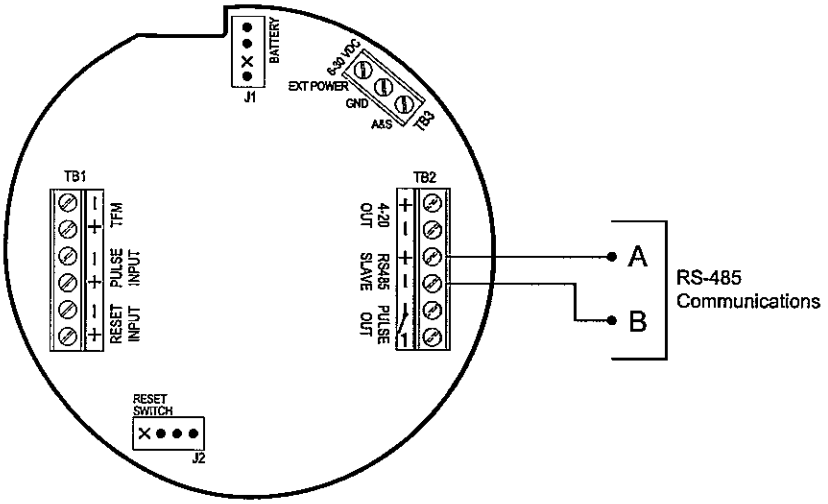

Figure 2.16—RS-485 output (permanent connection)

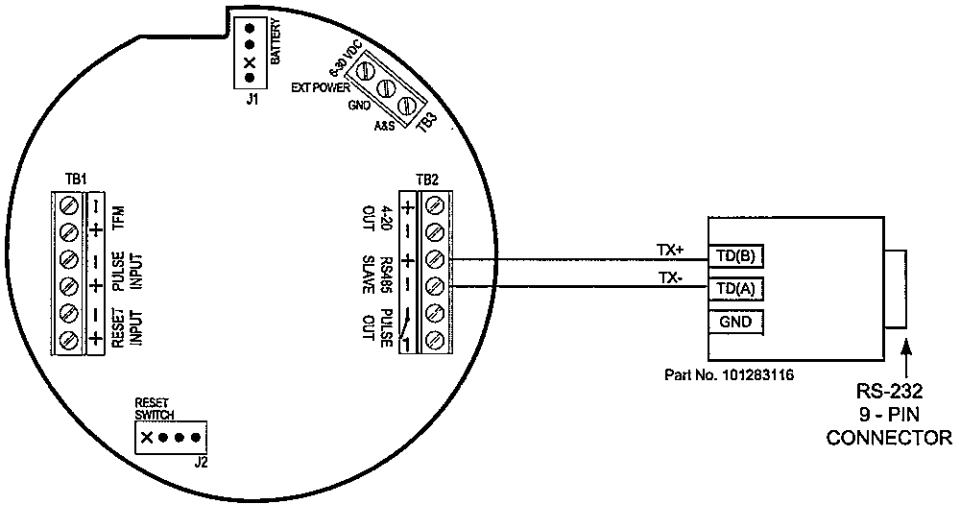

Figure 2.17—RS-485 output (connection to laptop with 9-pin converter)

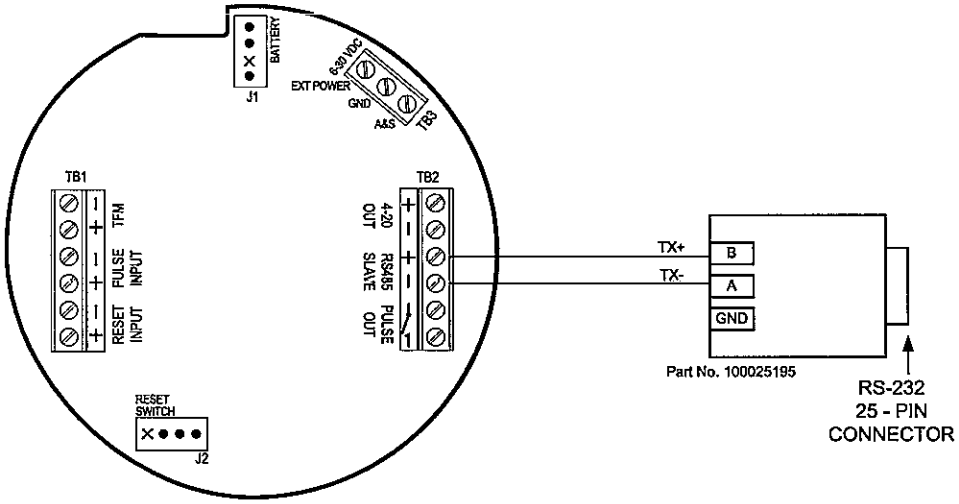

Figure 2.18—RS-485 output (connection to laptop with 25-pin converter)

Section 3—Configuration and Operation via Keypad

Calibration of the MC-III™ WP is a simple matter of entering necessary parameters into the instrument.

The process for calibrating the MC-III WP depends on how the instrument will be used. The keypad can be used to calibrate the MC-III WP for liquid or gas measurement using preprogrammed units, or for liquid measurement using a calculated divisor. When preprogrammed units are used, the MC-III WP automatically calculates the divisor for volume calculation and the rate multiplier for flow rate calculation, making calibration quick and easy.

Important: For compensated gas measurement, or gas or liquid measurement requiring multipoint (2- to 12-point) linearization, calibration must be performed with the software user interface (see *Section 4*).

The following parameters can be configured using the six-button keypad on the front of the instrument:

- calibration factor and unit
- units of measurement for Total and Rate displays
- decimal position for Total and Rate displays
- input type and sensitivity level
- 4-20 mA output
- pulse output scale factor
- slave address
- baud rate

Entering a Calibration Factor

When the volume is to be expressed in barrels (BBL), gallons (GAL), liters (LIT), cubic meters (M^3), or cubic feet (CF), and the flow rate is to be expressed in barrels, gallons, liters, cubic meters or cubic feet per day, per hour, per minute, or per second, the MC-III WP calculates the divisor automatically; only the turbine meter calibration factor is required.

When the volume is to be expressed in a unit other than the preprogrammed units listed above, a calculated divisor must be entered at the K-Factor prompt. See *Entering a Calculated Divisor*, page 29.

To Enter a Calibration Factor:

Enter the K-Factor menu.	Press K-FACTOR MENU.	K-FACTOR MENU	00000000 M³ BBL GAL LIT CF X1000 CF X1000 K-FACTOR
Select the unit of measure associated with the calibration factor (typically, pulses per gallon).	Press UP ARROW until the correct unit is displayed.	TEST	
Enter the decimal point position for the calibration factor.	Press LEFT ARROW to select the decimal point.	LOG	0000000.0 M³ BBL GAL LIT CF X1000 CF X1000 K-FACTOR
	Press UP ARROW to change the position of the decimal point.	TEST	
	Press LEFT ARROW to save the decimal point position and proceed with entering a calibration factor.	LOG	
Enter the calibration factor, starting with the last digit and entering digits right to left.	Press UP ARROW until the last digit of the calibration factor is displayed.	TEST	00000000 M³ BBL GAL LIT CF X1000 CF X1000 K-FACTOR
	Press LEFT ARROW to select the next digit to the left.	LOG	
	Repeat using UP and LEFT arrows to enter all remaining digits.		
	Press ENTER.	ENTER SAVE	

The Input Sensitivity menu will appear following the entry of the calibration factor. See *Setting Input Type and Sensitivity*, page 30, for the input sensitivity configuration procedure.

Entering a Calculated Divisor

When registering the volume in units other than cubic meters, cubic feet, barrels, gallons, or liters, a calculated divisor must be entered in the K-Factor menu instead of the turbine meter calibration factor.

Important: When a calculated divisor is used, the units for both the volume display and the volume portion of the flow rate display should be set to USER (no units visible on the display).

The divisor and divisor decimal point must be determined, then entered in the K-Factor menu.

The formula for calculating the divisor is:

Divisor = *FC* × *CON*

Where:

FC = meter factor in pulses per gallon (P/G)
CON = the conversion factor for number of gallons per unit volume of desired measure

To Enter a Calculated Divisor:

Enter the K-Factor menu.	Press K-FACTOR MENU.	K-FACTOR MENU	
Select no unit of measure.	Press UP ARROW until no unit is displayed (as shown).	TEST	00000000 M³ BBL GAL LIT CF X1000 CF X1000 K-FACTOR
Enter the decimal point position for the calculated divisor.	Press LEFT ARROW to select the decimal point. Press UP ARROW to change the position of the decimal point. Press LEFT ARROW to save the decimal point position and proceed with entering a calculated divisor.	LOG TEST LOG	00000000 M³ BBL GAL LIT CF X1000 CF X1000 K-FACTOR
Enter the calculated divisor, starting with the last digit and entering digits right to left.	Press UP ARROW until the last digit of the calculated divisor is displayed. Press LEFT ARROW to select the next digit to the left. Repeat using UP and LEFT arrows to enter all remaining digits. Press ENTER.	TEST LOG ENTER SAVE	00000000 M³ BBL GAL LIT CF X1000 CF X1000 K-FACTOR

The Input Sensitivity menu prompt will appear immediately following the entry of the calibration factor. See *Setting Input Type and Sensitivity*, page 30, for the input sensitivity configuration procedure.

Setting Input Type and Sensitivity

The flowmeter signal can be obtained from a magnetic pickup or a pre-amplifier device.

The input sensitivity of the MC-III WP is measured in millivolts (mV) peak-to-peak. This is the threshold value at which the circuitry responds to a signal. If the input signal is less than this value, the MC-III WP will not count the electrical pulses as a valid turbine meter signal. If the input signal is equal to or greater than this value, the electrical pulses received at the input will be counted. Care must be taken to ensure that the input sensitivity is high enough to reject any electrical noise on the signal line, but not so high that flowmeter pulses are missed. The input sensitivity of the MC-III WP may be set to low, medium, or high when the input will be provided by a turbine flowmeter.

If the input will be provided in the form of a pulse from a pre-amplifier or other device (rather than directly from a turbine flowmeter), the "Pulse In" (pulse input) setting in the Input Sensitivity menu should be selected.

See *Section 2* for input wiring diagrams.

To Set Input Type and Sensitivity:

Enter the K-Factor menu.	Press K-FACTOR MENU.	K-FACTOR MENU
Locate the input sensitivity setting.	Press ENTER, repeatedly if necessary, to bypass calibration factor. "INPUT SENSITIVITY" will scroll across the bottom display.	ENTER SAVE
If the input is the turbine meter, select a sensitivity setting: low, medium, or high. If the input is provided by a different device, such as a pre-amplifier, select "Pulse in" (for pulse input).	Press UP ARROW to select a sensitivity setting. Press ENTER. "SAVING" will appear in the bottom display.	TEST ENTER SAVE Select low, medium, high, or Pulse In Lo INPUT SE

Configuring the Total Display

The Total display can be configured for measuring volume in any of five preprogrammed units, any preprogrammed unit times 1,000, or a user-defined unit.

Users can specify a decimal point position, ranging from 0.1 to 0.0001 of a unit.

To Configure the Total Display:

Enter the Display menu.	Press DISPLAY MENU.	DISPLAY MENU
Select the unit of measure in which volume will be displayed.	Press UP ARROW until the correct unit is displayed. Note—If a calculated divisor was entered, select user-defined (no units visible).	TEST 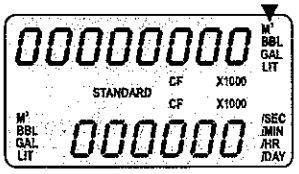
	To read the volume in terms of thousands of units (ex. 1.0 = 1,000 bbl), continue pressing UP ARROW until both the unit of choice and the X1000 option are displayed.	TEST 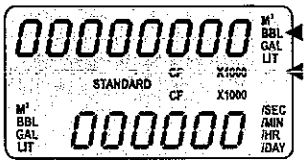
Enter the decimal point position.	Press LEFT ARROW three times, or until the decimal point in the Total display begins blinking.	LOG 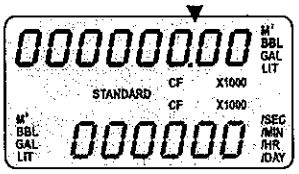
	Press UP ARROW to change the position of the decimal point.	TEST
	Press ENTER. "SAVING" will appear in the bottom display.	ENTER SAVE

Important: Before enabling or disabling the "× 1000" unit option for displaying flow totals, clear the total display to zero. If the total is not cleared, the accumulated total displayed will represent a combination of two different units and will not provide an accurate flow reading.

Configuring the Rate Display

The Rate display comprises two parts: a volume unit and a time-base unit. The volume portion of the Rate display can be configured in one of five preprogrammed engineering units or in a user-defined unit (for use with a calculated divisor). To display the volume portion in multiples of 1,000 units, continue scrolling through the volume unit options until the ×1000 entry is displayed, along with the appropriate unit of measure.

The time-base portion of the Rate display can be configured in one of four preprogrammed engineering units: per day, per hour, per minute, or per second.

Users can specify a decimal point position, ranging from no decimal up to 0.001 of a unit.

To Configure the Rate Display:

Enter the Display menu.	Press DISPLAY MENU.	DISPLAY MENU	
Enter the volume factor used to express flow rate (Ex.: bbl in bbl/day).	Press LEFT ARROW. The volume unit of measure in the bottom portion of the LCD window should begin blinking. Press UP ARROW until the desired volume unit of measure is displayed. Note—If a calculated divisor was entered, select user-defined (no units visible).	LOG TEST	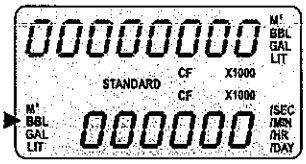
Enter the time-base factor used to express flow rate (Ex. /day in bbl/day).	Press LEFT ARROW. The time-base factor in the bottom portion of the LCD window should begin blinking. Press UP ARROW until the desired time-base factor is displayed.	LOG TEST	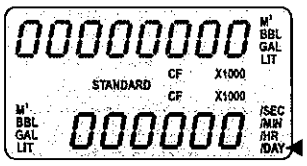
Enter the decimal point position.	Press LEFT ARROW twice, or until the decimal point in the Rate display begins blinking. Press UP ARROW to change the position of the decimal point. Press ENTER. "SAVING" will appear in the bottom display.	LOG TEST ENTER SAVE	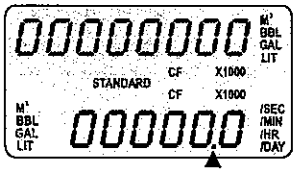

Configuring the 4-20 mA Rate Output

WARNING **Do not make or break any connections on the 4-20 mA current loop unless the area is known to be non-hazardous.**

Caution: **Before performing any 4-20 mA configuration, ensure that all peripheral equipment connected to the 4-20 mA current loop is either disconnected or disabled. Configuring and testing the 4-20 mA output feature on the MC-III WP with the peripheral equipment in operation may cause false alarms or erroneous operation of the peripheral device or associated equipment.**

The MC-III WP has a 4-20 mA output feature that represents flow rate. Zero and full-scale values can be configured to represent any flow rate range within the range of the flowmeter.

The low (or zero) setting is the flow rate value that will produce a 4-mA output. The high (or full-scale) setting is the flow rate value that will produce a 20-mA output. Typically, the high value is greater than the low value; this scenario is defined as "direct mode" in Figure 3.1.

Alternatively, users may configure the 4-mA and 20-mA outputs to have an inverse relationship, such that the high value is less than the low value. This scenario is defined as "indirect mode" in Figure 3.1.

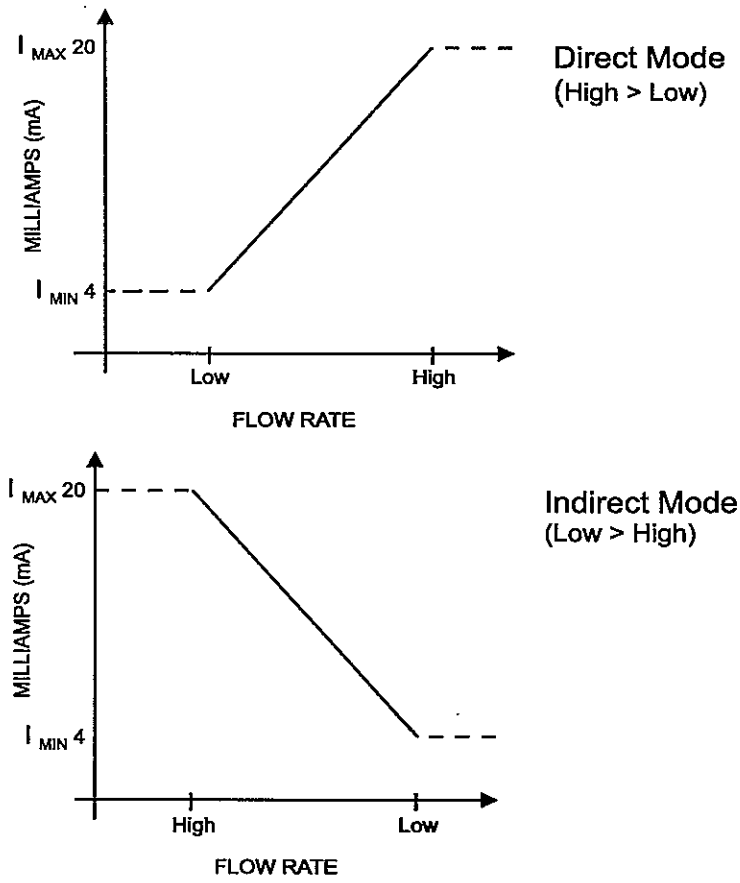

Figure 3.1—Two options for configuring a 4-20 mA output

See *Section 2* for instructions on installing and wiring the 4-20 mA rate output.

Flow rates in-between the minimum and maximum rate setpoints will result in an output of current between 4 mA and 20 mA according to the following calculation:

$$I_{OUT} = \frac{[I_{MAX} - I_{MIN}]}{High - Low} \times [RATE_{CURR} - Low] + I_{MIN}$$

Where:

I_{OUT} = output current

I_{MAX} = maximum current output (20 mA)

I_{MIN} = minimum current output (4 mA)

High = programmed flow rate that produces a 20-mA output

Low = programmed flow rate that produces a 4-mA output

$RATE_{CURR}$ = flow rate

To Configure the 4-20 mA Output:

Enter the Output menu.	Press OUTPUT MENU.	OUTPUT MENU
Enable or disable the 4-20 mA output.	Press UP ARROW to toggle output to "on" or "off". Press ENTER. If the 4-20 mA output is enabled, the LCD will display the "Low" flow rate and the decimal point in the numeric display will begin blinking.	TEST ENTER SAVE Toggles between "off" and "on" oFF 4-20 mA
Enter the decimal point position for the "Low" flow rate. The words "4-20 mA LOW" should appear at the bottom of the LCD.	Press UP ARROW to change the position of the decimal point.	TEST 00000000 CF 4-20 mA LOW MIN
Enter the "Low" (4-mA) flow rate. Digits are entered from right to left.	Press LEFT ARROW until the rightmost digit in the top display begins blinking. Press UP ARROW to change the digit. Press LEFT ARROW to select the next digit to the left. Continue pressing UP ARROW and LEFT ARROW alternately to enter all remaining digits. Press ENTER. The LCD will display the "High" flow rate and the decimal point in the numeric display will begin blinking.	LOG TEST LOG ENTER SAVE 00000000 CF 4-20 mA LOW MIN
Enter the decimal point position for the "High" flow rate. The words "4-20 mA HIGH" should appear at the bottom of the LCD.	Press UP ARROW to change the position of the decimal point.	TEST 00000000 CF 4-20 mA HIGH MIN
Enter the "High" (20-mA) flow rate. Digits are entered from right to left.	Press LEFT ARROW until the rightmost digit in the top display begins blinking. Press UP ARROW to change the digit. Press LEFT ARROW to select the next digit to the left. Continue pressing UP ARROW and LEFT ARROW alternately to enter all remaining digits. Press ENTER.	LOG TEST LOG ENTER SAVE 00000000 CF 4-20 mA HIGH MIN

The Pulse Output menu prompt will appear immediately following the entry of 4-20 mA parameters. See *Configuring the Pulse Output*, page 36, for the pulse output configuration procedure.

Configuring the Pulse Output

The pulse output feature of the MC-III WP is typically disabled to reduce current consumption. When the pulse output is not needed, Cameron recommends that this feature be disabled.

If the pulse output feature is required, the user will be prompted to enter a pulse output scale factor, which is the volume increment that will cause a pulse output to occur.

If the pulse output is configured via interface software instead of via the keypad Output menu, the user can also specify a pulse length (pulse width), which determines the length of each output pulse in milliseconds (ms). This parameter is configurable only with the interface software. See *Section 4* for more information.

See *Section 2* for instructions on installation and field wiring of the pulse output feature.

To Configure the Pulse Output:

Enter the Output menu.	Press OUTPUT MENU.	OUTPUT MENU
Locate the Pulse Output setting.	Press ENTER repeatedly until the words "Pulse Output" appear in the lower display.	ENTER SAVE
Enable or disable the pulse output.	Press UP ARROW to toggle output to "on" or "off". Press ENTER. If the pulse output is enabled, the LCD will display "Pulse Output Scaler" and the decimal point in the numeric display will begin blinking.	TEST ENTER SAVE Toggles between "off" and "on" oFF PULSE OU
Enter the decimal point position for the output scale factor.	Press UP ARROW to change the position of the decimal point.	TEST 00000000 M³ BBL GAL LIT CF X1000 ...SCALER
Enter the pulse output scale factor. Digits are entered from right to left.	Press LEFT ARROW until the rightmost digit in the top display begins blinking. Press UP ARROW to change the digit. Press LEFT ARROW to select the next digit to the left. Repeat using UP and LEFT arrows to enter all remaining digits. Press ENTER.	LOG TEST LOG ENTER SAVE 00000000 M³ BBL GAL LIT CF X1000 ...SCALER

The Slave Address menu prompt will appear immediately following the entry of pulse output parameters. See *Entering the Slave Address*, page 37, for information on entering the slave address.

Entering the Slave Address

The slave address is a setting used in Modbus® communications. It is a number that ranges from 1 to 65535, excluding 252 to 255 and 64764. If the Modbus® request message contains the matching address, the device will respond to the request. In network arrangements, the device must have a unique slave address. For more information about Modbus® communications, refer to the protocol manual section. If Modbus® communications are not used, leave the slave address at the factory setting (1).

To Enter Slave Address:

Enter the Output menu.	Press OUTPUT MENU.	OUTPUT MENU
Locate the Slave Address setting.	Press ENTER repeatedly until the words "Slave Address" appear in the lower display. The rightmost digit in the top display will begin blinking.	ENTER SAVE 00000000 SLAVE AD...
Enter the Slave Address. (range: 1 to 65535, excluding 252 to 255 and 64764)	Press UP ARROW until the correct digit is displayed. Then press LEFT ARROW to select the next digit to the left. Repeat using UP and LEFT arrows to enter all remaining digits. Press ENTER.	TEST LOG ENTER SAVE

The Baud Rate menu prompt will appear immediately following the entry of the slave address. See *Entering the Baud Rate* below for the baud rate entry procedure.

Entering the Baud Rate

The baud rate is the number of bits per second that are on the serial port. This setting must match the setting of the master device polling the MC-III WP or the serial port. This only applies to the Modbus® communications; if Modbus® communications are not used, leave the baud rate at the factory setting (9600).

To Enter the Baud Rate:

Enter the Output menu.	Press OUTPUT MENU.	OUTPUT MENU
Locate the Baud Rate setting.	Press ENTER repeatedly until the words "Baud Rate" appear in the lower display.	ENTER SAVE 115200 bAUD RATE
Enter the baud rate.	Press UP ARROW until the correct baud rate is displayed. Press ENTER. "SAVING" will appear in the bottom display.	TEST ENTER SAVE

Section 4—Configuration and Operation via Software

The MC-III™ interface software provides easy access to all configuration parameters and is the quickest way to configure the device. Instead of navigating keypad menus, users enter configuration parameters with their computer keyboard.

While basic parameters can be configured with the keypad (see *Section 3*), the interface software is the only means of accessing every configurable parameter. For example, multipoint calibration for liquid or gas measurement and gas volume correction parameters for measuring gas in standard cubic feet must be configured via the interface software.

Table 4.1, page 49, provides a quick reference for determining whether a configurable parameter is accessible through both the keypad menu and the interface software, or only through the interface software.

Installing the Software

The MC-III interface software is stored on a CD that is shipped with each instrument, and it installs directly onto a PC or laptop. To install the interface software on a computer, perform the following steps:

1. Place the MC-III CD in your CD-ROM drive.
2. The MC-III install screen will load automatically.
3. Click on "Next" to initiate the installation, and follow the instructions on the screen. An MC-III icon (Figure 4.1) will appear on the desktop of the user's PC or laptop when installation is complete.

To access the interface software, click on the MC-III icon on your desktop or go the Start menu and select Programs>NuFlo>MC-III>MC-III.

Figure 4.1—MC-III desktop icon

Accessing Help

The Help menu, accessible from the task bar at the top of the Welcome screen (*Figure 4.2*, page 40), provides access to documentation designed to assist the user in installing, configuring, and operating the MC-III WP flow analyzer. This documentation includes:

- a "read me" file for general reference (includes contact information for technical assistance)
- an electronic copy of the user manual
- an electronic copy of the quick-start guide for installing and configuring the MC-III WP
- a COM troubleshooting guide for addressing communications errors (this guide will automatically display on screen when a communication error is detected)

The manuals can also be downloaded from Cameron's Measurement Systems Division website, *www.c-a-m.com/flo*.

Connecting to the Software

Important: Before attempting to load the interface software, verify that the MC-III WP is connected to a computer with an RS-485 to RS-232 converter (see *Optional Parts List*, **page 97). See** *Section 2* **for RS-485 output wiring diagrams (***Figures 2.16 through 2.18*, **pages 24 and 25).**

Once the software is installed, the program will automatically launch with the click of the NuFlo MC-III icon on the desktop.

To connect to the MC-III software, perform the following steps:

1. Click on the NuFlo MC-III icon on the desktop, or select Start>Programs>NuFlo>MC-III>MC-III. The Welcome screen (Figure 4.2) will appear and a Select COM Port window will prompt the user to select a communications port be used for connecting with the MC-III WP (Figure 4.2).
2. Select a communications port from the dropdown list and click "OK." The software will attempt to connect with the MC-III WP (via an RS-485 to RS-232 converter). This automatic launch feature is referred to as an "express connect."
3. If the internal time and date programmed into the instrument differs from the time and date displayed on the computer by more than 60 seconds, the software will prompt the user to synchronize the instrument time/date to match the computer time/date (*Figure 4.3*, page 41). This ensures that the instrument displays correct time, regardless of time zone differences.

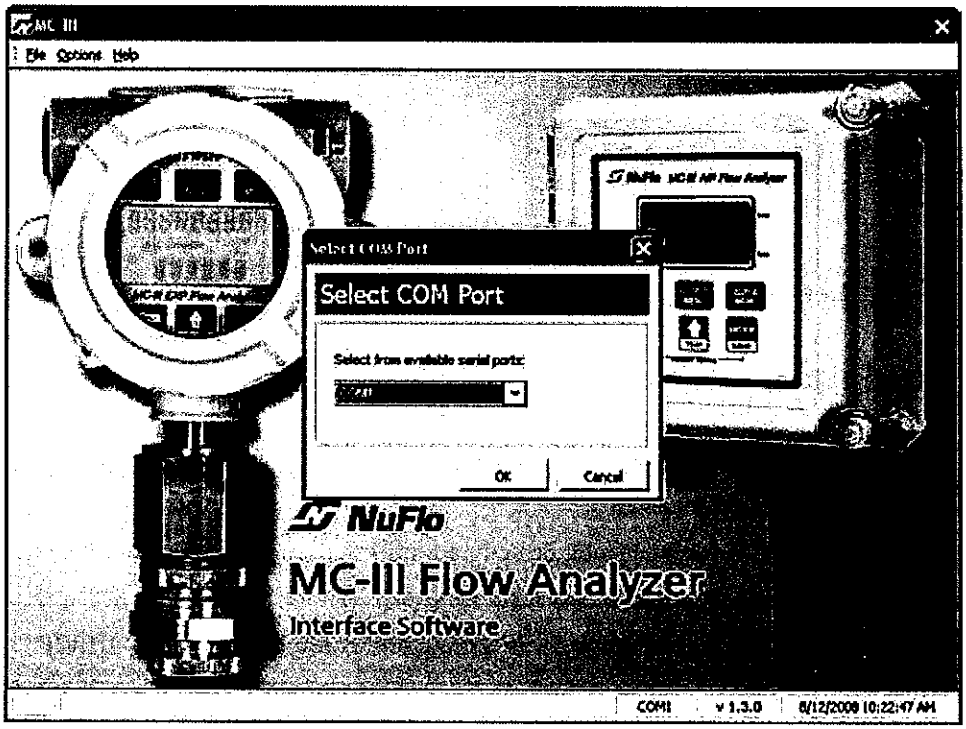

Figure 4.2—Select COM Port window

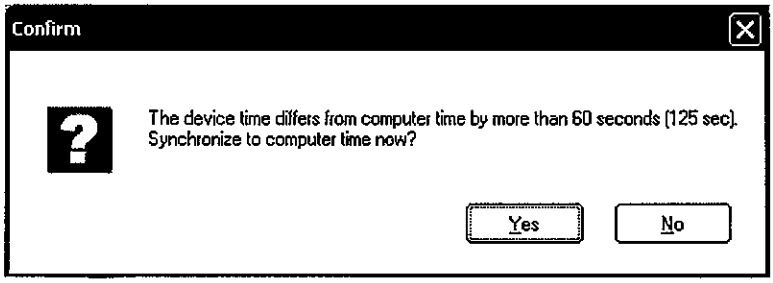

Figure 4.3—Prompt for authorizing time and date synchronization

The time difference setting used to generate a synchronize prompt is user-configurable. For more information, see *General Options*, page A-1.

Automating Functions on Software Startup

When the software connects with the instrument, the Device Autorun Options screen appears (Figure 4.4). From this screen, users can configure the instrument, download logs, or upload previously saved configuration settings.

A checkbox at the bottom of the Device Autorun Options screen allows the user to bypass the Device Autorun Options screen and perform a selected function each time the software connects to the instrument.

Example: To download all logs on connection, select Download all logs from the Device Autorun Options screen and check the "Always do..." checkbox. Each time the software computer connects to the instrument, the software will bypass the Device Autorun Options screen, open the Flow Archive screen, and download all logs. See *Section 5* for more information on flow logs.

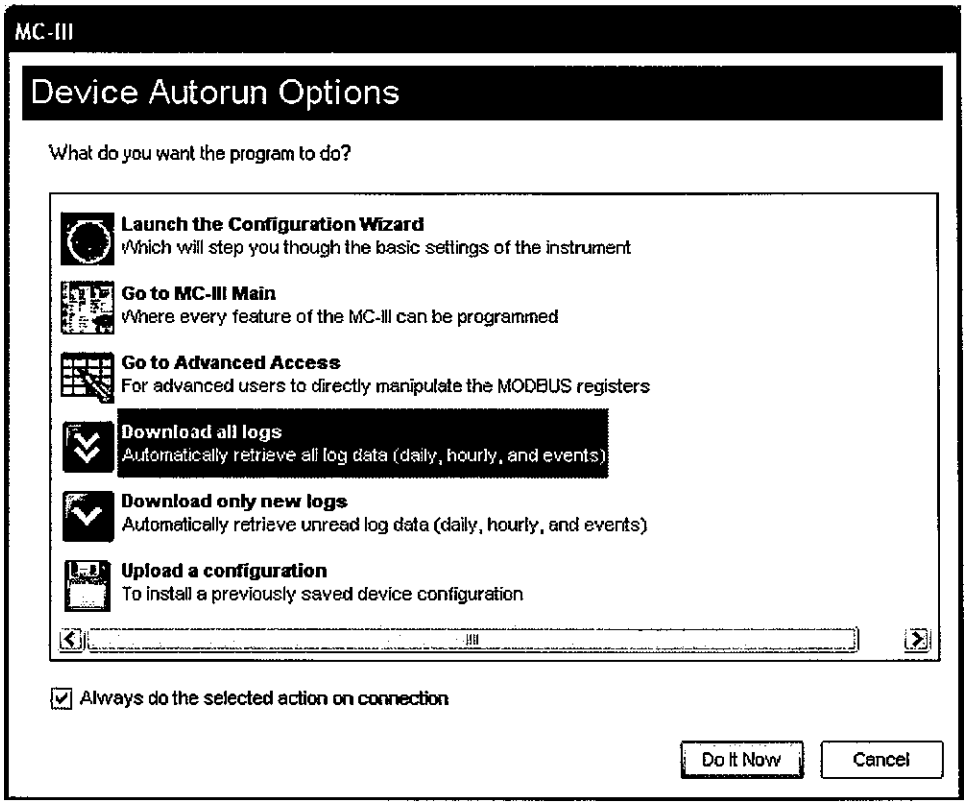

Figure 4.4—Device Autorun Options screen

Changing Autorun Settings

To change an autorun setting —that is, to initiate an autorun action, to terminate an autorun action, or to change to a different autorun action—without exiting to the Welcome screen, choose Options/Program Options from the menu bar and select Autorun from the dropdown list (Figure 4.5).

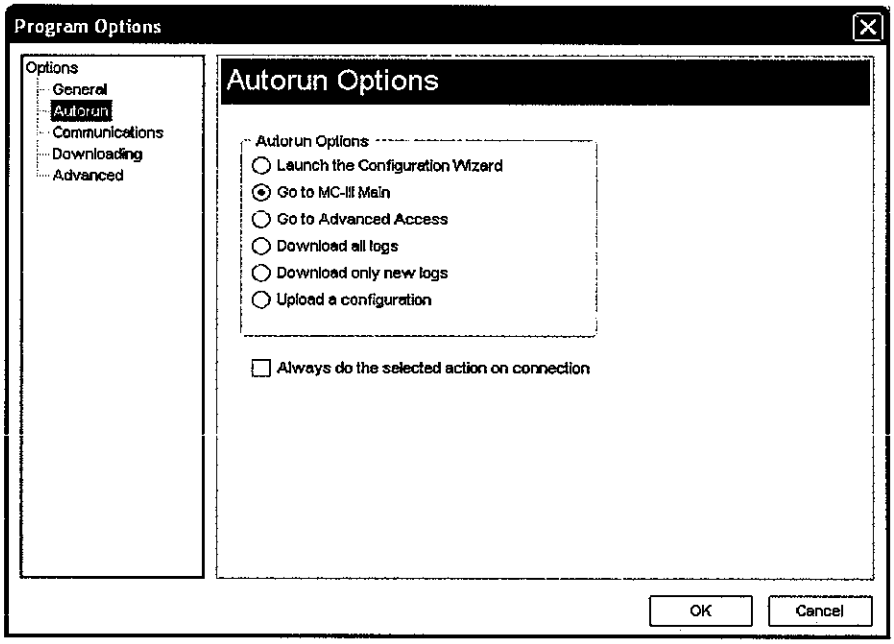

Figure 4.5—Options/Program Options screen for changing autorun settings

Express Connect Option

By default, the MC-III interface software automatically attempts to connect to the instrument when a user clicks on the desktop application icon. For more information on disabling the "express connect" feature and changing communications options, see *Appendix A*.

Canceling Express Connect

To temporarily cancel the "express connect" function without exiting the software program, click in the LCD area of the device on the Welcome screen or choose File>Cancel Express Connect from the menu bar (*Figure 4.6*, page 43). The software will stop all attempts to connect to the device. The "express connect" function will be restored when the user exits the program and attempts to re-open the software.

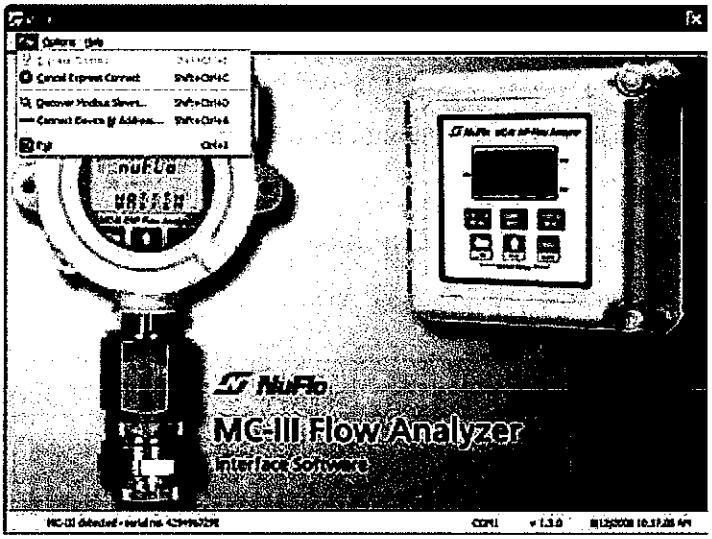

Figure 4.6—Cancel Express Connect option

To reattempt a connection to the device after canceling the "express connect" function, click the LCD on the Welcome screen again, or choose File>Express Connect from the menu bar.

Changing the Communications Port

The computer will attempt to connect to the MC-III WP via the port that the user selects the first time he connects to the instrument. However, if a network dictates that the computer connect through another communications port (actual or virtual), the user must specify the appropriate COM port. To change the COM port setting, click on Options>Select COM Port (Figure 4.7), and select the appropriate COM port from the list of ports detected.

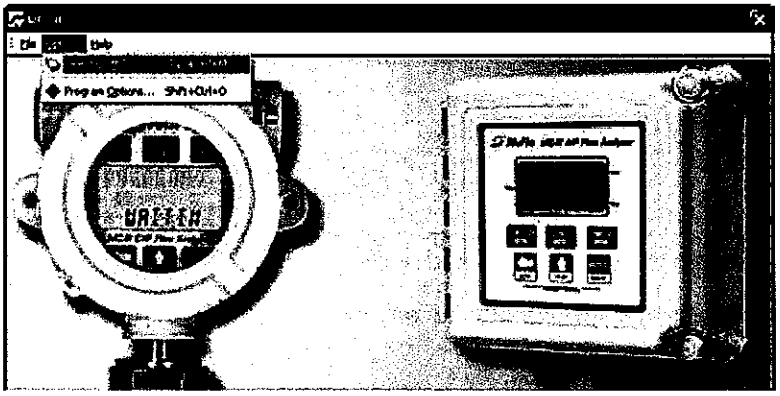

Figure 4.7—COM port selection menu

Software Connection in Multi-Device Network

In most cases, the automatic launch (or "express connect") feature is a convenient time-saver. However, if multiple devices are daisy-chained together in a network, this feature can interfere with the user's ability to connect to a specific device. The software allows the user to temporarily disable the "express connect" feature and query the system for all connected devices. From the resulting list of devices, the user can then connect to the appropriate slave address.

To select a device from a network of instruments, perform the following:

1. From the Welcome screen, choose File>Cancel Express Connect (Figure 4.6).

2. Click File>Discover Modbus® Slaves.
3. Enter a range of addresses you want to search (Figure 4.8).
4. Enter the baud rate established for network communications.
5. Adjust the time-out setting, if necessary.
6. Click "Search." The software will scan all addresses specified and display all instruments connected.
7. Click on the appropriate address to connect to a device.

Important: In daisy-chain configurations, verify that each device has a unique slave address.

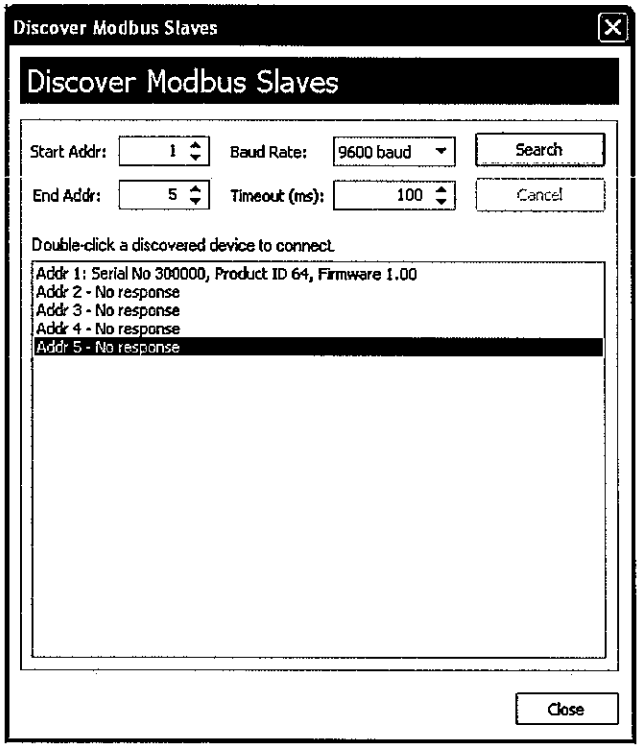

Figure 4.8—Automatic detection of all connected devices

A user who knows the address of a specific device may also connect to it by clicking File>Connect Device at Address (Figure 4.9).

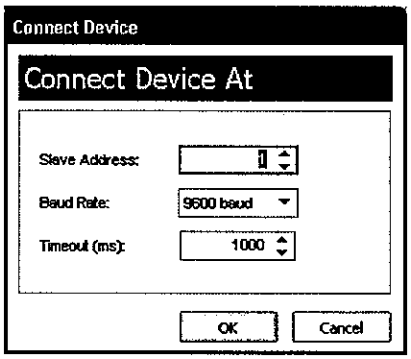

Figure 4.9—Slave address selection screen

Setting Log Download Preferences

The MC-III WP automatically saves daily flow logs on the contract hour, and hourly flow logs around the clock. The instrument also automatically creates an event record each time a user change is made. After downloading these logs from the instrument, the instrument saves the data in a file. By default, the logs are saved as .csv files.

The file format of the auto-save flow log and event log files is user-configurable. Users can configure the software to download the auto-save flow and event logs as Excel (.xls) files by selecting Options>Program Options>Downloading from the menu bar (Figure 4.10).

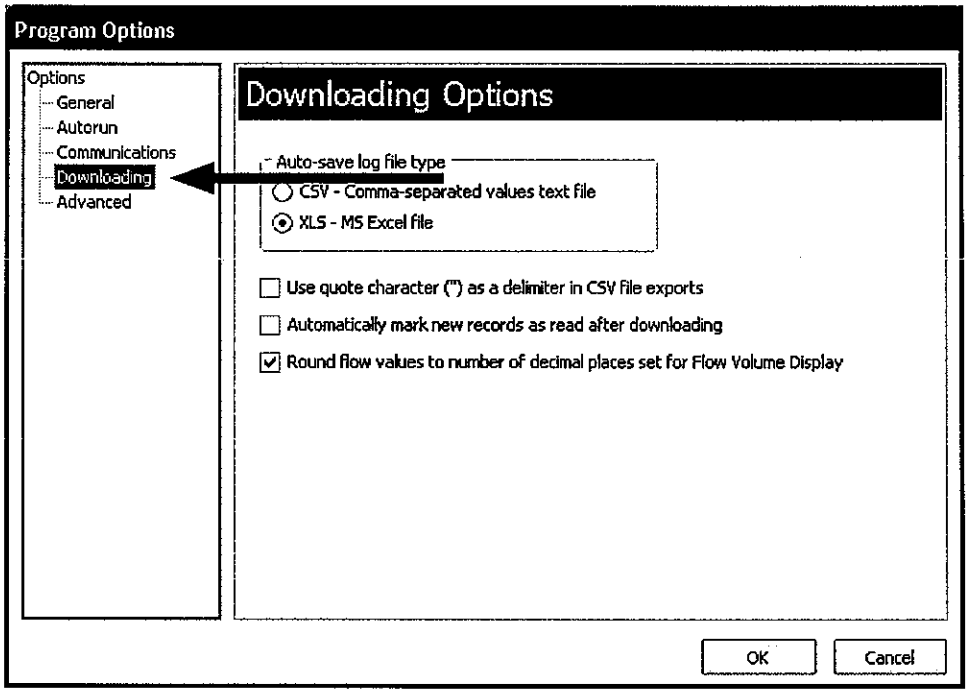

Figure 4.10—Log file type selection

Configuring the MC-III WP

The MC-III WP offers three methods for configuring parameters:

- The "Configuration Wizard" (Figure 4.11) condenses the configuration process into nine easy-to-follow steps (compensated gas measurement and multipoint linearization are not supported in the wizard).
- The MC-III Main screen (*Figure 4.12*, page 47) gives users complete access to all configuration parameters.
- The Advanced screen (*Figure 4.13*, page 47) provides access to Modbus® registers that can be modified to change configuration parameters (recommended only for system configurators and host programmers).

If the desired configuration settings have been saved previously, the configuration file can also be uploaded, eliminating the need to re-input configuration data. See *Saving and Uploading Configuration Files*, page 71, for details.

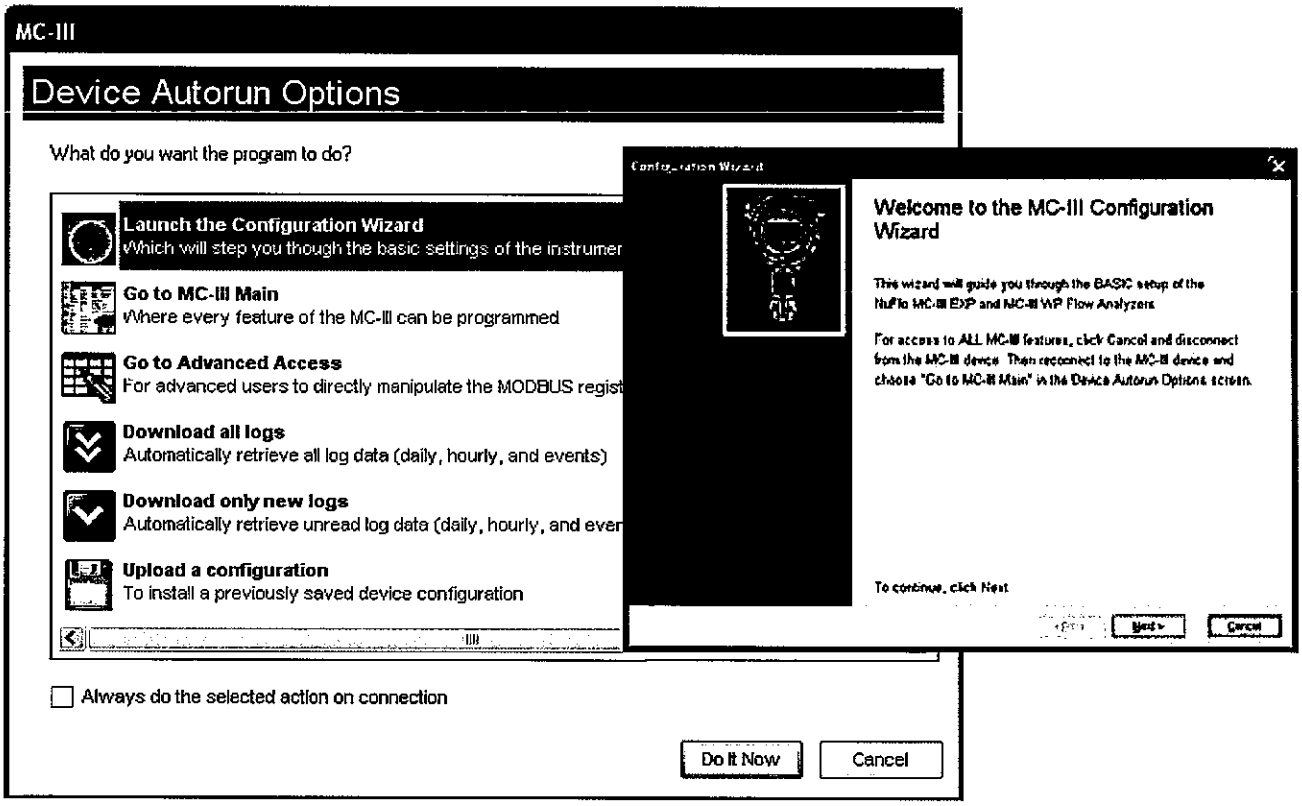

Figure 4.11—Configuration Wizard (for novice users)

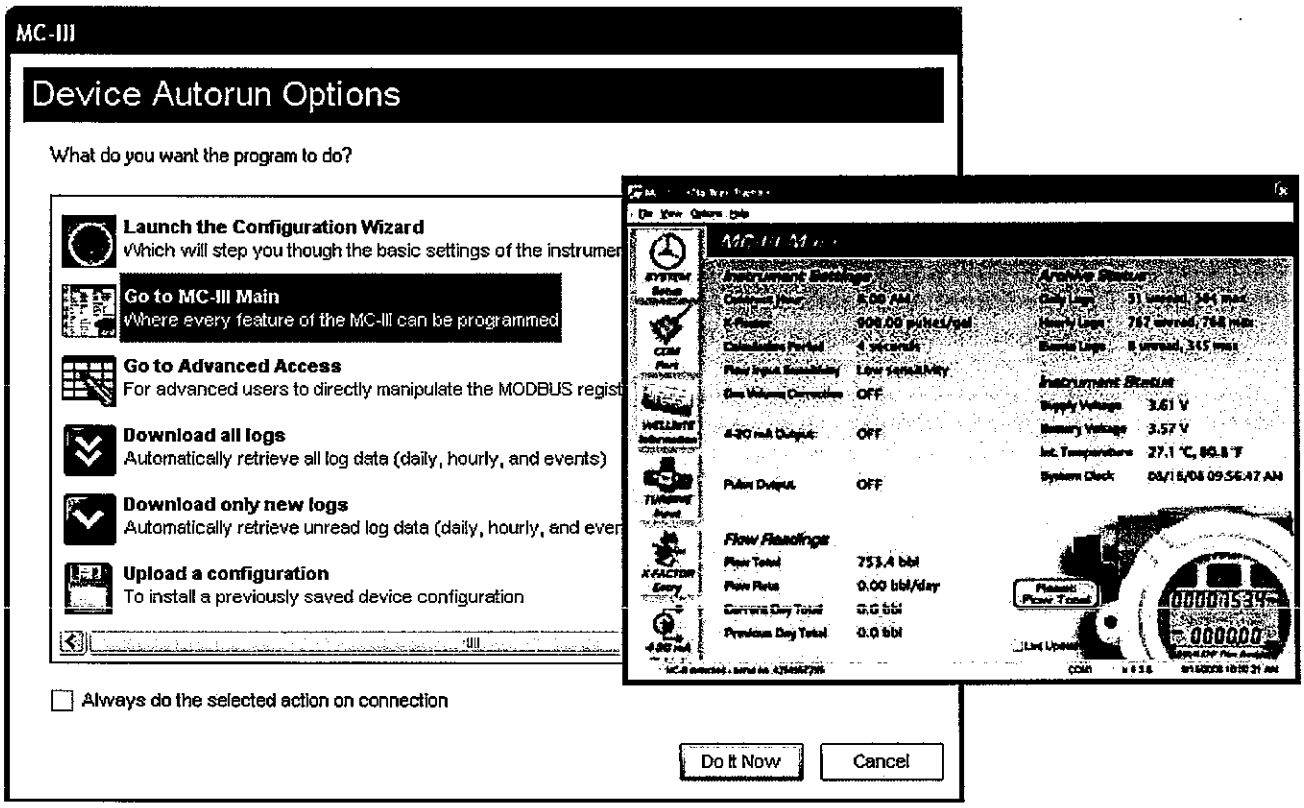

Figure 4.12—MC-III Main configuration option for complete access to configurable parameters

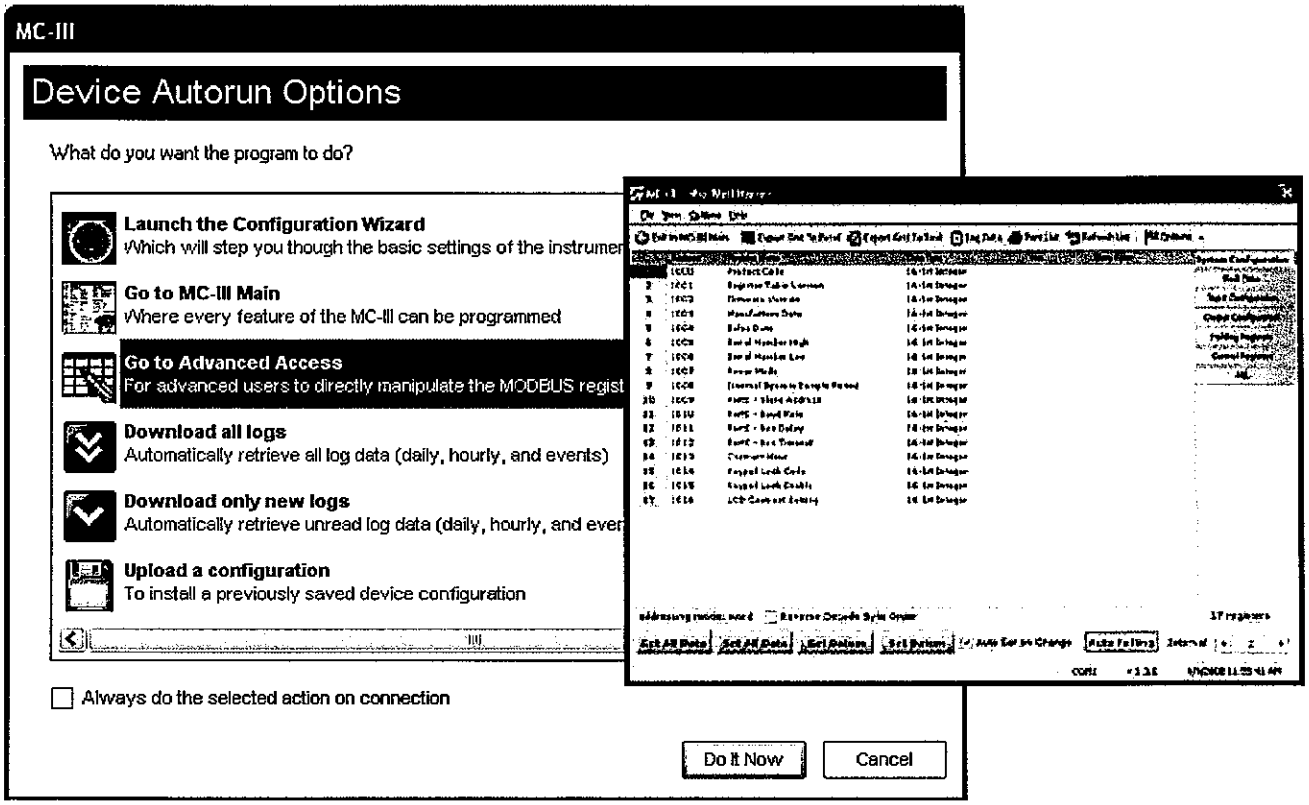

Figure 4.13—Advanced Access configuration option for system configurators and host programmers

Configuration Wizard

The Configuration Wizard is ideal for first-time users who want to perform a basic calibration for liquid or gas measurement. By following the instructions on nine screens, even a first-time user can successfully configure the MC-III WP.

See *Table 4.1*, page 49, for a list of settings that are configurable with the keypad, the software Configuration Wizard, and the software MC-III Main Screen.

Important: The Configuration Wizard does not allow multipoint calibration or gas volume correction. To select these parameters, the user must access the MC-III Main screen.

Caution: Do not use the Configuration Wizard to change individual settings. When the Configuration Wizard is used, system default settings are restored before the new settings entered in the Calibration Wizard are written to the program. Previous configuration settings are saved automatically in C:\NuFlo log data\MC-III\Config Backup Files.

Using the Pencil Tool

The data entry fields in the Configuration Wizard are highly intuitive, and most can be completed by clicking in the field and entering new data or selecting a checkbox. For data fields that require the user to enter a value, such as a K-factor, and designate a decimal position, a pencil icon provides a link to a data-entry window.

To enter a new value, click on the pencil icon (Figure 4.14). A new window will appear, allowing the user to enter a new value, and designate the appropriate decimal position using a slide bar. This method ensures that the decimal point setting and data-entry resolution displayed in the software and on the instrument LCD correlate.

This tool is used to enter the calibration factor, flow rates for 4-20 mA output, and the scale factor for pulse output.

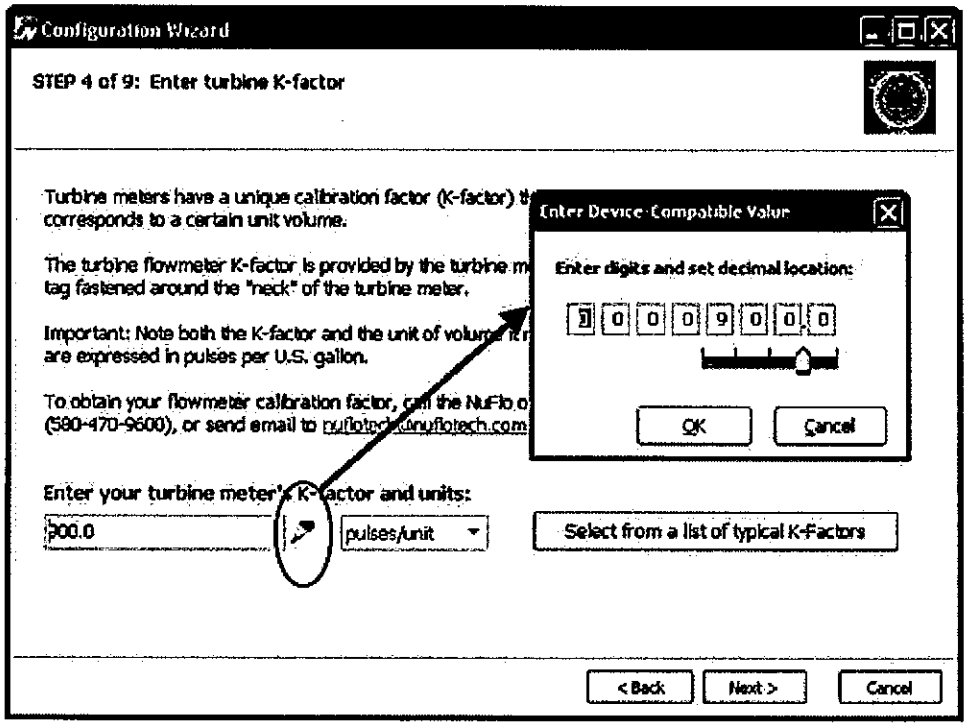

Figure 4.14—Pencil tool icon and data-entry window

Table 4.1—Menus for Configuring Parameters

Configurable Parameter	Instrument Keypad	Configuration Wizard	Menu Screen (accessed from MC-III Main)	For information, see page ...
Well Name	—	Step 1	Wellsite Information	58
LCD Contrast	—	—	System Setup	54
Security Setup	—	—	System Setup	55
Contract Hour	—	Step 2	System Setup	54
Volume Display (units, decimal location)	Yes	Step 5	Turbine Input	59
Rate Display (units, decimal location)	Yes	Step 5	Turbine Input	59
Input Type	Yes	Step 3	Turbine Input	60
Input Sensitivity	Yes	—	Turbine Input	60
Input Cut-off Thresholds	—	—	Turbine Input	60
Calculation Period (seconds)	—	—	Turbine Input	60
K-Factor	Yes	Step 4	K-Factor Entry	61
Multipoint K-Factor	—	—	K-Factor Entry	62
Gas Volume Correction	—	—	K-Factor Entry	63
4-20 mA Output	Yes	Step 6	4-20 mA Output	65
Pulse Output	Yes	Step 7	Pulse Output	69
Slave Address	Yes	Step 8	COM Port	56
Baud Rate	Yes	Step 8	COM Port	56
Bus Delay	—	—	COM Port	57
Bus Timeout	—	—	COM Port	57

MC-III Main Screen

The MC-III Main menu screen (Figure 4.15) is the configuration hub of the MC-III WP. From the Main screen, users can

- review all current instrument settings and flow readings
- check the log archive and instrument status
- access all submenus for changing configurable parameters
- reset the total to zero

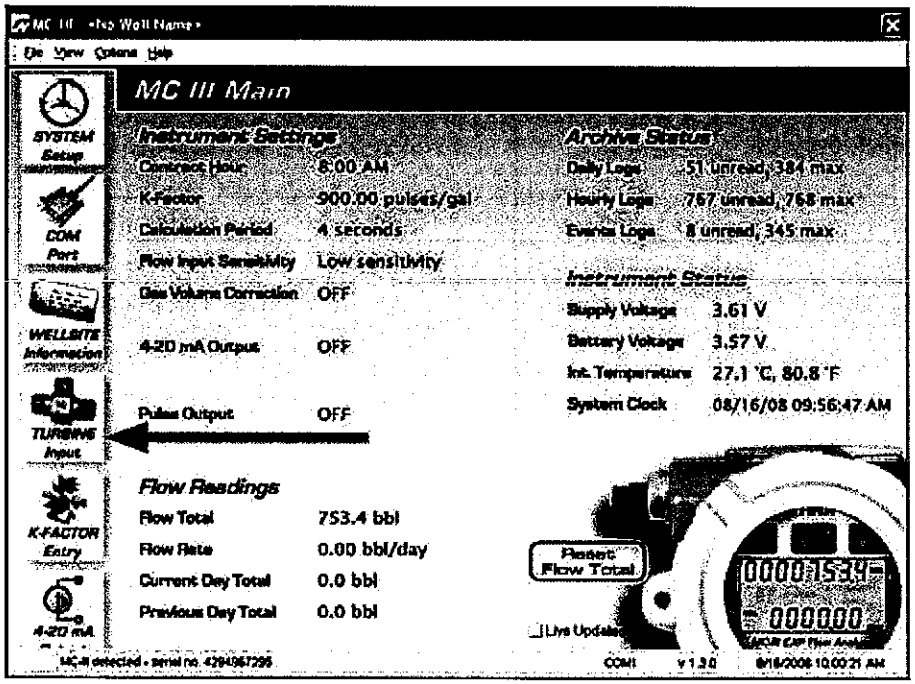

Figure 4.15—MC-III Main screen provides direct access to all menu functions using the scrolling menu bar at the left side of the screen.

Data Display and Updates

Each time the software polls the instrument, a small icon appears briefly in the lower left corner of the screen. If the "Live Updates" checkbox in the lower right corner of the screen is checked, the instrument settings and the LCD displays will automatically update with each poll.

"Live Updates" Checkbox

The "Live Updates" option is enabled by default. However, in the event that slow communication speeds are used or the system times out frequently, the user can uncheck the "Live Updates" checkbox and periodically query the system by clicking on the LCD graphic on the Main screen.

Reset Flow Total Button

The flow total can be reset to zero at any time by clicking on the "Reset Flow Total" button.

Scroll Bar

A scroll bar at the left side of the screen (Figure 4.15) gives the user easy access to any of seven configuration menus and two log archive screens (see *pages 52* and *53*). Using these menus, the user can change all configurable parameters of the instrument. Once the instrument has been configured, the Main screen access should always be used for changing individual parameters while retaining all other configuration settings.

Buttons and Tools

Apply and OK Buttons

Changing parameters on a submenu screen involves selecting the proper screen from the scroll bar, selecting information from dropdown menus or entering data in data fields, and saving the data using the "Apply" or "OK" button. "Apply" allows the user to apply the changes without leaving the submenu screen. "OK" allows the user to apply the changes and returns the user to the Main screen.

Refresh and Cancel Buttons

To update the display of settings on any submenu screen by forcing a reread of configured parameters, press the "Refresh" button. The "Refresh" button clears any entry that has not been applied, therefore, pressing "Refresh" is also a convenient way to erase an incorrect entry. A "Cancel" button allows the user to close out of a submenu screen without saving new settings and returns the user to the Main screen.

Pencil Tool for Data Entry

The data-entry fields in the MC-III Main sub-menu screens are highly intuitive, and most can be completed by clicking in the field and entering new data, or selecting a checkbox. For data fields that require the user to enter a value, such as a K-factor, and designate a decimal position, a pencil icon provides a link to a data-entry window.

To enter a new value, click on the pencil icon (Figure 4.16). A new window will appear, allowing you to enter a new value, and designate the appropriate decimal position using a slide bar. This method ensures that the decimal point setting and data-entry resolution displayed in the software and on the instrument LCD correlate.

This tool is used to enter the calibration factor, flow rates for 4-20 mA output, and the scale factor for pulse output.

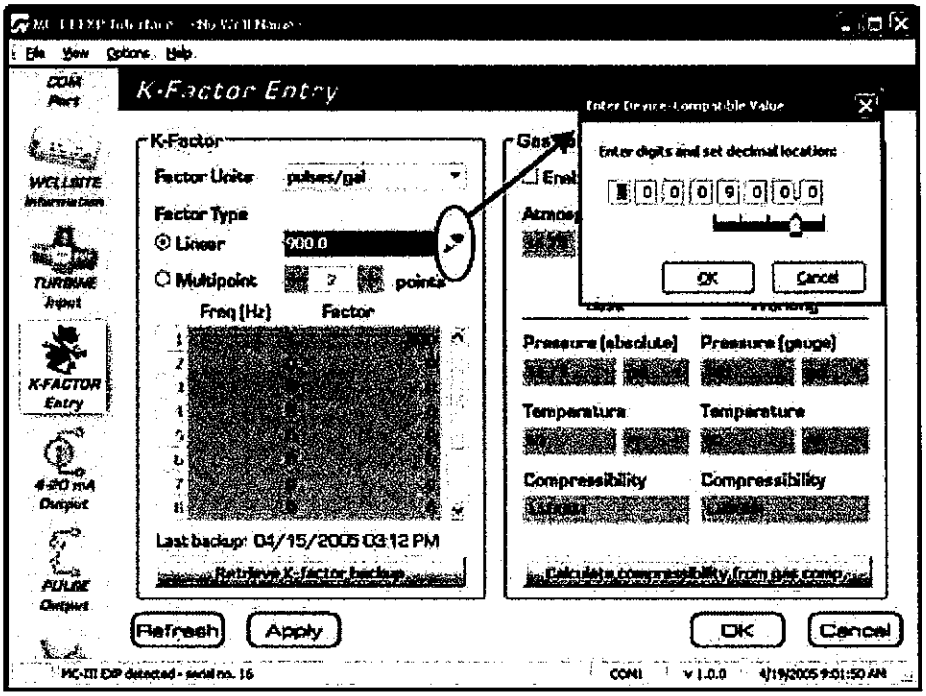

Figure 4.16—Pencil tool icon and data-entry window

Configuration Submenus (MC-III Main)

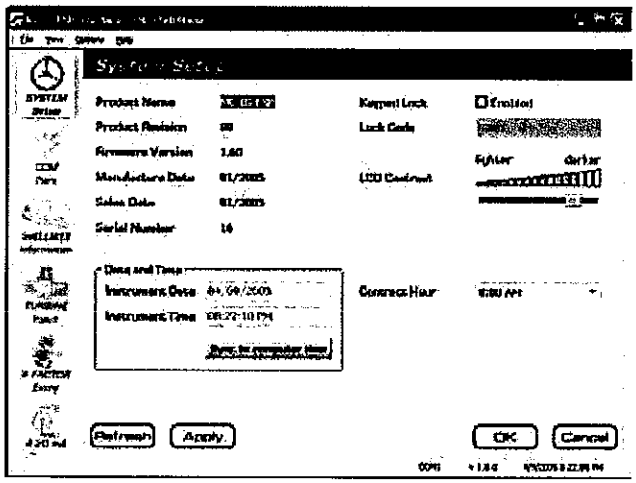

System Setup

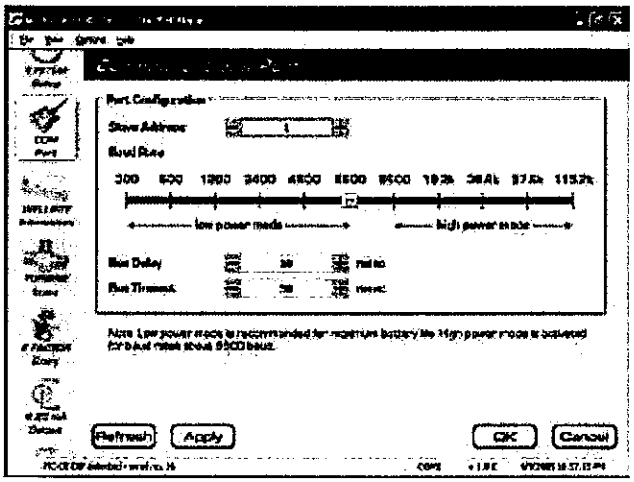

Communications Port

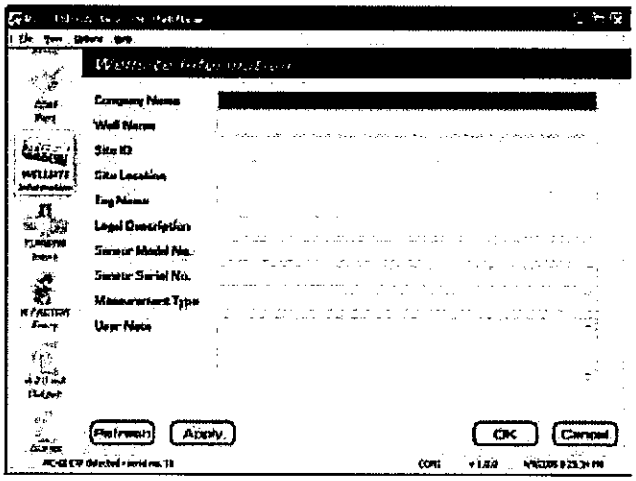

Wellsite Information

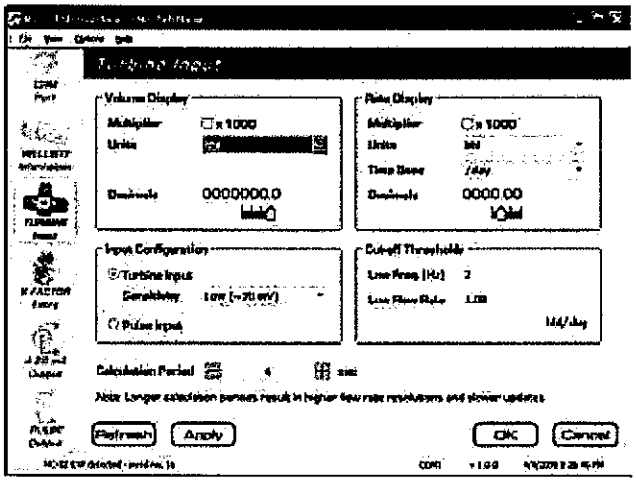

Turbine Input

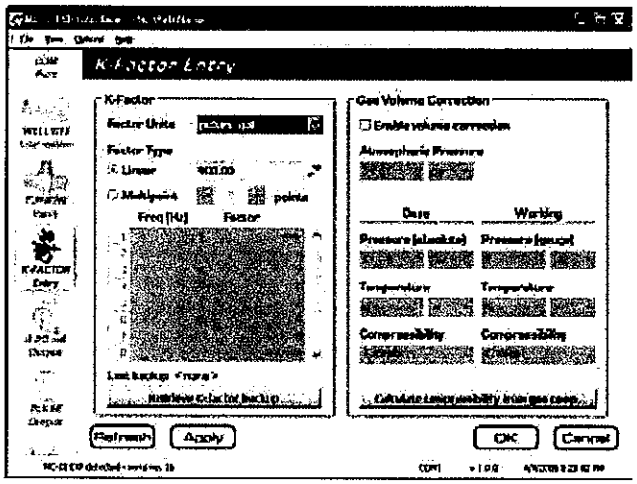

K-Factor Entry

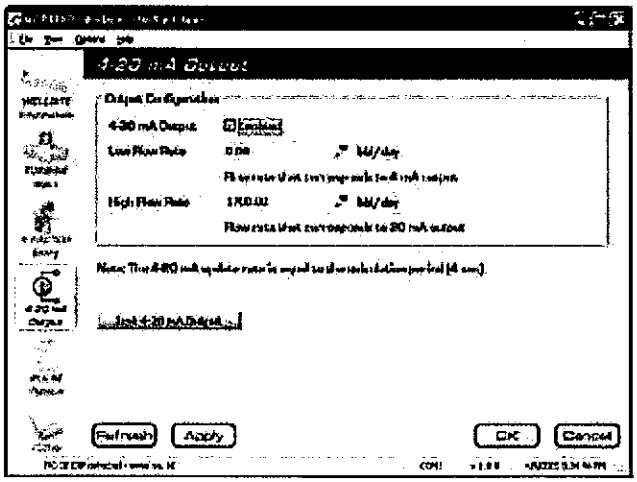

4-20 mA Output

Configuration Submenus (cont'd)

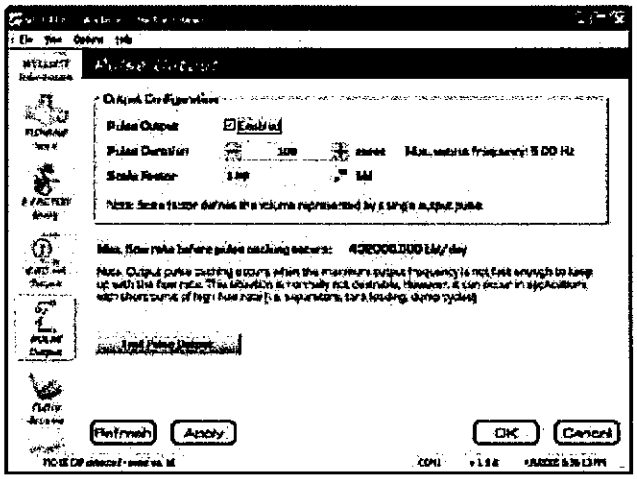

Pulse Output

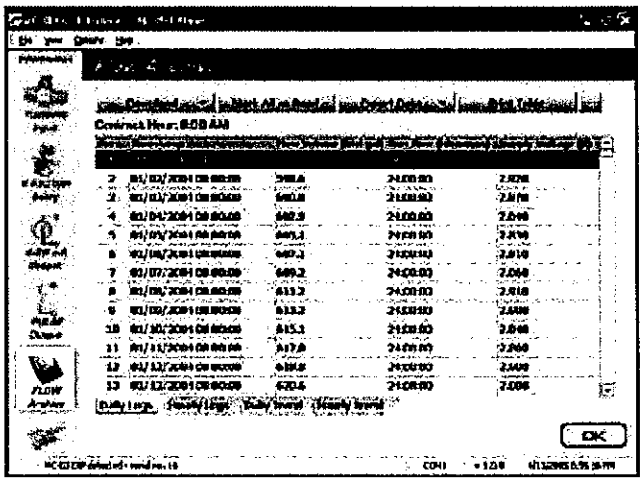

Flow Archive

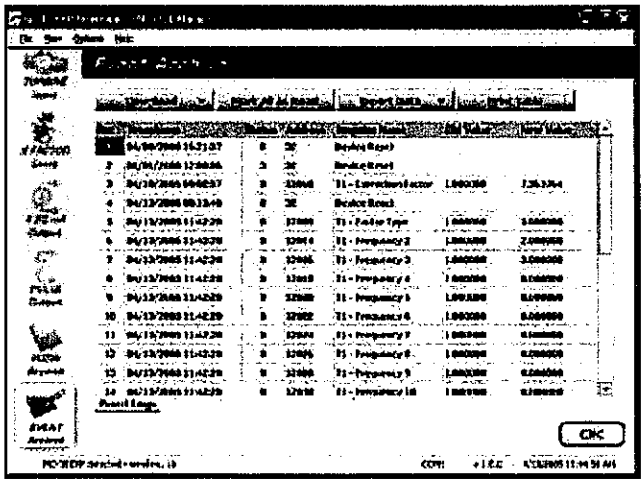

Event Archive

System Setup

The first of the submenus on the Main screen scroll bar—System Setup—allows users to adjust time/date, set the desired contract hour, enable or disable the password-protected security option, and adjust the LCD contrast.

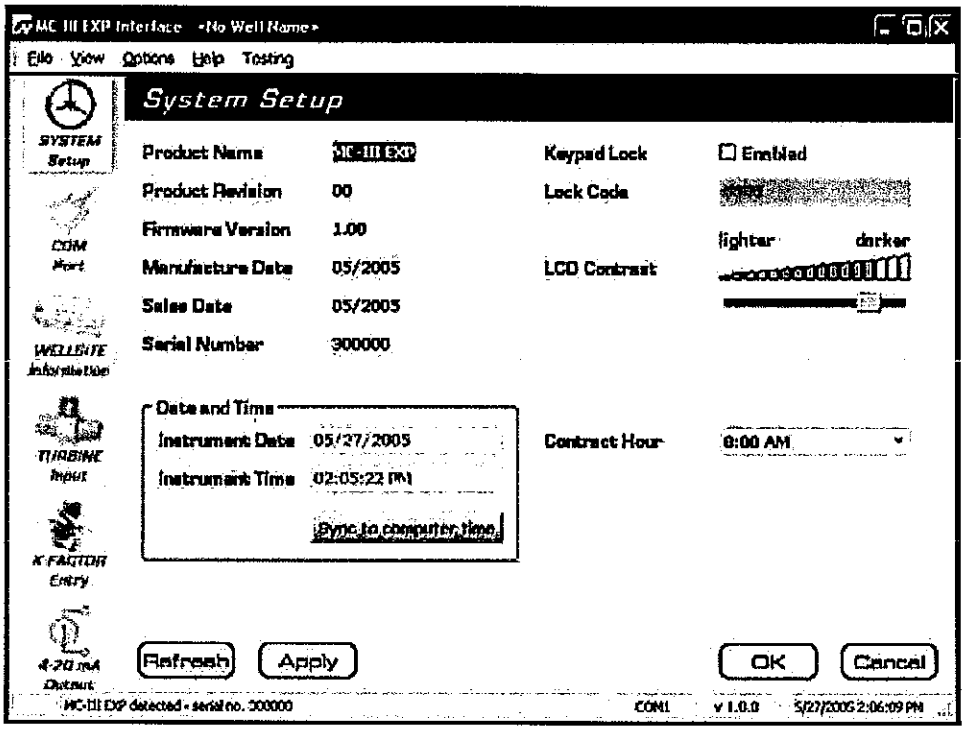

Figure 4.17—System Setup screen

Time/Date Synchronization

The MC-III WP includes a real-time clock for timekeeping and log time stamps. Upon connecting with the instrument, the interface software prompts the user to synchronize the instrument time and date with the time and date displayed on the computer if the time difference exceeds 60 seconds. To change the clock synchronization threshold to a value other than 60 seconds, see *General Options*, page A-1.

A user can synchronize the instrument and computer clocks at any time by clicking the "Sync to Computer Time" button on the System Setup screen.

Contract Hour

Hourly flow totals are logged in the archive on the hour. The contract hour determines the exact time when the daily flow total is logged. The contract hour is easily adjusted by selecting the appropriate hour from the dropdown list on the System Setup screen.

LCD Contrast Adjustment

LCD contrast is temperature-dependent and may require adjustment for optimum readout visibility. A slide bar allows users to quickly adjust the contrast of the LCD.

Security Setup

Setting a keypad security code will prevent unauthorized personnel from altering calibration data or resetting totals, and the security function is recommended to preserve data integrity of the system. The MC-III WP's keypad security feature is disabled at the factory.

To enable the security protection, check the "Keypad Lock" checkbox on the System Setup screen, and enter a four-digit lock code in the field below the checkbox. (Do not use "0000.") The security feature will be activated the next time a user attempts to access the keypad.

Firmware Version Number

As firmware is upgraded, firmware version numbers change. The firmware version number shown may assist technical support personnel in troubleshooting an operational issue.

Serial Number

The serial number of your MC-III WP can be used to track the history of your unit to include warranty status.

Communications Port

The Communications Port screen (Figure 4.18) allows users to change the settings that are required for Modbus® communication.

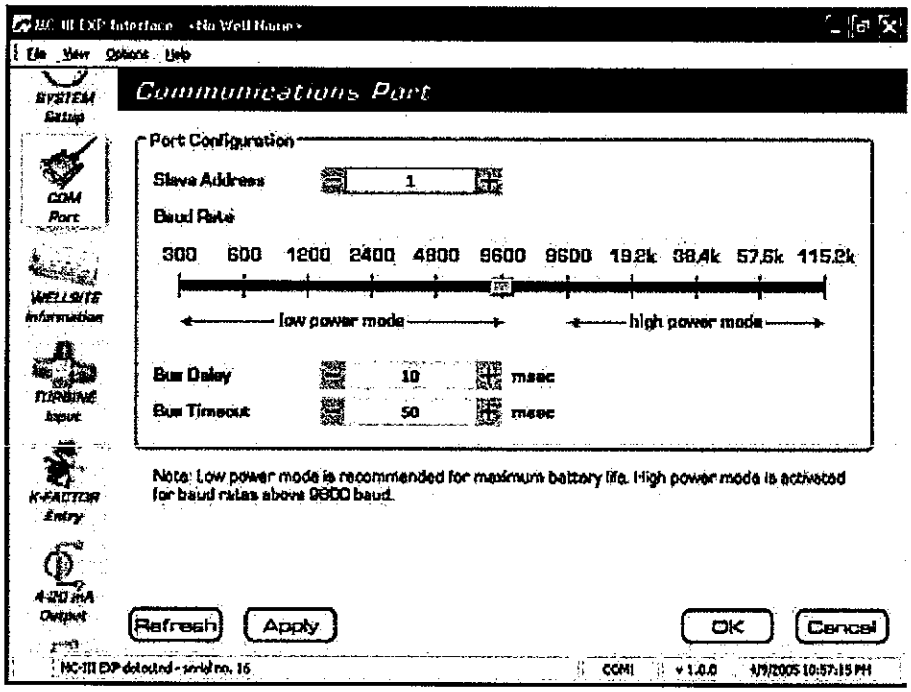

Figure 4.18—Communications Port screen

Slave Address

The slave address allows the MC-III WP to communicate with other devices via Modbus®. It is a number that ranges from 1 to 65535, excluding 252 to 255 and 64764. If a Modbus® request message contains the matching slave address, the device will respond to the request. In network arrangements, the slave device must have a unique address. For more information about Modbus® communications, refer to the protocol manual section.

To change the slave address, select a number using the "plus" and "minus" buttons on the screen, or using the page-up and page-down keys on your computer keyboard. If Modbus® communication is not used, leave the slave address at the factory setting (1).

Baud Rate

The baud rate is the number of bits per second that are on the serial port. Baud rates supported by the MC-III WP range from 300 to 115.2K. This setting must match the setting of the master device polling the MC-III WP or the serial port. This only applies to the Modbus® communications; if Modbus® is not used, set the baud rate to 9600.

To change the baud rate, slide the selector bar to the appropriate setting. The default setting is 9600 baud. Note that the 9600 baud rate is available in both the low-power and high-power modes. When the instrument is powered by batteries alone, the low-power mode is recommended.

Auto-Negotiate Option

When connected devices are capable of switching baud rates automatically or when devices are directly connected to an MC-III WP, a user may configure the MC-III interface to automatically negotiate the fastest

baud rate during device connection. This "negotiated" baud rate does not replace the configured baud rate, but rather provides a temporary boost of baud rate while the computer is connected to the device for faster downloads. After the software disconnects, the device reverts to the configured baud rate.

By default, this function is disabled. To enable automatic baud rate negotiation on device connect, choose Options/Program Options from the menu bar, select Communications from the dropdown options list, check the "Attempt auto-negotiation..." checkbox, and click "OK" (Figure 4.19). To initiate an immediate search for the fastest baud rate without exiting tto the Welcome screen, check the "Enable auto-negotiated baud rate" checkbox, click the "Test Now" button to the right of the checkbox, and click "Yes" at the prompt in the Confirm dialog box. See also *Auto-Negotiate Option*, page A-4.

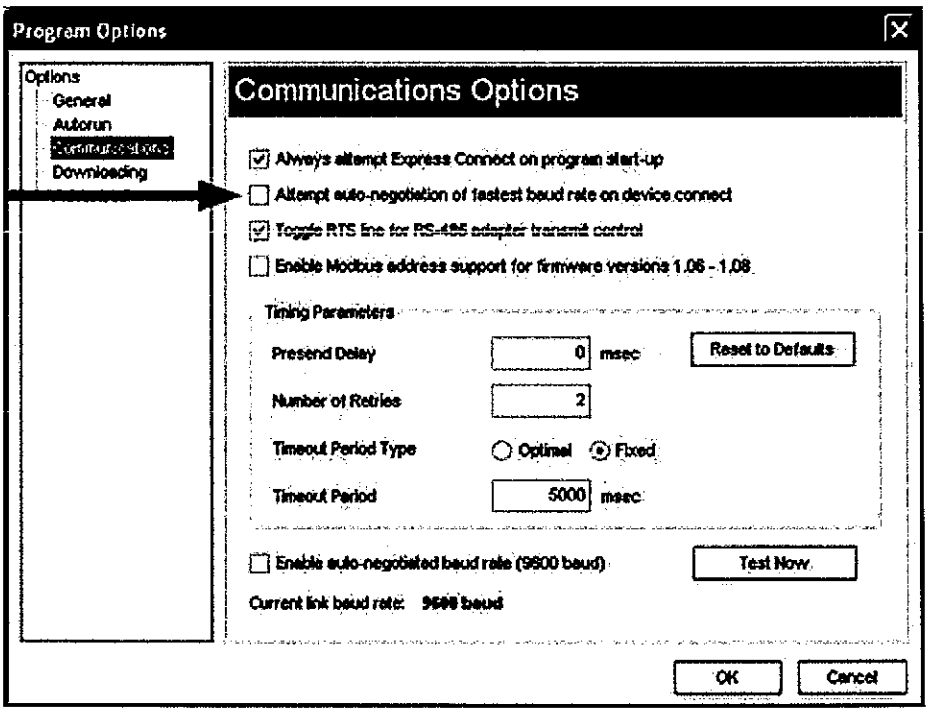

Figure 4.19—Communications Options screen

Bus Delay

Bus delay is the amount of time (in milliseconds) that passes before the MC-III WP attempts to take control of the RS-485 bus and transmit a message back to the requesting device. The MC-III WP responds very quickly to incoming Modbus® requests—in some cases, too quickly. A configurable delay allows the user to control this response time. A setting of 10 ms is normally sufficient, but may require adjustment when the MC-III WP is communicating with a radio or other end device that responds more slowly.

Bus Timeout

Bus timeout is the amount of time (in milliseconds) that must pass to cause the MC-III WP to reset its internal Modbus® message handler. The default value of 50 ms is normally sufficient.

Software Communication Options

The default timing parameters in the MC-III WP support communication with most radios and Modbus® devices. However, if the MC-III WP is used with a device that has a very slow response time, it may be necessary to adjust the timing parameters to enhance performance. For information about these parameters, see *Appendix A*, Software Program Options.

Wellsite Information

The Wellsite Information screen (Figure 4.20) allows users to enter information that distinguishes the wellsite, such as company name, well name, and site location. While most of the fields on this screen are optional, a well name should be assigned.

The well name (limited to 20 characters in length) will also serve as the name of the folder where flow logs generated by the MC-III WP software will be archived. If a well name is not entered on this screen, logs will be saved in a folder titled "NO_WELLNAME."

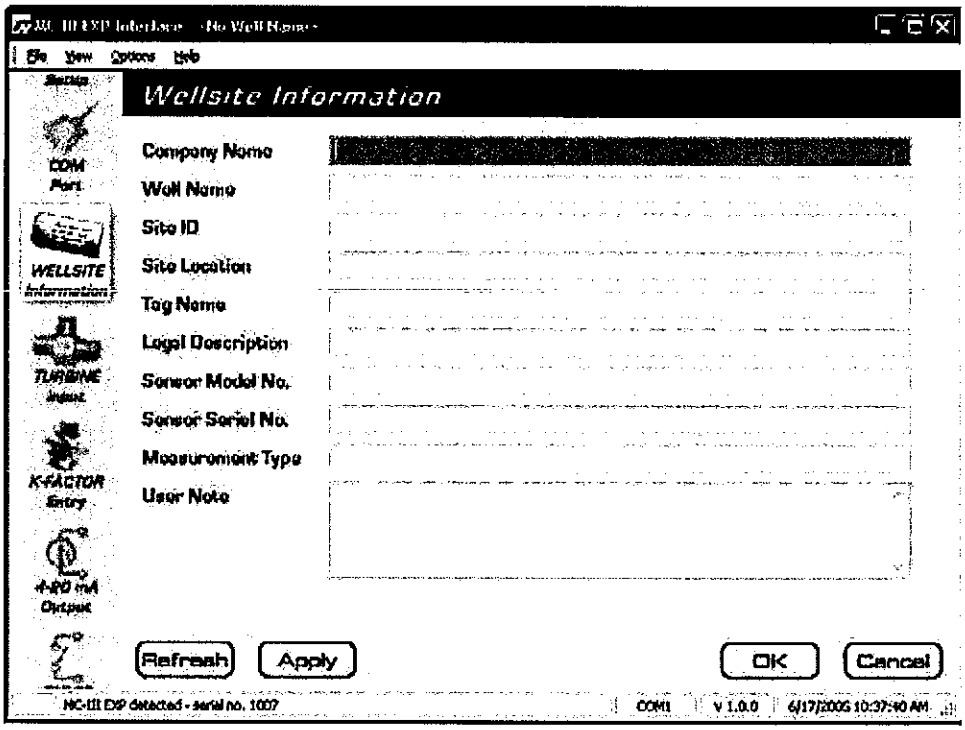

Figure 4.20—Wellsite Information screen

Turbine Input

The Turbine Input screen (Figure 4.21) allows users to configure the displays for volume and rate, select the type of input to be used (turbine input or pulse input), determine cut-off thresholds for measuring flow, and determine the display update frequency.

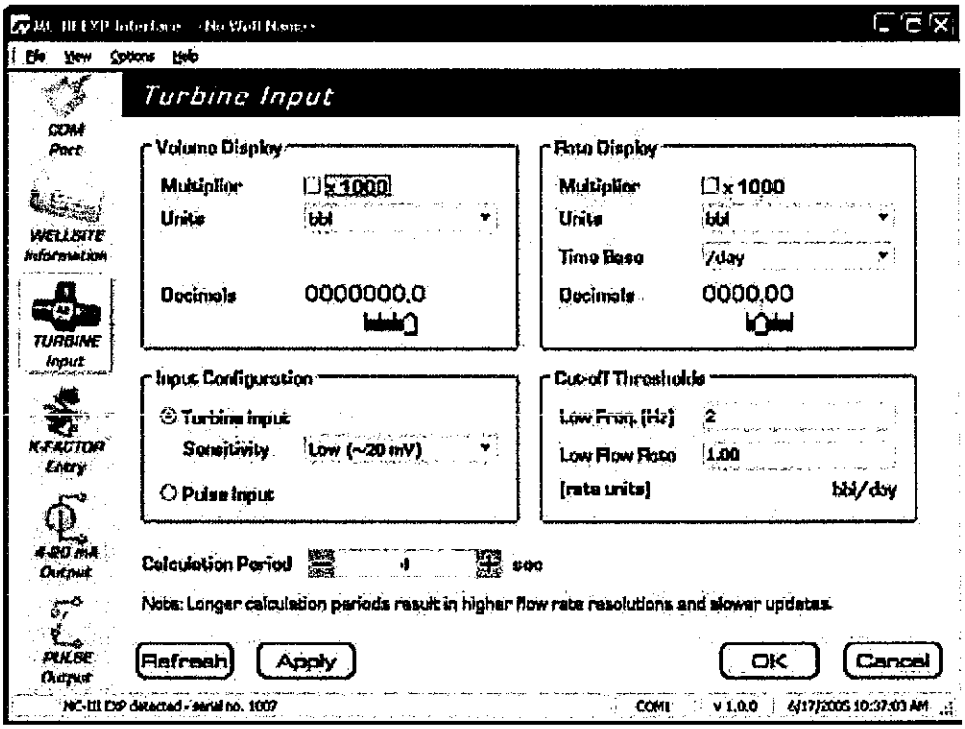

Figure 4.21—Turbine Input screen

Volume Display

The Volume display can be configured to display totals in one of five preprogrammed engineering units or in a user-defined unit (for use with a calculated divisor).

Important: If volume is to be measured in user-defined units, the K-Factor unit must also be entered as "pulses per unit." For more information, see *Entering a Calculated Divisor*, **page 29.**

To display the volume in multiples of 1,000 units, check the "Multiplier" checkbox. Users can specify decimal point position, from 0.1 to 0.0001 of a unit, using the slide bar on the Turbine Input screen.

Important: Before enabling or disabling the "× 1000" unit option for displaying flow totals, clear the total display to zero. If the total is not cleared, the accumulated total displayed will represent a combination of two different units and will not provide an accurate flow reading.

Rate Display

The Rate display comprises two parts: a volume unit and a time-base unit. The volume portion of the Rate display can be configured in one of five preprogrammed engineering units or in a user-defined unit (for use with a calculated divisor).

To display the volume portion in multiples of 1,000 units, check the "Multiplier" checkbox.

The time-base portion of the Rate display can be configured in one of four preprogrammed engineering units: per day, per hour, per minute, or per second. Users can specify decimal point position, from no decimal up to 0.001 of a unit, using the slide bar on the Turbine Input screen.

Important: If the volume portion of the Rate display is to be measured in user-defined units, the K-Factor unit must also be entered as "pulses per unit." For more information, see *Entering a Calculated Divisor*, **page 29.**

Input Type/Sensitivity Configuration

The MC-III WP accepts either a turbine input or a pulse input. When the turbine input is selected, the user can also specify one of three sensitivity levels (low, medium, or high) to help minimize noise interference in the signal reception. A "low" sensitivity setting will detect a signal of approximately 20 mV peak-to-peak, while a "high" sensitivity setting will detect only signals that exceed 40 mV, peak-to-peak.

When a pulse input is selected, no sensitivity setting is required.

Cut-Off Thresholds

Periods of very low or interrupted flow can lead to inaccuracies in indicated flow totals. To help prevent these inaccuracies, the user can establish cut-off thresholds to determine the minimum frequency and/or flow rate at which a signal will be recorded.

The flow rate cut-off is a setpoint for the accumulation of flow time in the hourly and daily records, and can be applied to either a turbine input or pulse input.

The frequency cut-off is reserved for the turbine input only. When the low-frequency cut-off is configured, the MC-III WP will ignore inputs that are less than the user-entered value.

Calculation Period

The flow calculation period is the number of seconds that are allowed for calculating the flow condition. This setting is easily adjusted with the "plus" and "minus" buttons on the screen, or the page-up and page-down keys on your computer keyboard. Increasing this setting value results in flow rates with greater resolution. This setting is also the time allowed for processing of display updates.

K-Factor Entry

The K-Factor Entry screen (Figure 4.22) allows users to calibrate the MC-III WP using a single calibration factor from a turbine flowmeter or multipoint linearization. Users can also configure the MC-III WP to compensate for the effect of pressure, temperature, and compressibility on gas volume measurements.

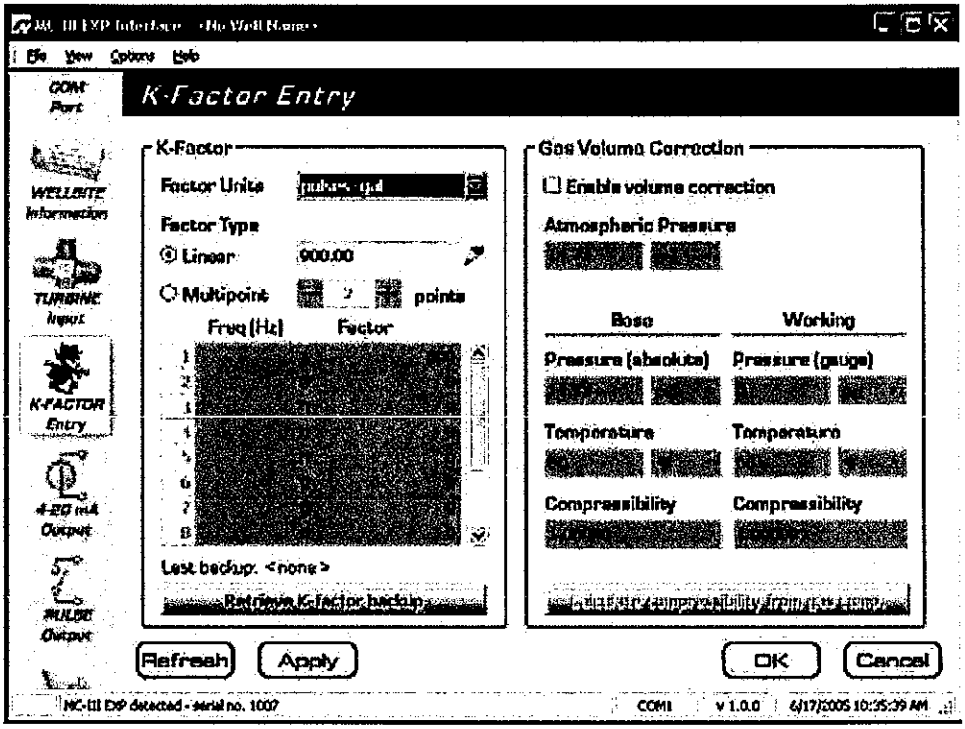

Figure 4.22—K-Factor Entry screen

K-Factor Units

K-Factor entry consists of selecting the K-Factor unit and type (linear or multipoint). In selecting the unit, users can choose from five preprogrammed units (pulses per gallon, barrel, cubic meter, cubic foot, or liter). If a calculated divisor is to be used, "pulses per unit" should be selected.

K-Factor Type

For linear calibration, the user need only select the Linear checkbox and enter the K-factor of the turbine meter. To enter the K-factor value, click on the pencil icon to open a data-entry window (Figure 4.23). Enter the digits, left to right, and adjust the slide bar to move the decimal point to the proper position.

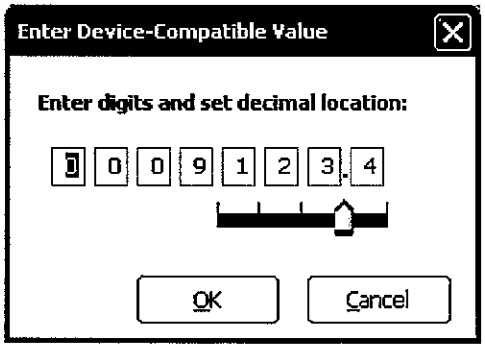

Figure 4.23—Data-entry screen for linear K-factor

For multipoint calibration, the user selects the Multipoint checkbox, and then enters the number of calibration points he desires using the "plus" and "minus" buttons on the screen or the page-up and page-down keys on a computer keyboard. Up to 12 calibration points may be entered. Frequency and factor data-entry fields are automatically activated for the number of calibration points selected. The user can then enter the appropriate data for each point.

K-Factor Backup

Each time a calibration factor is entered or changed, the software prompts the user to copy the previous settings to backup memory (Figure 4.24). In the event that an error is made while entering configuration parameters, the user can restore the last saved set of configuration settings to the instrument.

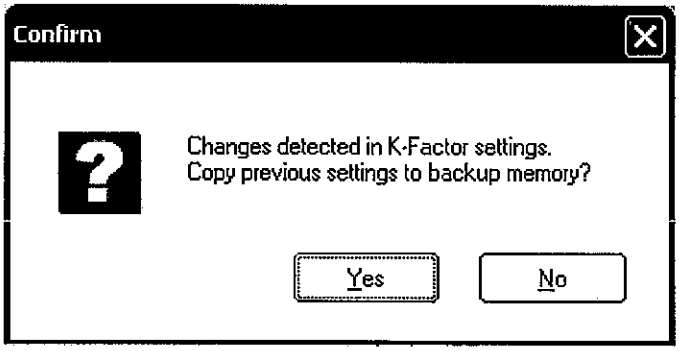

Figure 4.24—Prompt to copy previous calibration settings to backup

Select "yes" to save the previous calibration factor to memory. The date and time of this backup is displayed next to the "Retrieve K-Factor Backup" button on the K-Factor Entry screen. Only the last saved backup can be retrieved.

To retrieve the last saved K-Factor backup, perform the following steps:

1. Press the "Retrieve K-Factor Backup" button. A confirmation screen will appear with a prompt to proceed or terminate the retrieval.
2. Press "yes" to retrieve the last backup.
3. Click "OK" or "Apply" to save the retrieved settings to the configuration file. Because the retrieval of these settings represents a change to the current K-Factor settings, you will again be prompted to copy the previous settings to backup.

Gas Volume Correction (Supercompressibility Calculation)

Gas turbine meters are calibrated in actual cubic feet (ACF), and measure gas in actual cubic feet. In some applications, a user may benefit from referencing gas measurements back to standard conditions by measuring in terms of standard cubic feet (SCF). The MC-III WP makes this process quick and easy, by using fixed average values for the flowing gas temperature and flowing gas pressure.

By default, this option is disabled.

To access this feature, check the "Enable volume correction" checkbox in the Gas Correction section of the K-Factor screen. The "STANDARD" annunciator on the LCD will illuminate, and all other Gas Volume Correction data fields will be activated (Figure 4.25).

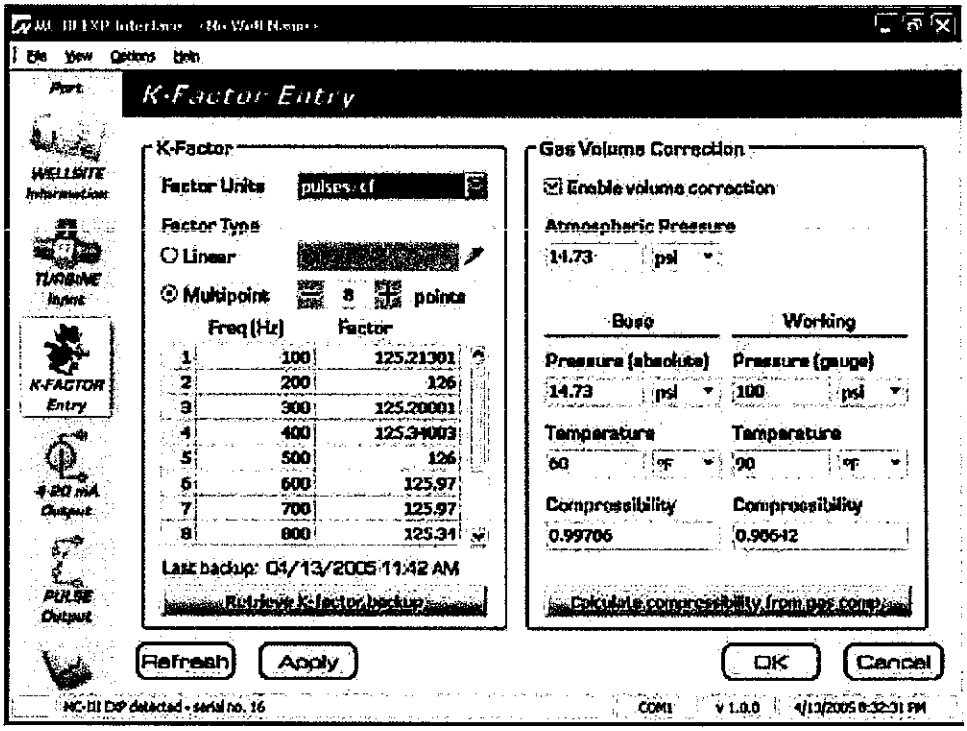

Figure 4.25—Gas volume correction settings on K-Factor Entry screen

Atmospheric pressure is set at 14.73 psia by default, but can be adjusted to local conditions.

To compensate the gas measurement to standard conditions, complete the following steps:

1. Enter the atmospheric pressure.
2. Enter the base pressure and unit. The base pressure is the pressure to which the gas will be compensated (typically, 14.73 psia).
3. Enter the base temperature and unit. The base temperature is the temperature to which the gas will be compensated (typically, 60°F).
4. Enter the working pressure and unit. The working pressure is the user-entered pressure that represents the average working (flowing) pressure.
5. Enter the working temperature and unit. The working temperature is the user-entered temperature that represents the average working (flowing) temperature.

6. Enter a known compressibility factor, or press "Calculate compressibility from gas comp." to view a selection of gas compositions (Figure 4.26).

    - To automatically calculate the compressibility factor, enter the gas composition and click on "Calculate." The software will calculate flowing gas compressibility in accordance with the AGA-8 detail method.
    - The K-Factor Entry screen will reappear, and the calculated super-compressibility factor will be displayed.

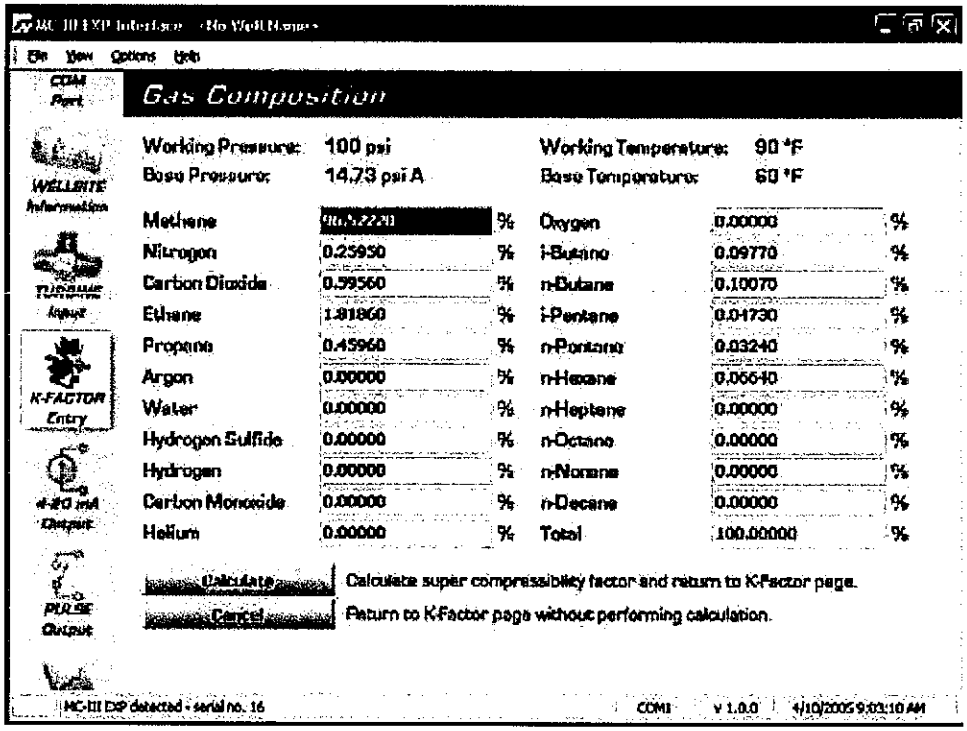

Figure 4.26—Gas Composition screen

4-20 mA Output

WARNING

Do not make or break any connections on the 4-20 mA current loop unless the area is known to be non-hazardous.

Caution: **Before performing any 4-20 mA calibration, ensure that all peripheral equipment connected to the 4-20 mA current loop is either disconnected or disabled. Calibrating and testing the 4-20 mA output feature on the MC-III WP with the peripheral equipment in operation may cause false alarms or erroneous operation of the peripheral device or associated equipment.**

The 4-20 mA Output screen (Figure 4.27) allows users to configure the MC-III WP to provide a 4-20 mA output representing flow rate. Zero and full-scale values can be configured to represent any flow rate range within the range of the flowmeter. A test mode function is also included, allowing a user to calibrate and/or verify the output received by an end device.

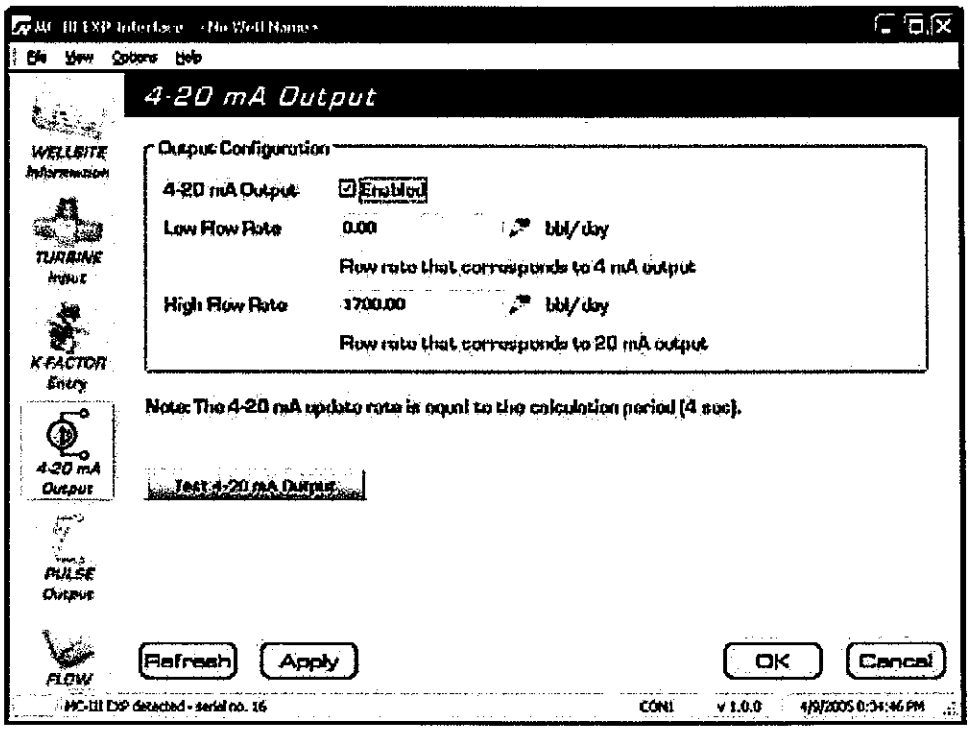

Figure 4.27—4-20 mA Output screen

The low (or zero) setting is the flow rate value that will produce a 4-mA output. The high (or full-scale) setting is the flow rate value that will produce a 20-mA output. Typically, the high value is greater than the low value; this scenario is defined as "direct mode" in *Figure 4.28*, page 66.

Alternatively, users may configure the 4-mA and 20-mA outputs to have an inverse relationship, such that the high value is less than the low value. This scenario is defined as "indirect mode" in *Figure 4.28*, page 66.

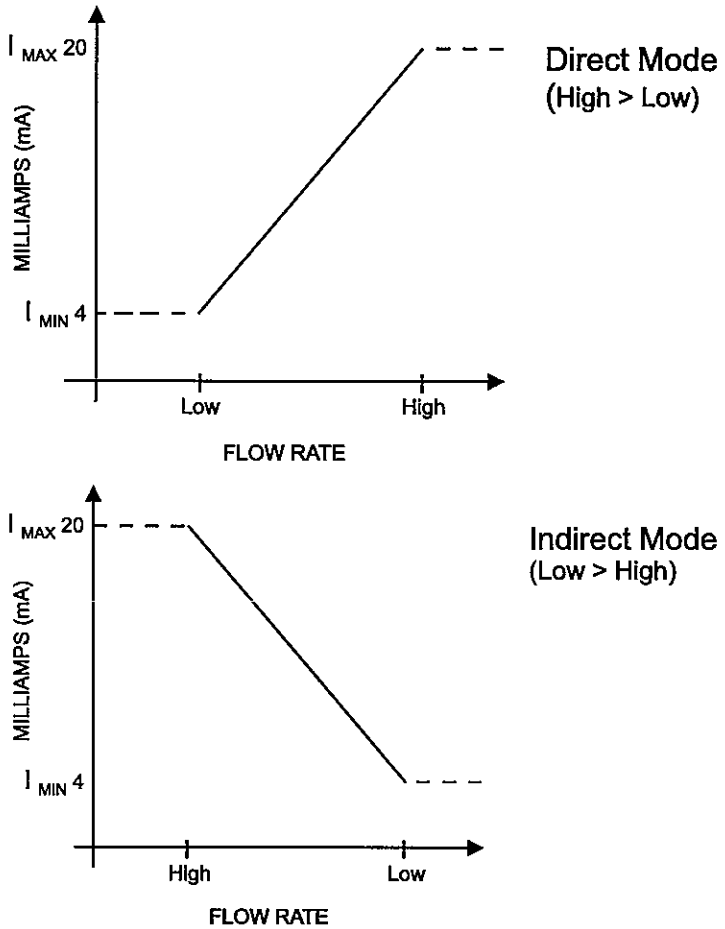

Figure 4.28—Two options for configuring a 4-20 mA output

Flow rates in-between the minimum and maximum rate setpoints will result in an output of current between 4 mA and 20 mA according to the following calculation:

$$I_{OUT} = \frac{[I_{MAX} - I_{MIN}]}{High - Low} \times [RATE_{CURR} - Low] + I_{MIN}$$

Where:

I_{OUT} = output current

I_{MAX} = maximum current output (20 mA)

I_{MIN} = minimum current output (4 mA)

High = programmed flow rate that produces a 20-mA output

Low = programmed flow rate that produces a 4-mA output

$RATE_{CURR}$ = flow rate

Enabling 4-20 mA Output

By default, the 4-20 mA output option is disabled. To enable this feature, perform the following steps:

1. Check the "Enable" checkbox.
2. Click on the pencil icon next to the Low Flow Rate field to launch a data-entry window (Figure 4.29) and enter the "low" or "zero" flow rate value that will produce a 4-mA output. Adjust the decimal position, if necessary, using the slide bar. A flow rate less than or equal to this minimum setpoint will result in an output of 4 mA.
3. Click on the pencil icon next to the High Flow Rate field and enter the "high" or "full-scale" flow rate value that will produce a 20-mA output. Adjust the decimal position, if necessary, using the slide bar. A flow rate equal to or greater than this maximum setpoint will result in an output of 20 mA.

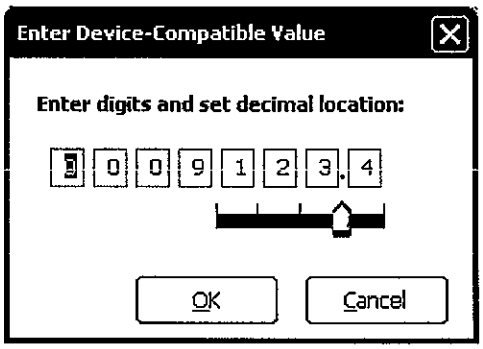

Figure 4.29—Data-entry screen for 4-20 mA low and high values

4-20 mA Output Testing

The MC-III software allows users to test the 4-20 mA output by entering an output current value and reading the live value generated in response.

To use the test mode, press the "Test 4-20 mA Output" button at the bottom of the 4-20 mA Output screen. The test page will appear (*Figure 4.30*, page 68), and the 4-20 mA Output option will be temporarily disabled.

To test the output, enter a value in the Output Current (mA) field, and press "Set Output."

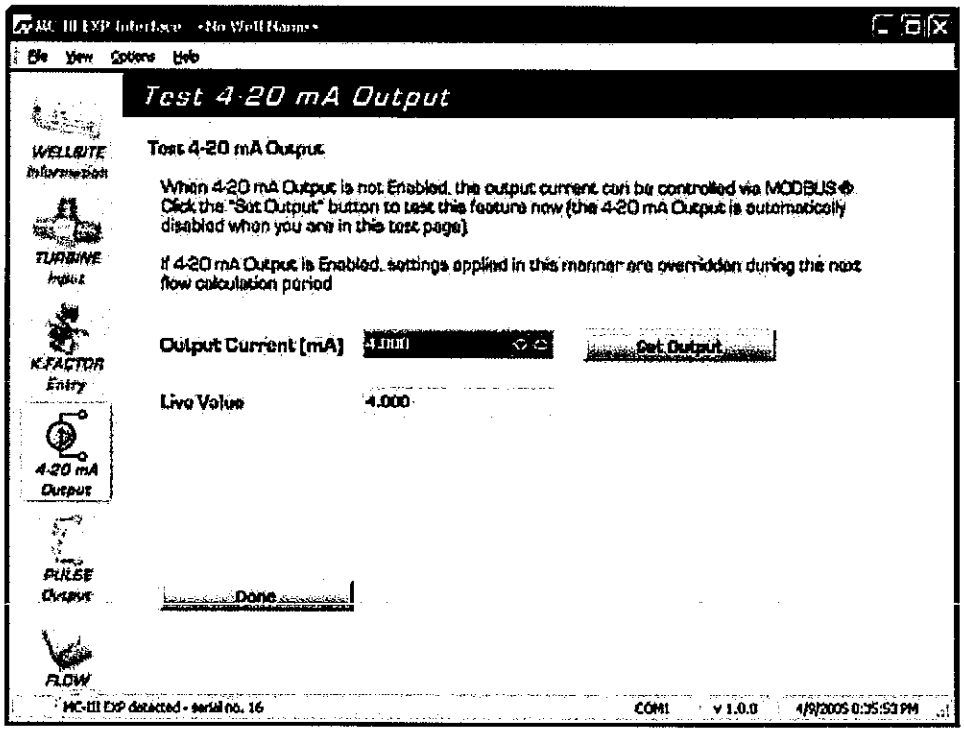

Figure 4.30—4-20 mA output test screen

Pulse Output

The Pulse Output screen (Figure 4.31) allows users to configure the MC-III WP to provide a pulse output representing increments in volume. A test mode function is also included, allowing a user to calibrate and/or verify the output received by an end device.

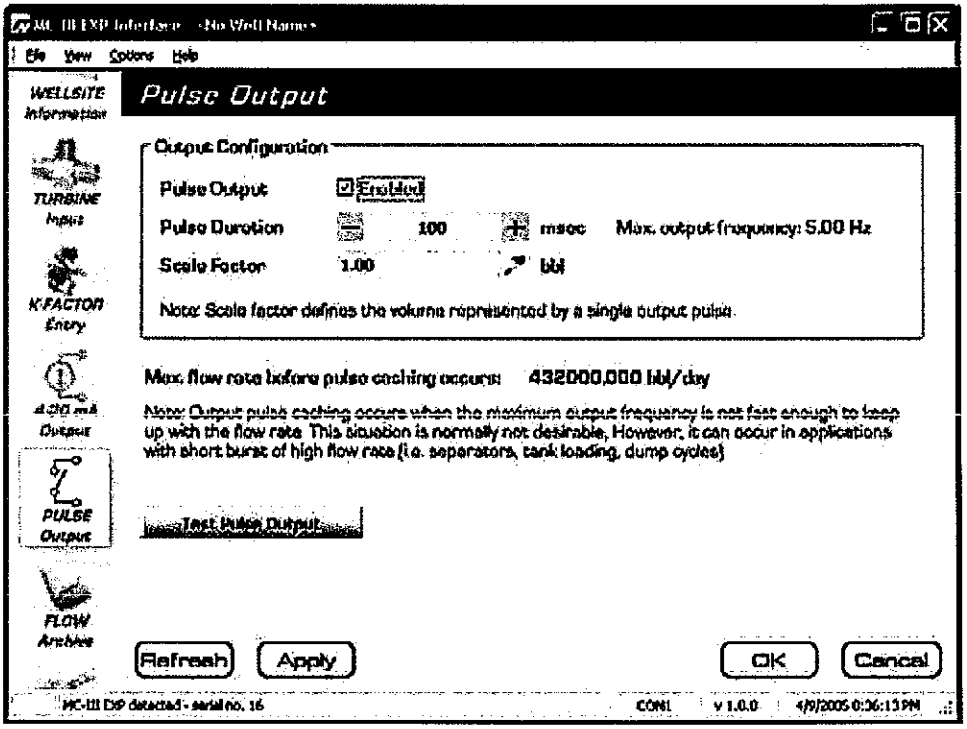

Figure 4.31—Pulse Output screen

Configuring Pulse Output

By default, the pulse output option is disabled to reduce current consumption. To conserve power, do not enable this feature unless it will be used.

To enable the pulse output option, perform the following steps:

1. Check the "Enable" checkbox.
2. Enter the pulse duration value using the "plus" and "minus" buttons on the screen, or the page-up and page-down keys on a computer keyboard. The pulse length (pulse width) determines the length of each output pulse in milliseconds (ms).
3. Click on the pencil icon next to the scale field to open a data-entry window (Figure 4.32), and enter the scale factor. Adjust the decimal position, if necessary, using the slide bar. The scale factor sets the volume increment that will cause a pulse output to occur. The unit for this factor is determined by the unit set for the volume display.

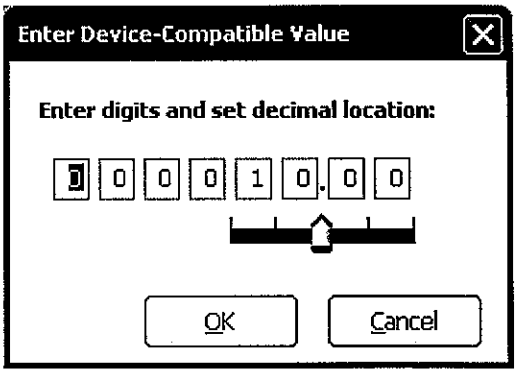

Figure 4.32—Data-entry screen for pulse output scale factor

Note: The scale factor can be any number; it is not limited to powers of 10 (1, 10, 100, etc.).

In applications where high flow rates may occur for extended periods, pulses can be lost due to the instrument's inability to register the flow rate at the maximum output frequency. To avoid the loss of pulses, users can raise the scale factor or shorten the pulse duration. The software calculates the maximum flow rate that can be reached before pulse caching is likely to occur, and displays the information on the Pulse Output screen. In applications where short bursts of high flow rates are common (separators, tank loading, dump cycles, etc.), the displayed flow rate can exceed the maximum flow rate for short periods without compromising the accuracy of the total represented by the pulse output.

Pulse Output Testing

The MC-III software allows users to test the pulse output by writing a value to the pulse accumulator. Such tests can aid in troubleshooting problems with hardware compatibility, threshold settings, and pulse duration settings.

To use the test mode, press the "Test Pulse Output" button at the bottom of the Pulse Output screen. The test page will appear (Figure 4.33), and the Pulse Output option will be temporarily disabled.

To test the output, enter a value in the Pulse Count field, and press "Set Output." The value in the Live Value field will decrement to zero in accordance with the programmed pulse duration.

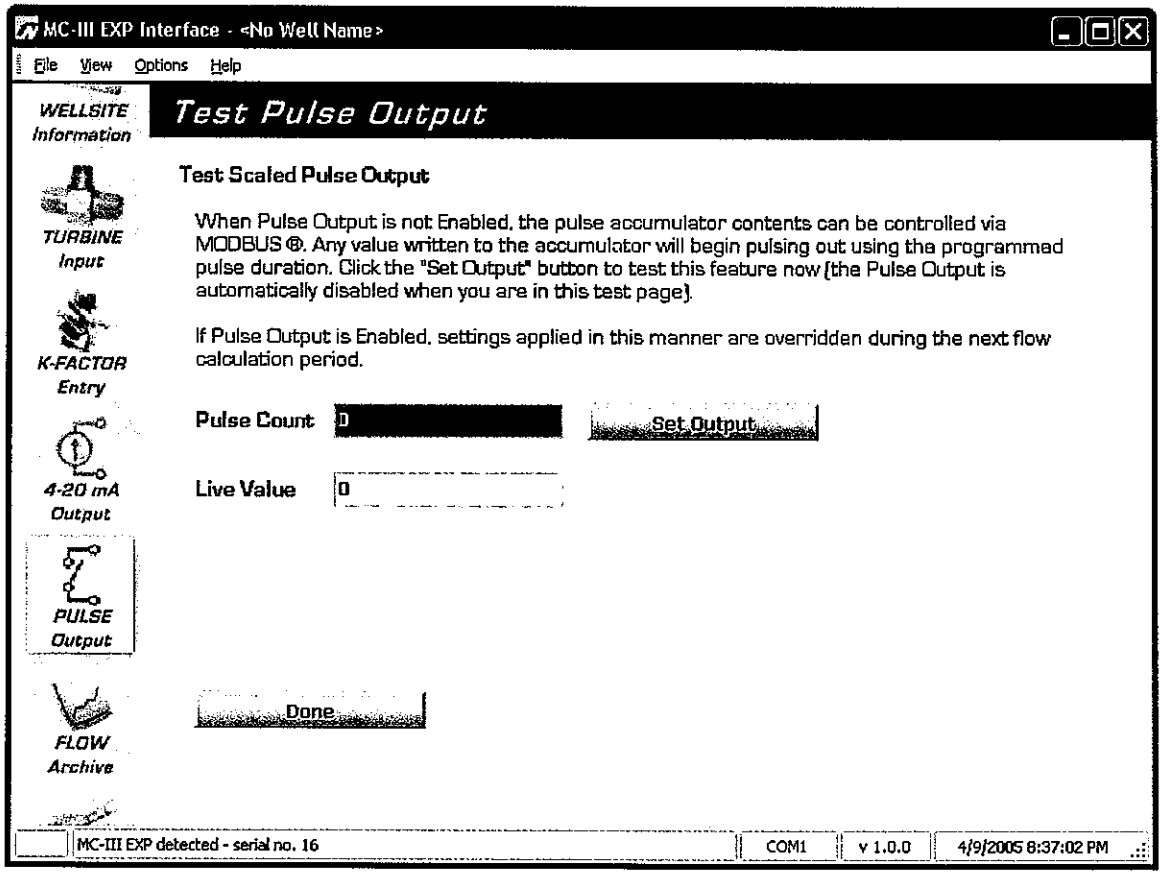

Figure 4.33—Pulse output test screen

Saving and Uploading Configuration Files

The MC-III software allows a user to save configuration settings in a file that is stored on the user's computer and can be uploaded to the MC-III WP as needed. Configuration files are easily identified by the .mc3 extension. The default filename begins with "config" and uses the following structure:

File Format	Filename Structure
.mc3	"config"<date (YYMMDD)> <time (hhmmss)>.mc3 Example: config050209133922.mc3 is a configuration file that was downloaded on February 9, 2005 at 1:39:22 p.m.

Saving a Configuration File

To save current configuration settings for future reference, perform the following steps:

1. Select File>Save Configuration File (Figure 4.34). A "Save MC3 Configuration File" screen will appear, prompting the user to save the file to the computer hard drive. The default directory is C:\NuFlo log data\ MC-III\<WELL NAME>, however the user can specify a new location, if desired.

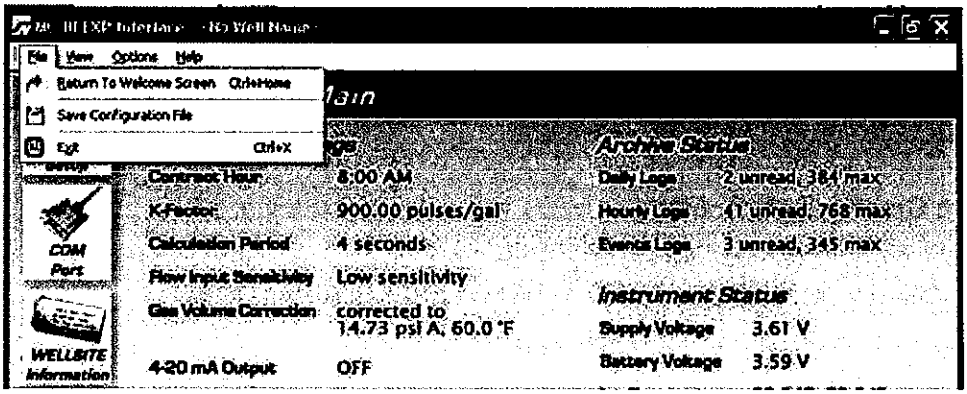

Figure 4.34—File dropdown menu allows user to save a configuration file

2. Click "Save." An "Information" window will appear to confirm that the file has been saved.

The "wellname" folder will bear the well name that appears on the Wellsite Information screen. If no well name is entered on this screen, the folder will be named "NO_WELLNAME" (*Figure 4.35*, page 72).

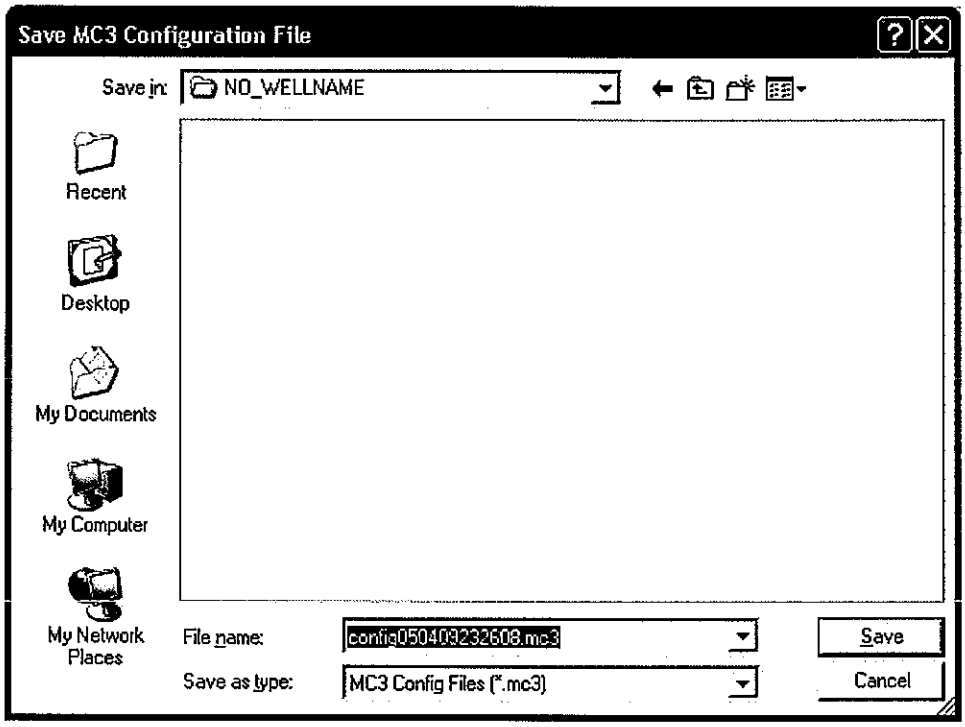

Figure 4.35—Default directory for configuration files

Uploading a Configuration File

To upload a configuration file, perform the following steps:

1. From the Main screen, select File>Return to Welcome Screen (Figure 4.36).
2. Click on the LCD to connect to the MC-III WP.
3. Click "Upload a configuration" (*Figure 4.37*, page 73) and click "Do It Now." A "Load MC3 Configuration File" window will appear (*Figure 4.38*, page 73), displaying the contents of the configuration folder.
4. Click on the appropriate well name folder, select the configuration file of your choice, and click "Open." A "Progress" window will appear momentarily, followed by an "Information" window confirming the upload.

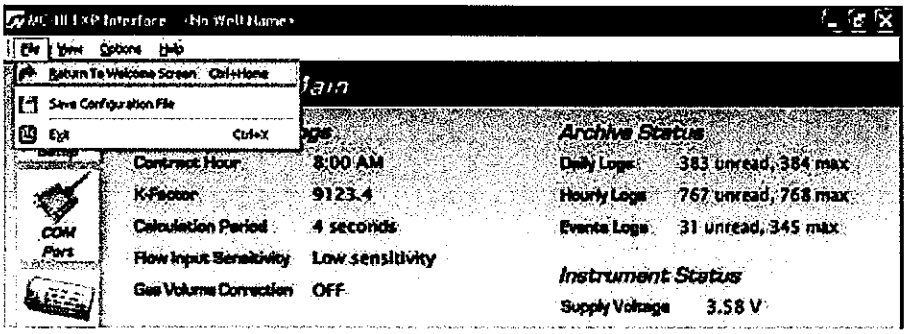

Figure 4.36—File dropdown menu allows user to return to the Welcome screen

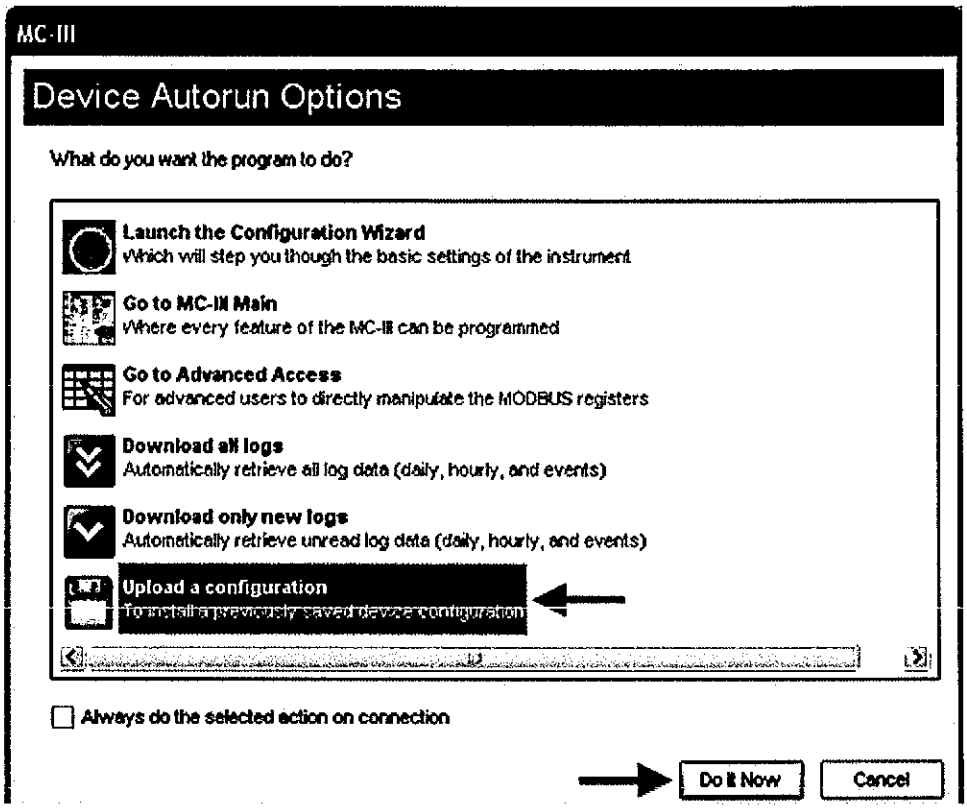

Figure 4.37—Upload a Configuration option

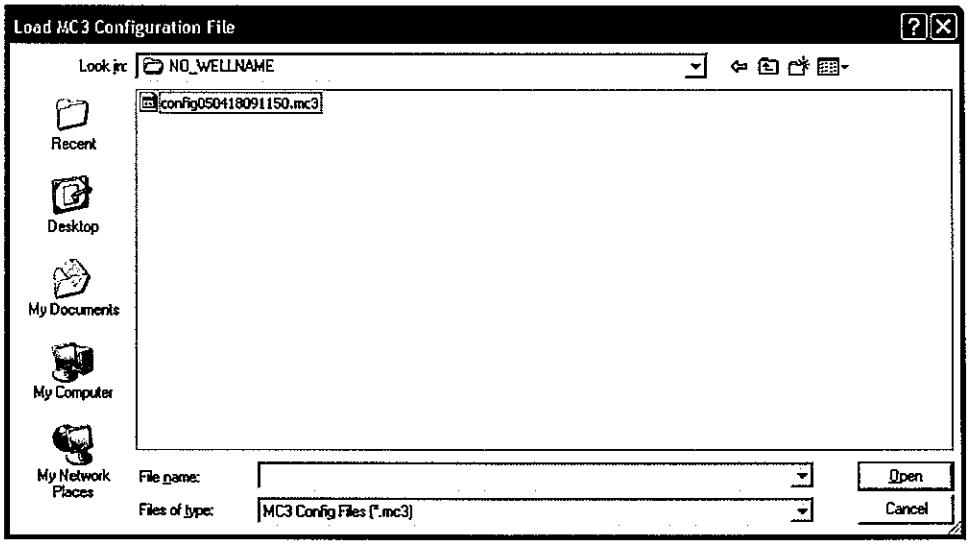

Figure 4.38—Default directory for configuration files

Advanced Access

System configurators and host programmers can also access the software through the Advanced Access menu (Figure 4.39). This option provides access to the Modbus® registers for the MC-III WP. A series of tabs on the right side of the screen (real time, input configuration, output configuration...) allows the user to view a specific group of registers, or to view all registers in one list.

Important: The Advanced Access option is not required for the routine operation of the MC-III WP, and novice users should not access this portion of the software unless instructed to do so by Cameron technical support personnel.

Data retrieved from the MC-III WP while in Advanced access mode can be logged to a file by enabling the "Automatically log data polls" checkbox on the Advanced Options screen. The file will include values that are retrieved from the instrument when the user clicks the "Get All Data" button or enables "Auto Polling" on the Advanced Access screen. See also *Automatic Data Logging*, page A-6.

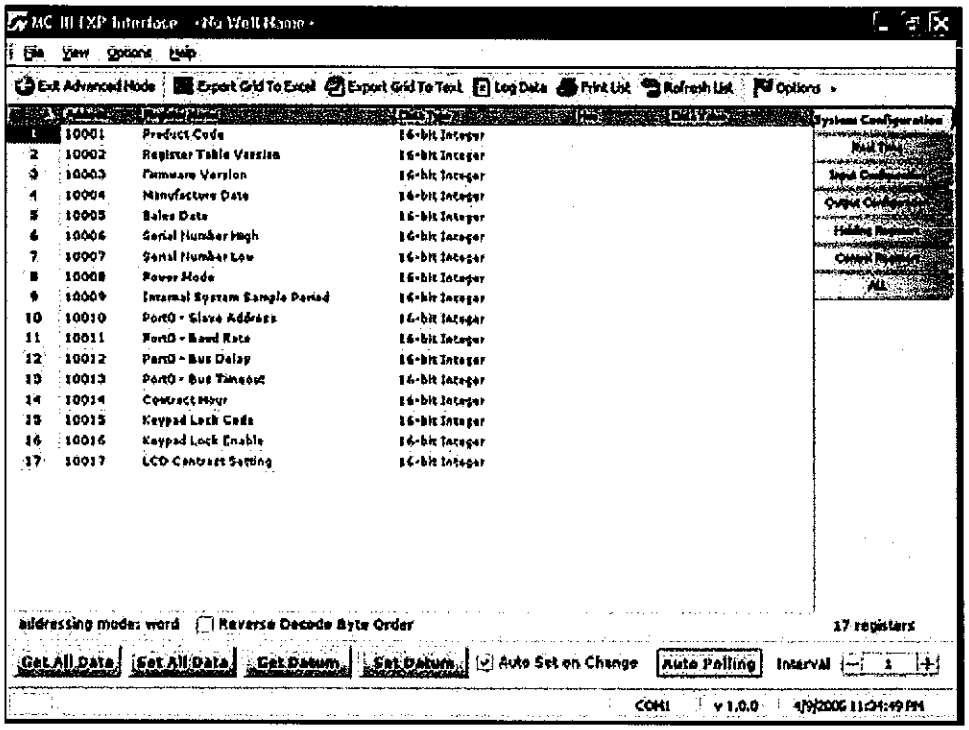

Figure 4.39—Advanced Access screen

Section 5—Flow Logs and Event Logs

The MC-III™ WP's flow archive expands the user's ability to track flow volume over time by allowing the user to view flow data in tabular and trend formats, to save or print log data in reports, and to export log data into a spreadsheet. Additionally, an event archive allows users to identify changes to configuration parameters and other settings for troubleshooting operational issues.

A user can download logs from the Flow Archive and Event Archive screens as needed, or configure the software to automatically download the logs upon connection with the instrument. See *Automating Functions on Software Startup*, page 41, for more information.

When the "download all logs" or "download only new logs" option is selected from the Device Autorun Options menu and the "Always do..." checkbox is checked, the software will download both flow logs and event logs each time the software connects to the MC-III WP (Figure 5.1).

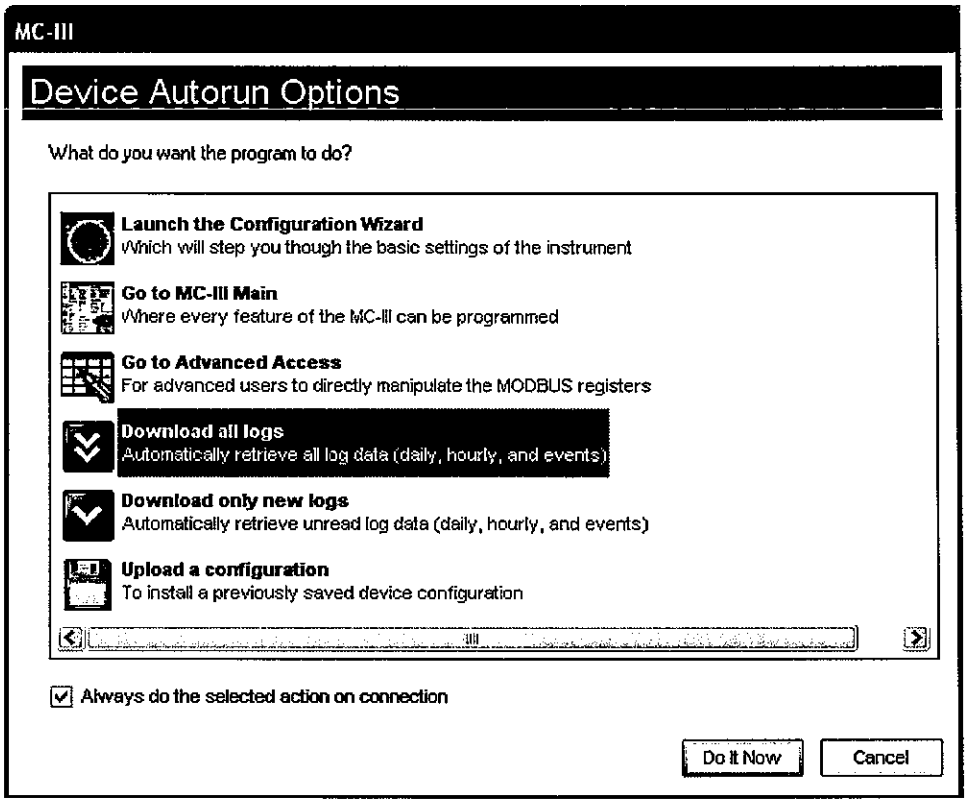

Figure 5.1—Device Autorun Options screen allows automated log downloads with every connection

Auto-Save Log Formats

The MC-III WP automatically saves daily flow logs on the contract hour, and saves hourly flow logs around the clock. The instrument also automatically saves an event log each time a user change is made. After downloading these logs from the instrument, the software saves the data in a file. By default, the logs are saved as .csv files.

The file format of the auto-save flow log and event log files is user-configurable. To save logs in Excel (.xls) format, click Options>Program Options in the task bar, select Downloading from the dropdown options list, and check the "XLS-MS Excel File" checkbox (Figure 5.2).

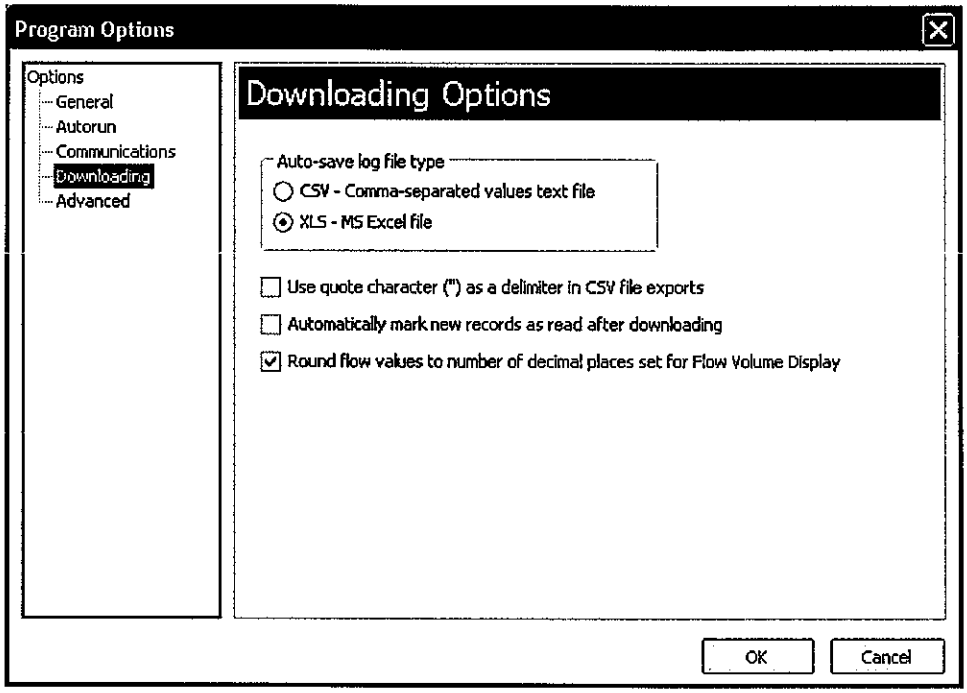

Figure 5.2—Log download options

Log Directory and Filenames

Auto-save log files are saved in C:\NuFlo log data\MC-III\<WELL NAME>. The "wellname" folder will bear the well name that appears on the Wellsite Information screen. If no well name is entered on this screen, the folder will be named "NO_WELLNAME."

Log filenames incorporate the serial number of the MC-III WP, the date, the time, and a capital letter indicating the log type, as shown below.

File Format	Filename Structure
.xls or .csv	<Serial number>_<date (YYYYMMDD)>_<time (hhmmss)>_<log type indicator> where the log type indicator is "H" for hourly, "D" for daily, or "E" for event Example: 16_20050302_102031_H.xls is an hourly log file from the MC-III WP serial number 16 that was downloaded on March 2, 2005 at 10:20:31 AM.

Flow Archive

The MC-III WP automatically saves daily flow logs on the contract hour, and hourly flow logs. The Flow Archive screen (Figure 5.3) allows users to download, view, and print trend charts, and export daily and hourly logs. On the Flow Archive screen, users can view up to 384 daily logs and 768 hourly logs in tabular format (note the Daily Logs and Hourly Logs tabs at the bottom of the screen), or in a trend chart (see Daily Trend and Hourly Trend tabs).

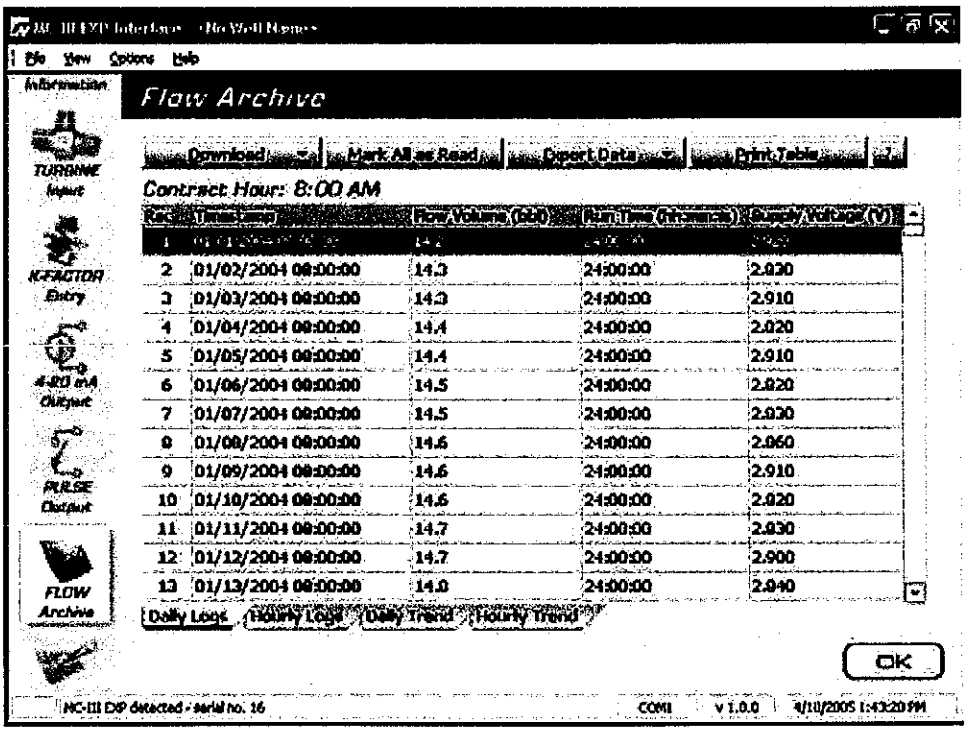

Figure 5.3—Flow Archive screen

Downloading Flow Logs

To download flow logs, click the "Download" button on the Flow Archive screen, and select either Download All Flow Logs or Download Only New Flow Logs (*Figure 5.4*, page 78). (Download Only New Flow Logs will display only flow logs that have been created since the last download was performed.) Tabular views of the archive record (*Figure 5.5*, page 78) include a time stamp showing the exact time each log was recorded, as well as flow volume, run time, and supply voltage. Trend views (*Figure 5.6*, page 79) show the flow volume and time stamp only.

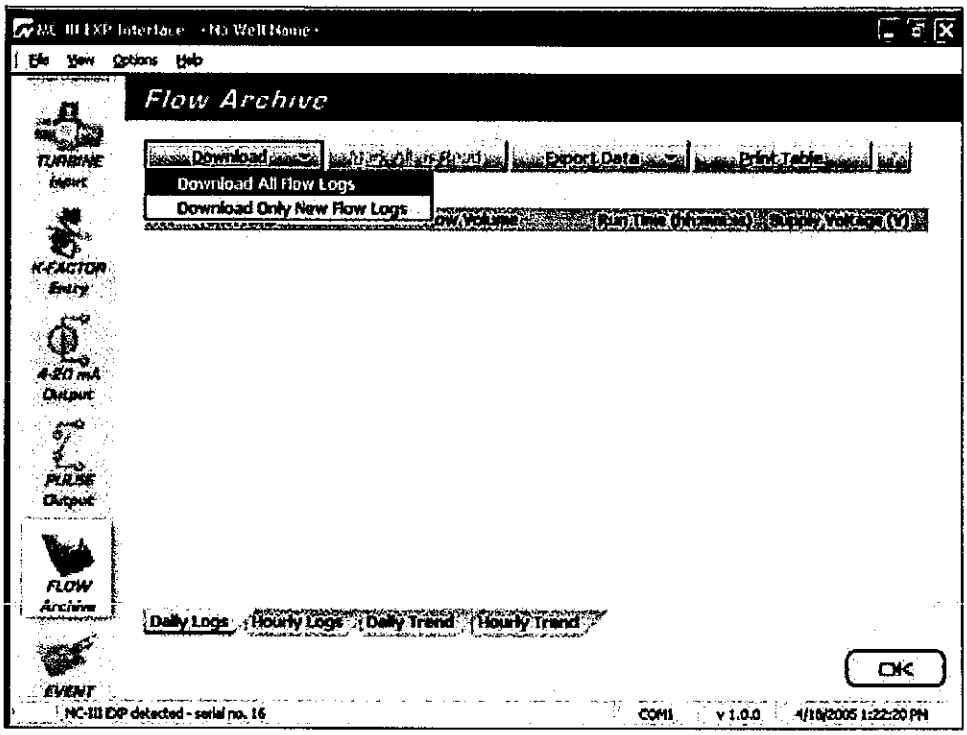

Figure 5.4—Menu for downloading flow logs from the Flow Archive screen

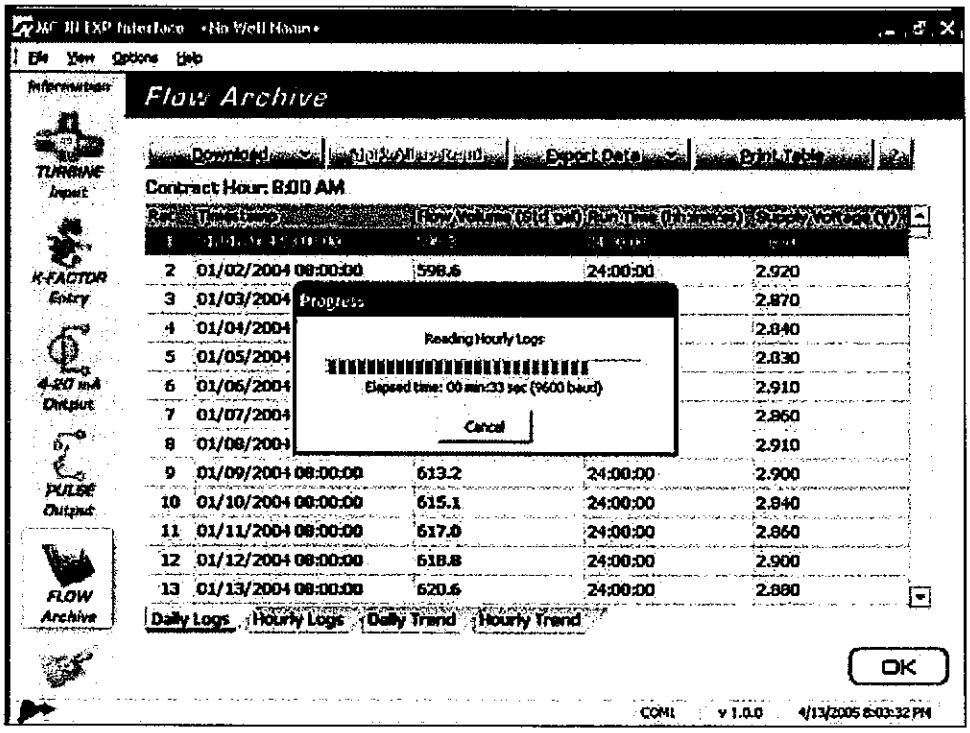

Figure 5.5—Downloaded flow logs (tabular view)

Viewing Trend Charts

In the daily and hourly trend views, flow volumes are charted on a grid, with flow record numbers forming the horizontal axis, and flow volumes shown on the vertical axis. A graphical line defined by two yellow endpoints represents the range of archived logs available for viewing. A yellow triangle marks the first record, and a yellow circle marks the final record. The arrowhead cursor is paired with a dotted circle. As the user drags the cursor across the chart, the circle's position corresponds with the record displayed at the top of the screen (Figure 5.6). The circle's snap function allows the user to pinpoint transitional points within the trend display; the greater the zoom, the more precise the navigation.

Important: The interactive cursor cannot be turned off.

- To zoom in, left-click and drag the mouse to the right and down.
- To zoom out, drag the mouse up and to the left.
- To reposition the chart within the viewing window, right-click the chart and move the mouse slowly in any direction.
- To exit the page and return to the Main screen, press OK.

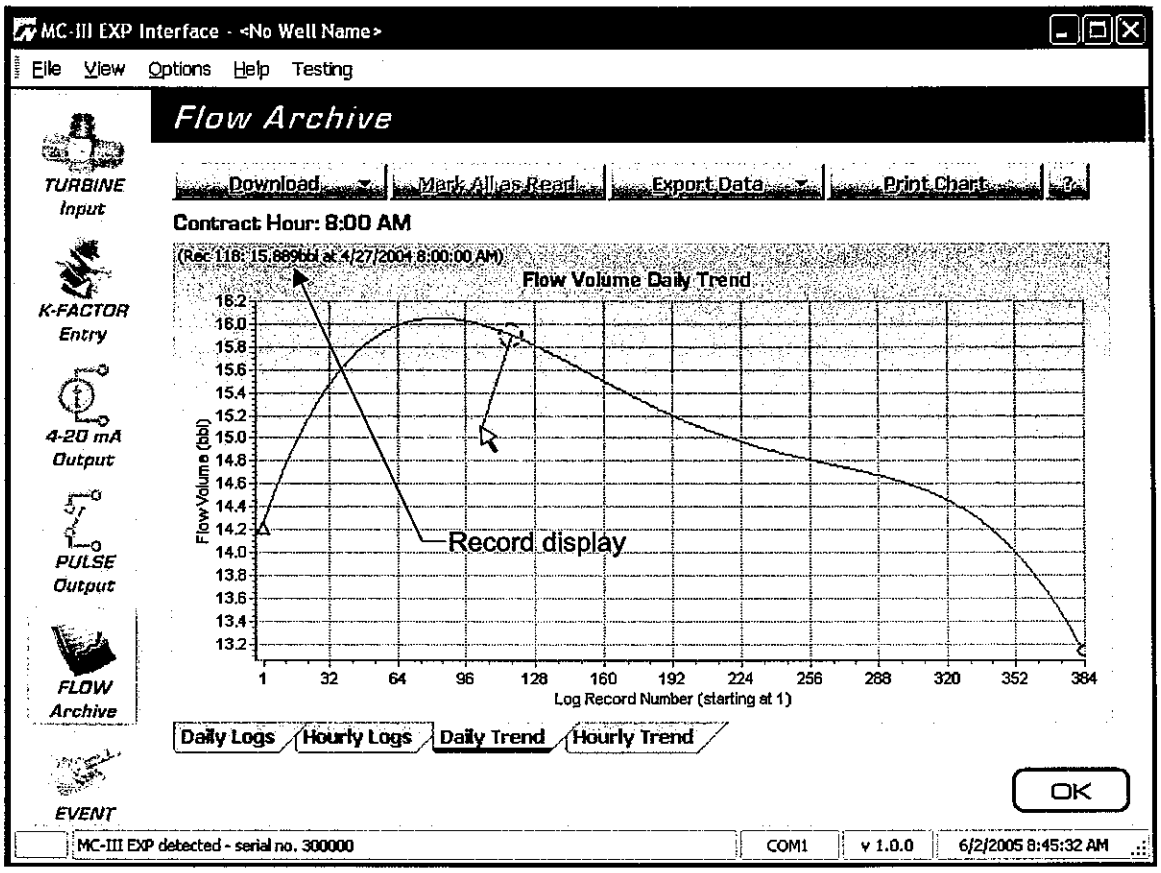

Figure 5.6—Flow Archive screen, trend view

Printing/Saving a Report

A flow log can be printed and/or saved as a table (*Figure 5.7*, page 80) or a trend chart (*Figure 5.8*, page 81).

To print a log, select the appropriate tab at the bottom of the Flow Archive screen, and press the "Print" button in the upper right corner of the Flow Archive screen. (If the display is tabular, the button will read

"Print Table"; if the display is a chart, the button will read "Print Chart.") A Print Preview screen will appear, displaying the image to be printed.

To print the report, select File>Print from the task bar (Figure 5.7).

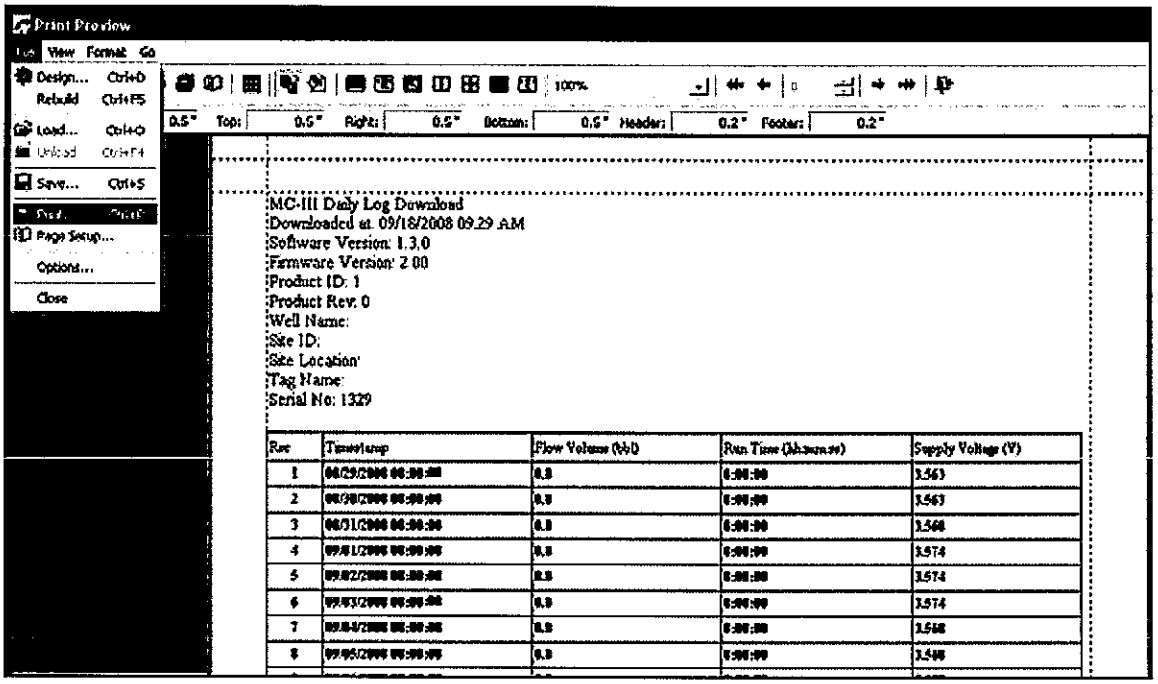

Figure 5.7—Print preview, tabular view

To save the report, perform the following steps:

1. Select File>Save from the task bar (*Figure 5.8*, page 81). A "Save Report As" window will open (Figure 5.9).
2. Enter a filename. The filename extension will be .rps.
3. Click "Save." By default, log archive reports are saved in C:\NuFlo log data\MC-III\<WELL NAME>, however the user can specify a new location, if desired. The "wellname" folder will bear the well name that appears on the Wellsite Information screen. If no well name is entered on this screen, the folder will be named "NO_WELLNAME."

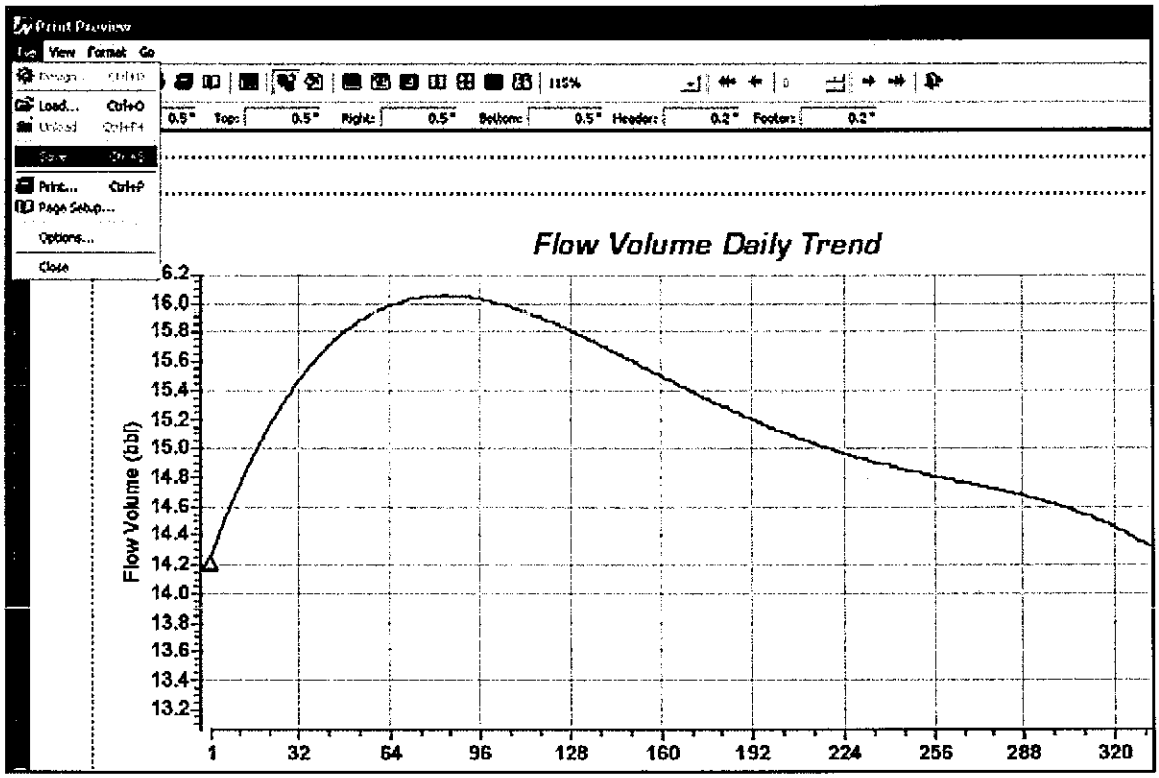

Figure 5.8—Print preview, trend view

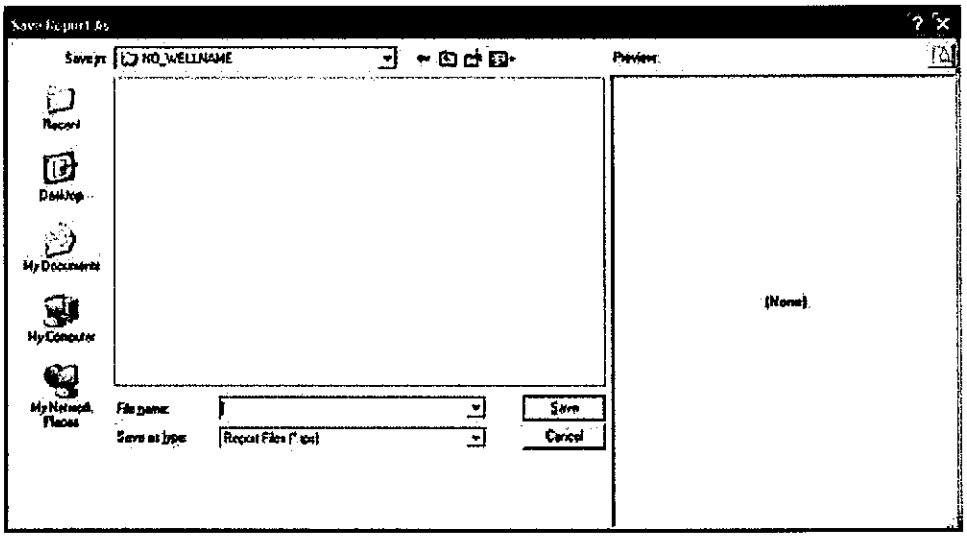

Figure 5.9—Save Report As screen

Viewing a Saved Report

To view a saved report, perform the following steps:

1. From the Flow Archive screen, click "Print Table" (or "Print Chart" for trend chart views) in the upper right corner of the screen.
2. Select File>Load from the task bar at the top of the page (*Figure 5.10*, page 82). A Load Report window will open (*Figure 5.11*, page 82).

3. Click on the report you wish to view. A preview of the report will appear in the right portion of the window.

4. Click "Open."

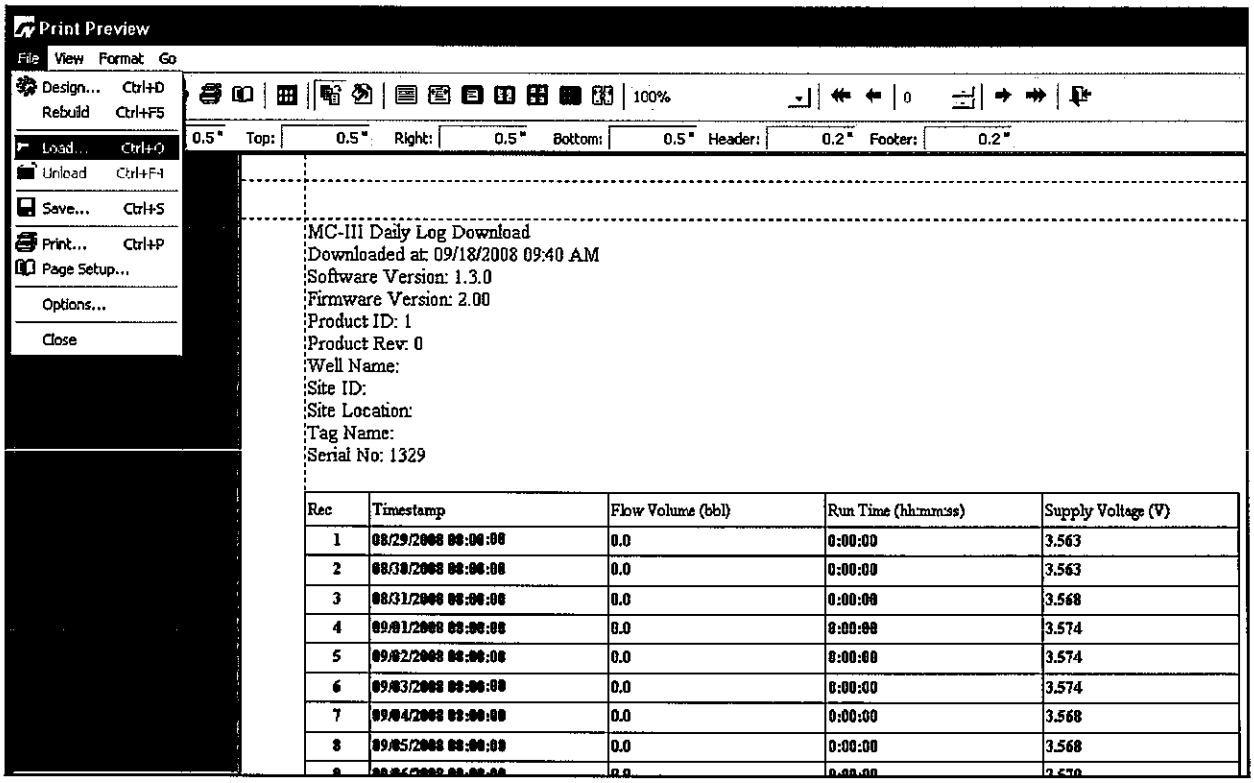

Figure 5.10—Menu for loading a saved report

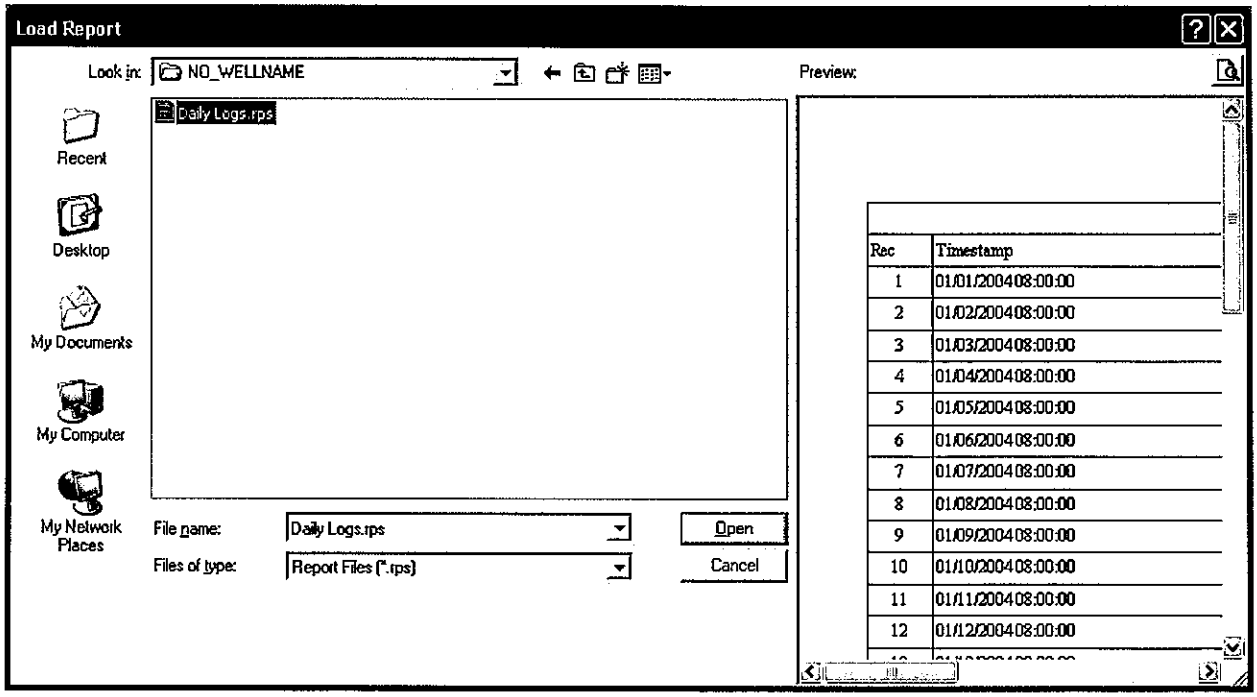

Figure 5.11—Load Report screen for viewing saved flow log reports

Exporting Flow Logs

Flow logs can be directly exported to an .xls or .csv file for ease in viewing and distributing. To export a file, perform the following steps:

1. Click the "Export Data" button near the top of the Flow Archive screen and select the .xls or .csv format (Figure 5.12).
2. When the "Export Daily (or Hourly) Log Data..." window appears, click "Save." By default, exported logs are saved in C:\NuFlo log data\MC-III\<WELL NAME>, however the user can specify a new location, if desired (*Figure 5.13*, page 84). The "wellname" folder will bear the well name that appears on the Wellsite Information screen. If no well name is entered on this screen, the folder will be named "NO_ WELLNAME."

Important: Users can also specify the file format to be used for all auto-save logs (.csv or .xls). To change the auto-save format, follow the procedure described in *Downloading Options*, **page A-5.**

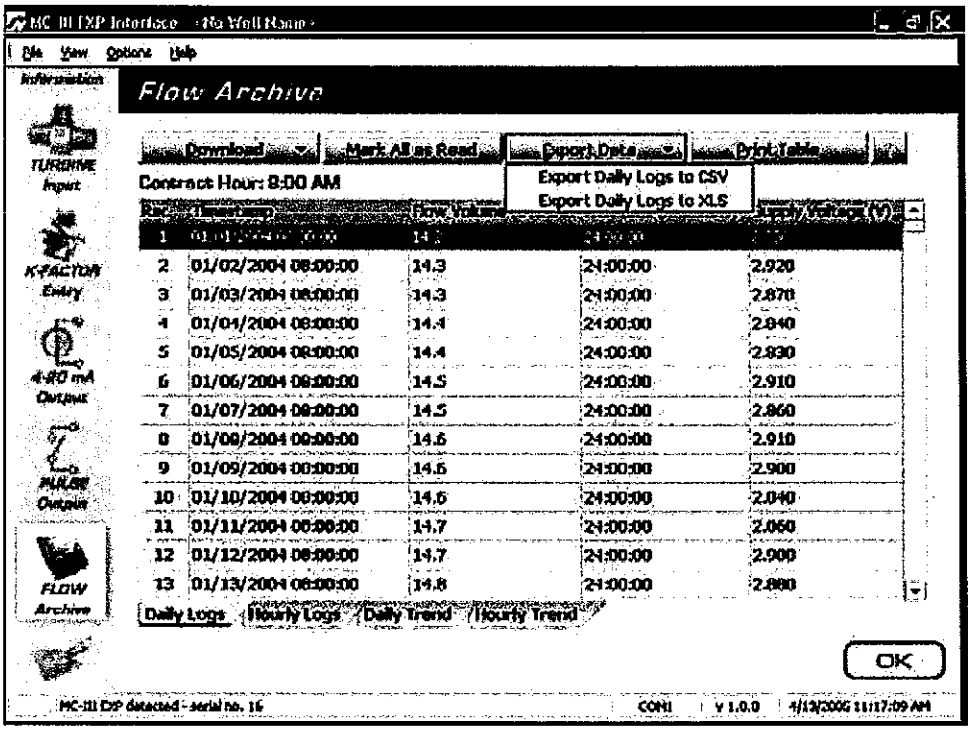

Figure 5.12—Dropdown menu for exporting log data

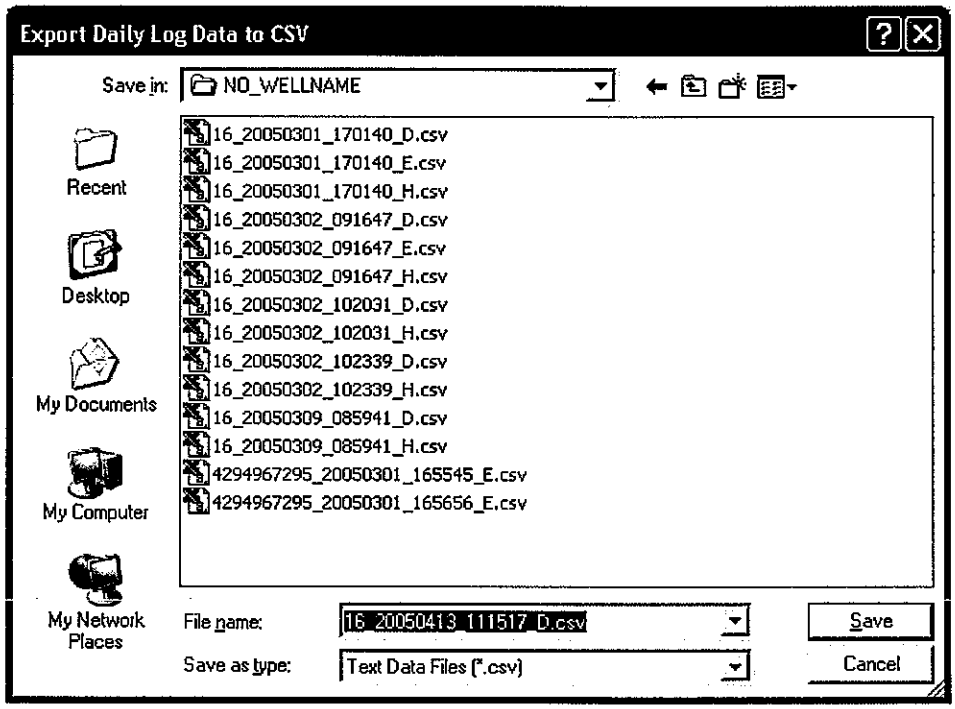

Figure 5.13—Default directory for exported log files

Event Archive

The Event Archive screen (Figure 5.14) allows users to download, view, export, and print up to 345 user event logs. Event logs are generated to track user changes such as K-Factor changes, input setting changes, power-on and "watch-dog" resets, and the flow and frequency cut-off settings.

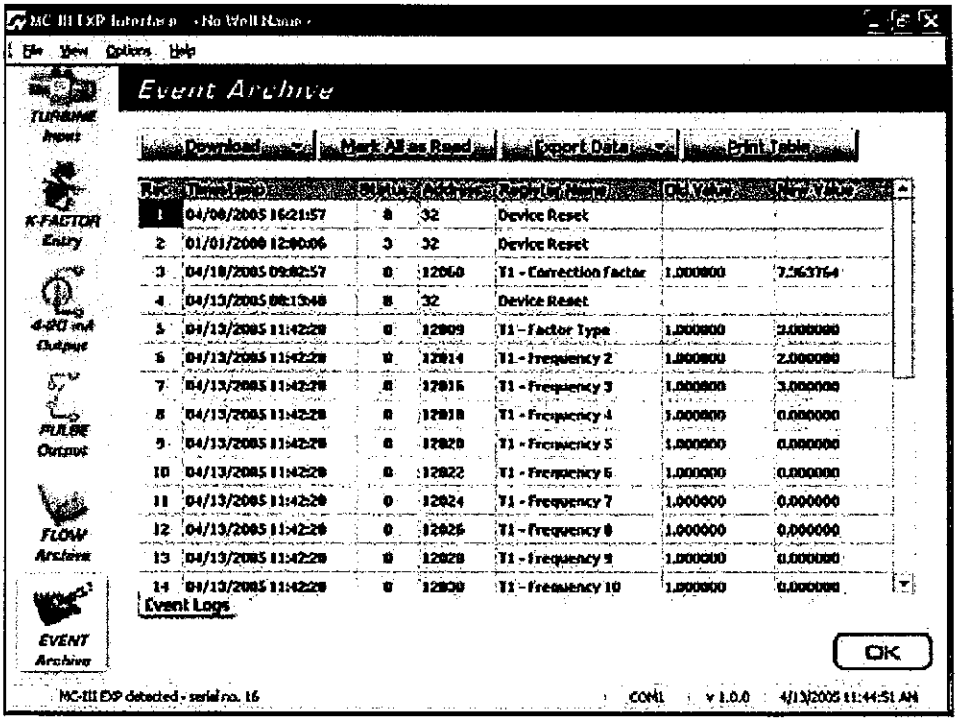

Figure 5.14—Event Archive screen

Downloading Event Logs

To download event logs, click the "Download" button on the Flow Archive screen, and select either Download All Event Logs or Download Only New Event Logs, (Figure 5.15). (Download Only New Event Logs will display only flow logs that have been created since the last download was performed.) Tabular views of the archive record (*Figure 5.16*, page 86) include a time stamp showing the exact time each log was recorded, as well as the name of the register changed, and the old and new values assigned to that register.

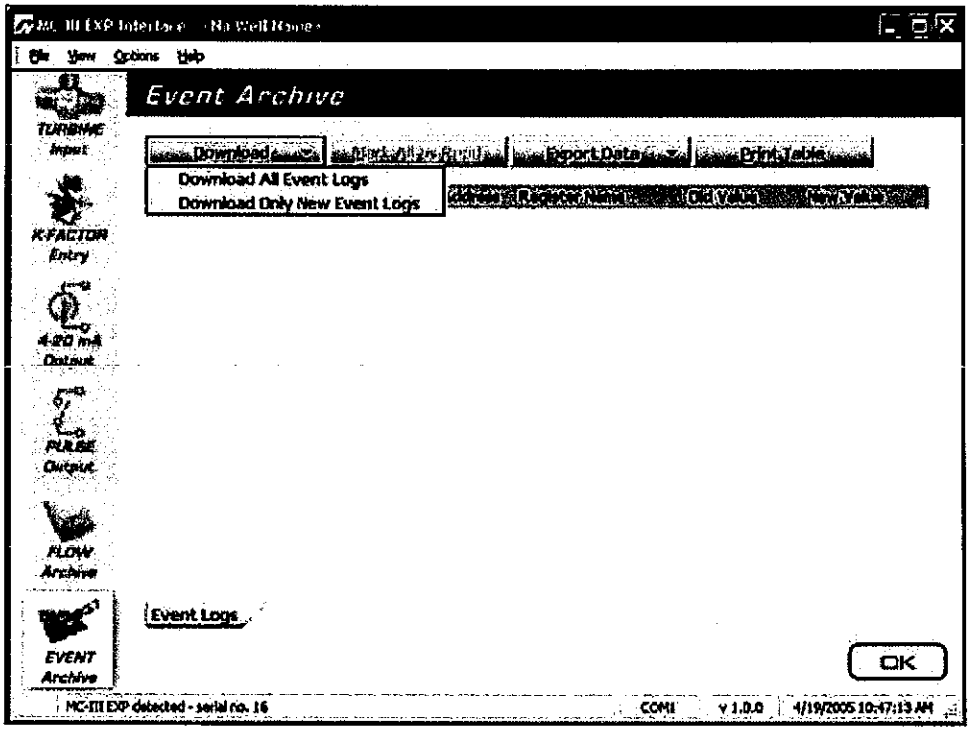

Figure 5.15—Menu for downloading event logs from Event Archive screen

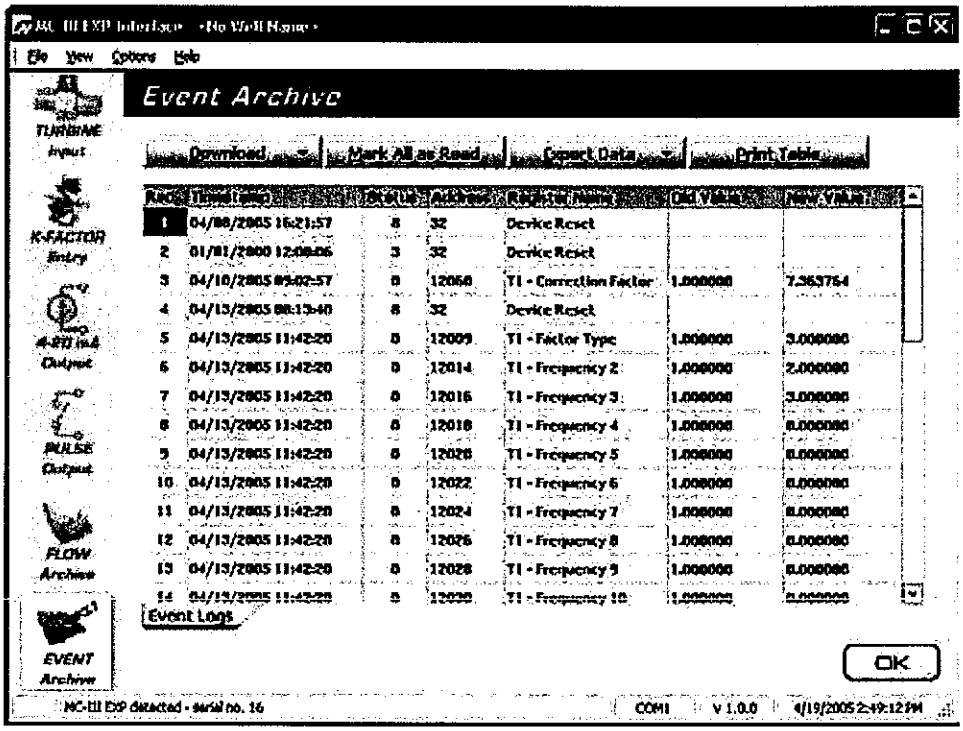

Figure 5.16—Downloaded event logs

Printing/Saving a Report

To print an event log, press the "Print Table" button in the upper right corner of the Event Archive screen. A Print Preview screen will appear, displaying the image to be printed.

To print the report, select File>Print from the task bar.

To save the report, perform the following steps:

1. Select File>Save from the task bar. A "Save Report As" window will open.
2. Enter a filename. The filename extension will be .rps.
3. Click "Save." By default, log archive reports are saved in C:\NuFlo log data\MC-III\<WELL NAME>, however the user can specify a new location, if desired.The "wellname" folder will bear the well name that appears on the Wellsite Information screen. If no well name is entered on this screen, the folder will be named "NO_WELLNAME."

The procedure for printing and saving an event log report is nearly identical to the procedure for printing and saving a flow log report. See the flow log screen captures, *pages 80 through 82*, for reference.

Exporting Event Logs

Event logs can be directly exported to an .xls or .csv file for ease in viewing and distributing. To export a file, perform the following steps:

1. Click the "Export Data" button near the top of the Event Archive screen and select the .xls or .csv format (*Figure 5.17*, page 87).

2. When the "Export Event Logs..." window appears, click "Save." By default, exported logs are saved in C:\NuFlo log data\MC-III\<WELL NAME>, however the user can specify a new location, if desired. The "wellname" folder will bear the well name that appears on the Wellsite Information screen. If no well name is entered on this screen, the folder will be named "NO_WELLNAME."

Important: Users can also specify the file format to be used for all auto-save logs (.csv or .xls). To change the auto-save format, follow the procedure described in *Downloading Options*, **page A-5.**

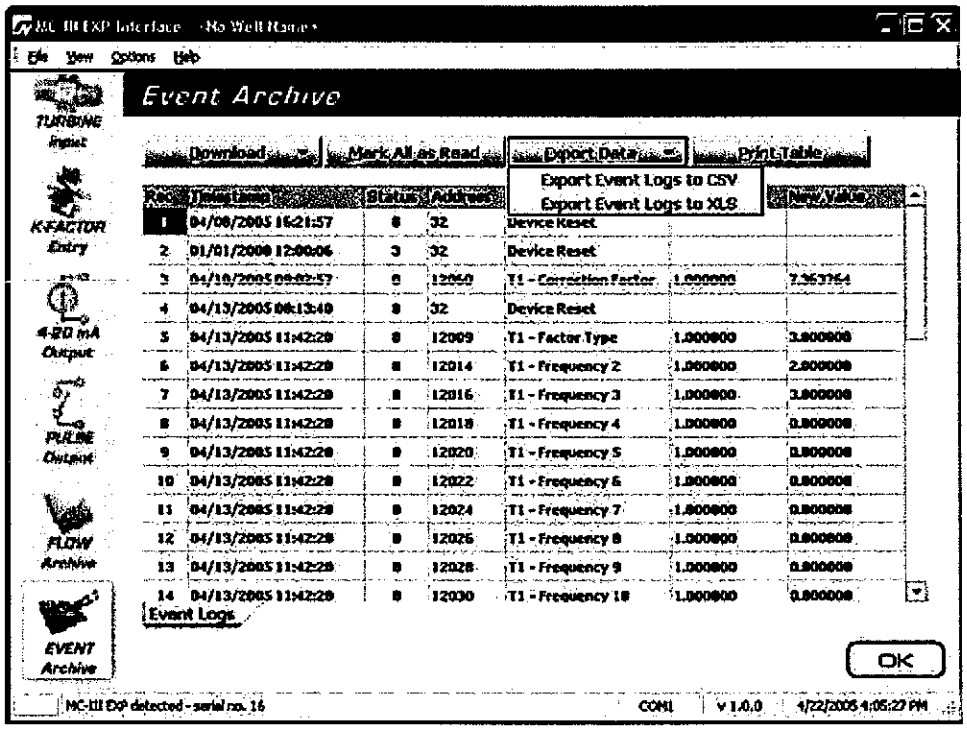

Figure 5.17—Dropdown menu for exporting log data

Section 6 - MC-III WP Maintenance

The MC-III™ WP is designed to provide many years of service with minimal maintenance. Batteries require periodic replacement, and battery life depends on whether battery power is the primary or secondary power source.

All configuration settings are stored in nonvolatile memory; therefore, configuration settings will not be lost in the event of battery failure.

The circuit assembly or keypad may also require replacement over the life of the instrument. Procedures are provided in this section.

Lithium Battery Replacement

The MC-III WP uses a lithium battery with a life expectancy of approximately 2 years. Due to the flat discharge characteristics of the lithium battery, it is difficult to determine how much life remains in a battery at any given time. To preserve configuration and accumulated volume data, replace the battery at 2-year intervals.

WARNING **Do not attempt the replacement of the lithium battery unless the area has been declassified or is known to be non-hazardous.**

WARNING **The lithium battery that powers the MC-III WP is a sealed unit; however, should a lithium battery develop a leak, toxic fumes could escape upon opening the enclosure. Ensure that the instrument is in a well-ventilated area before opening the enclosure to avoid breathing fumes trapped inside the enclosure. Exercise caution in handling and disposing of spent or damaged batteries. See additional information on lithium batteries in** *Appendix B* **of this manual.**

Important: **Press the ENTER/SAVE key on the keypad before replacing the lithium battery to save the accumulated total to nonvolatile memory. Once the battery is replaced and power is restored to the unit, the last saved accumulated total will be displayed in the LCD.**

The lithium battery is secured inside the enclosure by a velcro strap and connected to the circuit assembly via connector J1.

To replace the lithium battery in the MC-III WP, perform the following steps:

1. Open the door of the enclosure to access the lithium battery.
2. Loosen the velcro strap, disconnect the battery from the connector J1 on the circuit assembly, and remove the battery from the enclosure (*Figure 6.1*, page 90). Send the depleted battery to a fully permitted Treatment, Storage and Disposal Facility (TSDF) or to a permitted recycling/reclamation facility, as required by federal regulations (see *Appendix B*).
3. Install the new battery in the enclosure in the same position as the original battery, and secure the velcro strap tightly around the battery.
4. Connect the replacement battery to the J1 connector on the circuit assembly.

5. Close the door of the enclosure and secure the latches.

Important: **The interruption of power to the MC-III WP will cause the internal clock time to be inaccurate. Reset the time via the interactive software. See** *Time/Date Synchronization*, **page 54.**

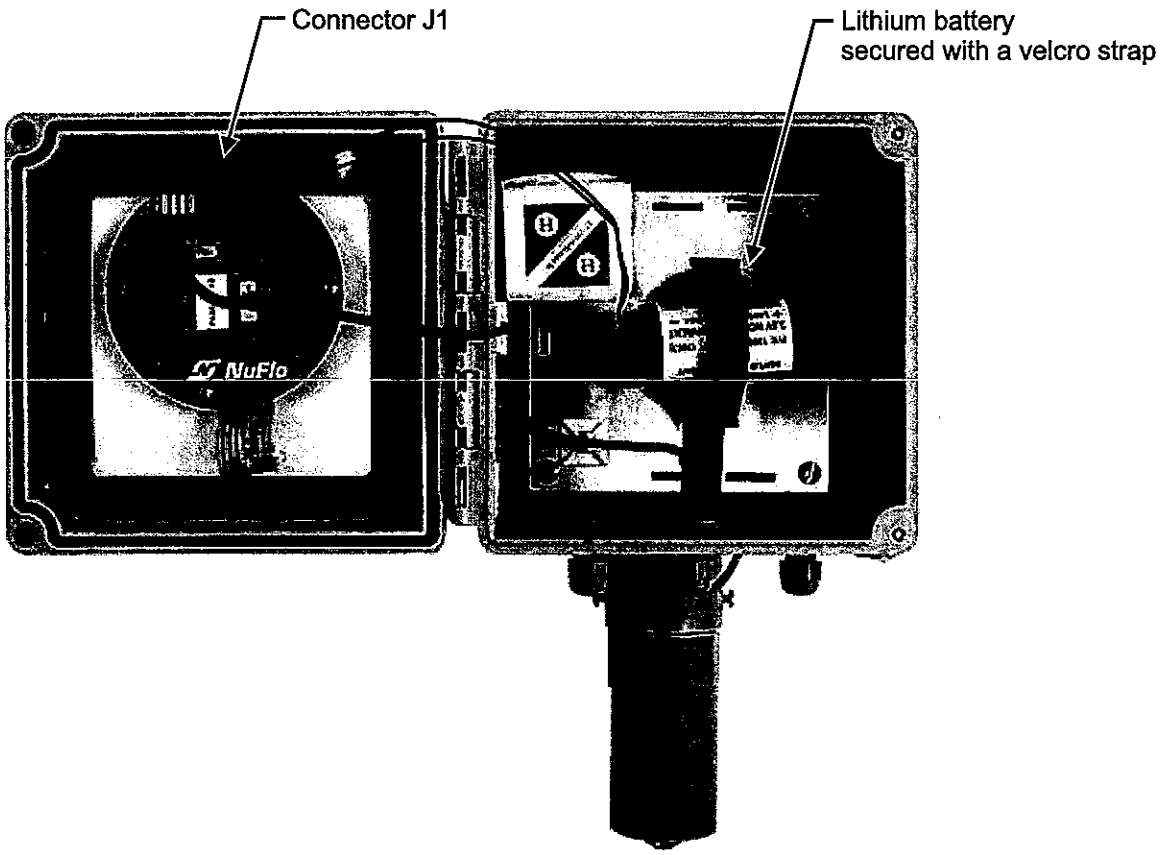

Figure 6.1—Lithium battery replacement

Alkaline Battery Replacement

The alkaline battery powered instrument features a battery holder containing three D-size alkaline batteries. The batteries will require periodic replacement. The dimming of the LCD may be an indicator that battery power is diminishing, and the batteries should be replaced.

WARNING **Do not attempt the replacement of the alkaline batteries unless the area has been declassified or is known to be non-hazardous.**

Important: **Press the ENTER/SAVE key on the keypad before replacing the alkaline batteries to save the accumulated total to nonvolatile memory. Once the batteries are replaced and power is restored to the unit, the last saved accumulated total will be displayed in the LCD.**

The alkaline batteries and battery holder are secured inside the MC-III WP enclosure by two velcro straps and the battery holder is connected to the circuit assembly via connector J1.

To replace the alkaline batteries, perform the following steps:

1. Open the door of the enclosure to access the alkaline battery holder.
2. Loosen the velcro straps and disconnect the battery holder from connector J1 on the circuit assembly.
3. Remove the spent batteries from the holder (Figure 6.2) and dispose of them in accordance with local regulations.

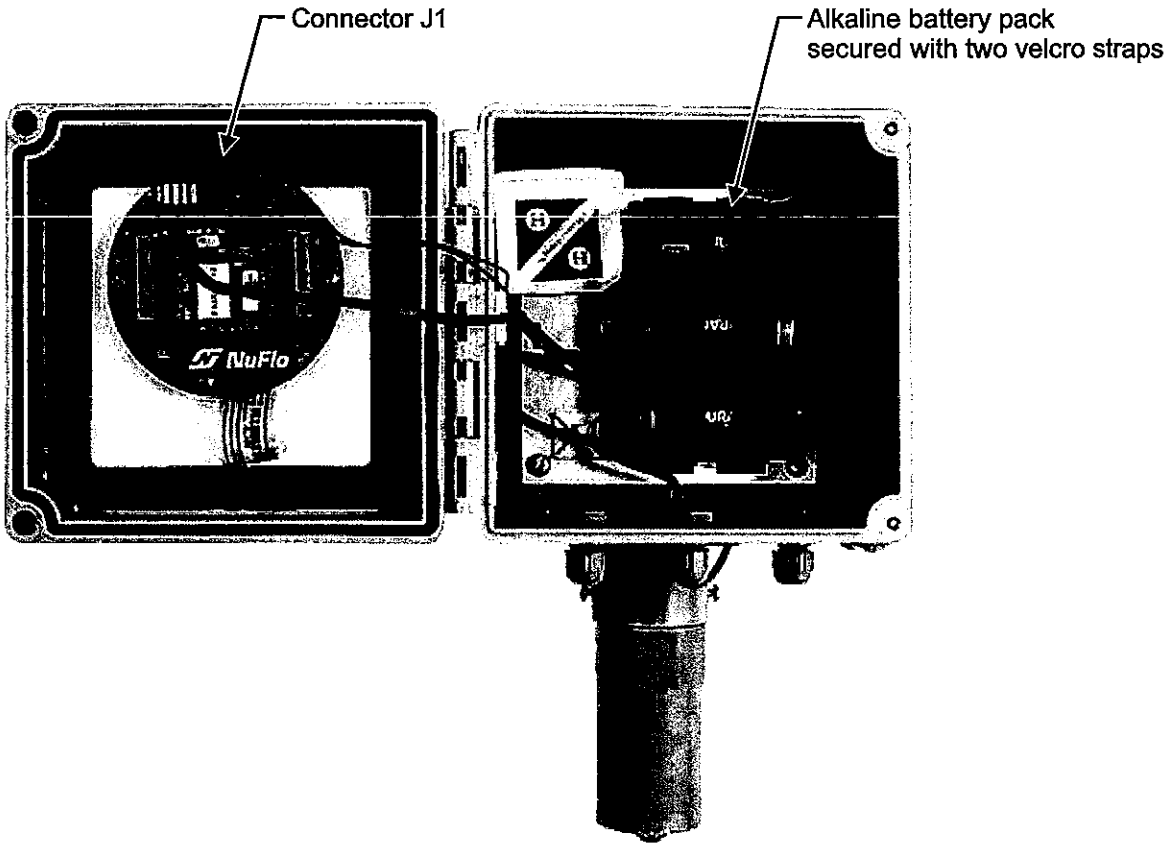

Figure 6.2—Alkaline battery replacement

4. Install three new alkaline batteries in the battery holder, observing polarity, and secure the velcro straps to hold the batteries tightly in place.
5. Reconnect the battery holder to connector J1 on the circuit assembly.
6. Close the door of the enclosure and secure the latches.

Important: The interruption of power to the MC-III WP will cause the internal clock time to be inaccurate. Reset the time via the interactive software. See *Time/Date Synchronization*, **page 54.**

Circuit Assembly Replacement

WARNING **Do not attempt the replacement of the circuit assembly unless the area has been declassified or is known to be non-hazardous.**

Important: **Static electricity can damage a circuit board. Handle new boards only by their edges, and use proper anti-static techniques (such as wearing anti-static wrist strap or touching metal to establish an earth ground) prior to handling a board.**

Important: **If possible, record the accumulated total and all configuration settings before replacing the circuit board. This information can be recorded by hand or captured by saving a configuration file that can be reloaded into the unit after the circuit board is replaced. (See** *Saving and Uploading Configuration Files*, **page 71.)**

To replace the circuit assembly, perform the following steps:

1. Open the door of the enclosure to access the circuit board mounted inside the door.
2. Record the locations of all cable connections to the circuit assembly.
3. Using a small standard blade screwdriver, remove all wiring from terminal blocks TB1, TB2, and TB3, ensuring that all wiring that is connected to powered circuits is insulated with tape.
4. Unplug the battery cable from connector J1 on the circuit assembly.
5. Using a small Phillips screwdriver, remove the three screws from the circuit assembly (*Figure 6.3*, page 93).

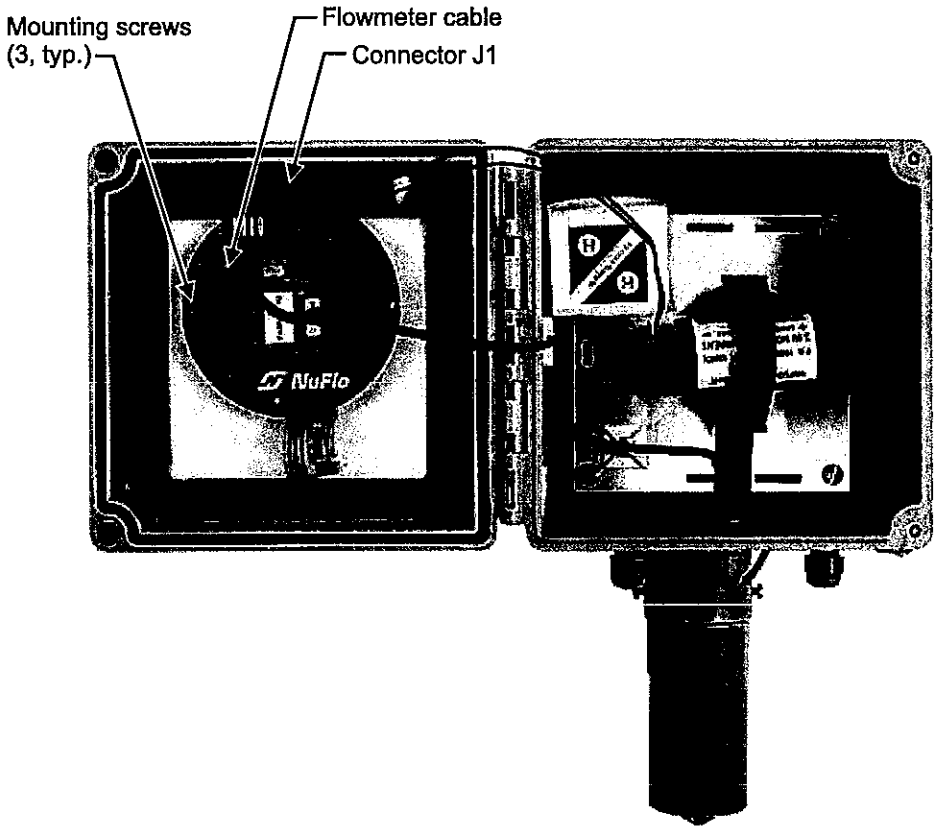

Figure 6.3—Removal of circuit assembly

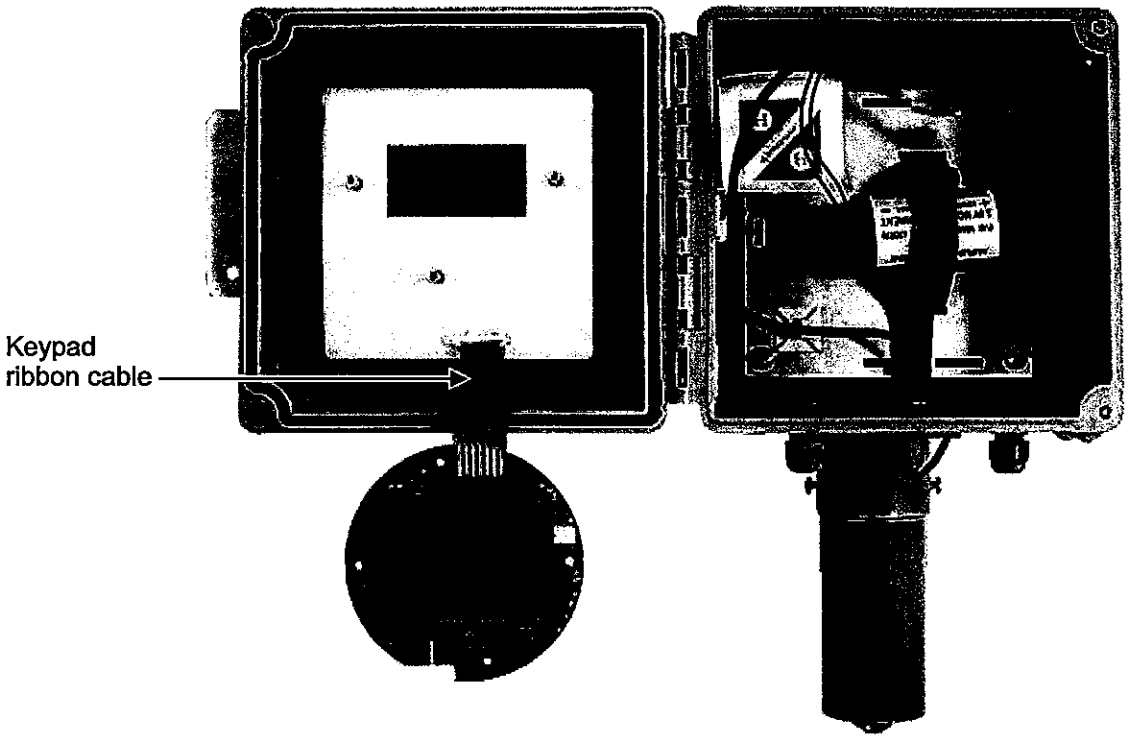

Figure 6.4—Keypad ribbon cable connection

6. Vertically flip the circuit board over to view the opposite side of the board where the LCD is mounted. The keypad ribbon cable will remain attached to the circuit board (*Figure 6.4*, page 93).
7. From the LCD side of the circuit assembly, disconnect the keypad ribbon cable from connector J3 as follows:
   a. Grasp the black clip between a thumb and forefinger (see white arrows in Figure 6.5).
   b. Squeeze both sides of the clip and gently pull to release the clip from the plastic connector that holds it in place. DO NOT PULL on the ribbon cable. When the black plastic clip is properly disengaged, the cable will release freely.
8. Remove the original circuit assembly from the enclosure.
9. Remove the new circuit assembly from any packaging and connect the ribbon cable of the keypad to connector J3 on the LCD side of the circuit assembly as follows:
   a. Insert the end of the ribbon cable into the plastic clip.
   b. While holding the ribbon cable in place, press the black plastic clip into the connector until it snaps.
10. Reconnect the battery cable to connector J1 on the circuit assembly.
11. Center the circuit assembly over the three standoffs on the inside of the enclosure door and secure with the three screws removed in step 5.
12. Reconnect all wiring to terminal blocks TB1, TB2 and TB3.

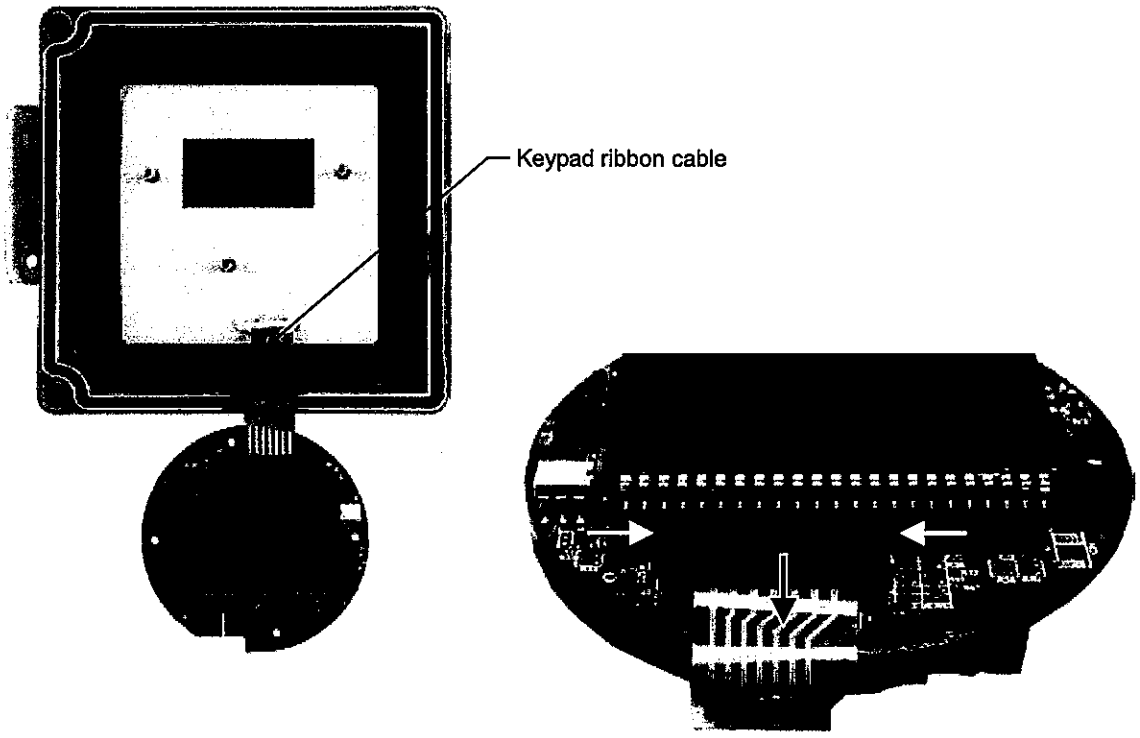

Figure 6.5—To release the ribbon cable from the connector, press in on the side tabs of the connector (white arrows) and gently pull forward (black arrow).

13. Close the door and secure the latches on the enclosure.
14. Recalibrate the MC-III WP.
15. Restore power to the peripheral circuitry.

Keypad Replacement

WARNING **Do not attempt the replacement of the keypad unless the area has been declassified or is known to be non-hazardous.**

The keypad is attached to the circuit board by a ribbon cable that passes from the kepad through a slot in the door and plugs into the LCD side of the circuit board. A silicone rubber sealant is applied to the slot to prevent leakage. Replacement of the keypad requires the operator to remove the old keypad and remove the sealant before installing the new keypad.

To replace the keypad assembly, perform the following steps:

1. Using a small Phillips screwdriver, remove the three screws from the circuit assembly (*Figure 6.3*, page 93).
2. Vertically flip the circuit board over to view the opposite side of the board where the LCD is mounted. The keypad ribbon cable will remain attached to the circuit board (*Figure 6.5*, page 94).
3. From the LCD side of the circuit assembly, disconnect the keypad ribbon cable from connector J3 as follows:
   a. Grasp the black clip between a thumb and forefinger (see white arrows in *Figure 6.5*, page 94).
   b. Squeeze both sides of the clip and gently pull to release the clip from the plastic connector that holds it in place. DO NOT PULL on the ribbon cable. When the black plastic clip is properly disengaged, the cable will release freely.
4. With a sharp instument, remove the sealant from the slot in the door to free the ribbon cable and to provide a clean surface for installing the new keypad.
5. Using a sharp instrument, lift one corner of the keypad and peel it from the front of the enclosure. Discard the keypad and the attached ribbon cable.
6. Clean the viewing window with rubbing alcohol and allow it to dry.
7. Remove the backing paper from the new keypad.
8. Insert the ribbon cable of the new keypad through the slot in the door of the enclosure.
9. Center the keypad in the viewing window of the door and press it into place. Apply light pressure to the entire surface of the keypad to ensure proper adhesion.
10. Apply an electronic-grade sealant (Dow Corning 738 electrical sealant or equivalent) to the slot around the ribbon cable to prevent leakage. Allow it to dry.

Caution: **Never use an acetic acid-based adhesive to seal the ribbon cable slot. Gases released by such products can damage electronics.**

11. Connect the keypad ribbon cable to connector J3 on the LCD side of the circuit assembly as follows:
    a. Insert the end of the ribbon cable into the plastic clip.
    b. While holding the ribbon cable in place, press the black plastic clip into the connector until it snaps.
12. Reconnect the circuit assembly to the standoffs inside the door using the three screws that were removed from the circuit board in step 1.
13. Close the door and secure the latches on the enclosure.

Firmware Update

WARNING **Do not attempt the installation of new firmware unless the area has been declassified or is known to be non-hazardous.**

Before installing new firmware or moving the instrument to a new site, it is recommended that the user clear the EEPROM, which will erase all configuration settings and log data. To clear the EEPROM, choose Options/Program Options from the menu bar, select Advanced from the dropdown options list, and click on the "Clear EEPROM" button (Figure 6.6).

Technical assistance is typically required for upgrading firmware. Contact Cameron's Measurement Systems Division to arrange for an upgrade.

WARNING **Clicking the "Clear EEPROM" button will delete all configuration settings and log records in the MC-III WP memory.**

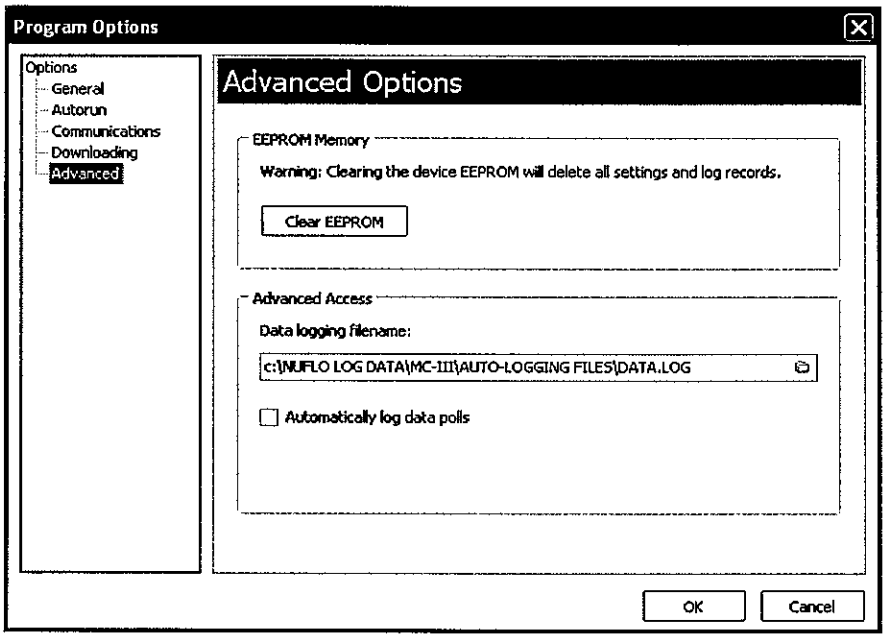

Figure 6.6—EEPROM clearing and automatic data log option

Spare Parts List

WARNING

EXPLOSION HAZARD—SUBSTITUTION OF COMPONENTS AND/OR THE USE OF EQUIPMENT IN A MANNER OTHER THAN THAT SPECIFIED BY CAMERON MAY IMPAIR SUITABILITY FOR CLASS I, DIVISION 2. CAMERON BEARS NO LEGAL RESPONSIBILITY FOR THE PERFORMANCE OF A PRODUCT THAT HAS BEEN SERVICED OR REPAIRED WITH PARTS THAT ARE NOT AUTHORIZED BY CAMERON.

DO NOT DISCONNECT EQUIPMENT UNLESS POWER HAS BEEN SWITCHED OFF OR AREA IS KNOWN TO BE NON-HAZARDOUS.

DO NOT OPEN EQUIPMENT UNLESS SIGNAL CIRCUITS AND POWER HAVE BEEN SWITCHED OFF OR AREA IS KNOWN TO BE NON-HAZARDOUS.

BATTERIES MUST ONLY BE CHANGED IN AN AREA KNOWN TO BE NON-HAZARDOUS.

STATIC HAZARD. DO NOT CLEAN OR RUB ENCLOSURE UNLESS AREA IS KNOWN TO BE NON-HAZARDOUS.

Quantity	Part Number	Description
1	9A-50160002	Circuit Assembly
1	9A-90017003	Cable Assembly, MC Series Totalizers, 2-pin Molded Connector, Direct-Mount, 28-in.
1	9A-100005117	Cable Assembly, Flowmeter, Remote-Mount, 10-ft, with Weatherproof Adapter
1	9A-100005111	Battery - Lithium, 3.6 V
1	9A-50099003	Battery Holder, with 3 Alkaline "D" Batteries
1	9A-100002605	Desiccant Packet
1	9A-50074001	Assembly, Installation Software CD and CD Pocket Folder
1	9A-50165009	Manual, User, MC-III WP
1	9A-50165010	Manual, Quick-Start, MC-III WP
2	9A-50006000	Bracket, Direct-Mount, MC-III WP
2	9A-50006007	Bracket, Remote-Mount, MC-III WP
1	9A-99011007	Strap, Battery (Lithium), Velcro, 5/8 in. x 14.5 in.
2	9A-99011003	Strap, Battery (Alkaline), Velcro, 5/8 in. x 10 in.
1	9A-50166004	Assembly, Switchplate, MC-III WP

Optional Parts List

Quantity	Part Number	Description
1	9A-101283116	Converter, RS-485 to RS-232, 9-Pin, with 10-ft Cable
1	9A-100025195	Converter, RS-485 to RS-232, 25-Pin
1	9A-0112-9015T	Converter, RS-485 to RS-232, Serial Port Powered, DB9 Connector on Both Ends

Recommended Magnetic Pickups

Quantity	Part Number	Description
1	9A-100002337	Pickup, Magnetic, for use with NuFlo liquid turbine meters 3/4" or smaller, -67°F to 225°F (-55°C to 107°C)
1	9A-100002077	Pickup, Magnetic, for use with NuFlo liquid turbine meters 7/8" or larger, -67°F to 250°F (-55°C to 121°C)
1	9A-100002076	Pickup, Magnetic, for use with NuFlo liquid turbine meters 7/8" or larger, -67°F to 450°F (-55°C to 232°C)
1	9A-100003518	Pickup, Magnetic, for use with NuFlo 2" gas turbine meters, 0°F to 225°F (-18°C to 107°C)

Appendix A—Software Program Options

In addition to the standard configuration and flow log menus, the MC-III™ interface software includes a Program Options menu that allows users to customize the way the software functions, handles log data, and communicates.

To access the Program Options menu, select Options in the menu bar; Program Options is the last entry in the dropdown list (Figure A.1).

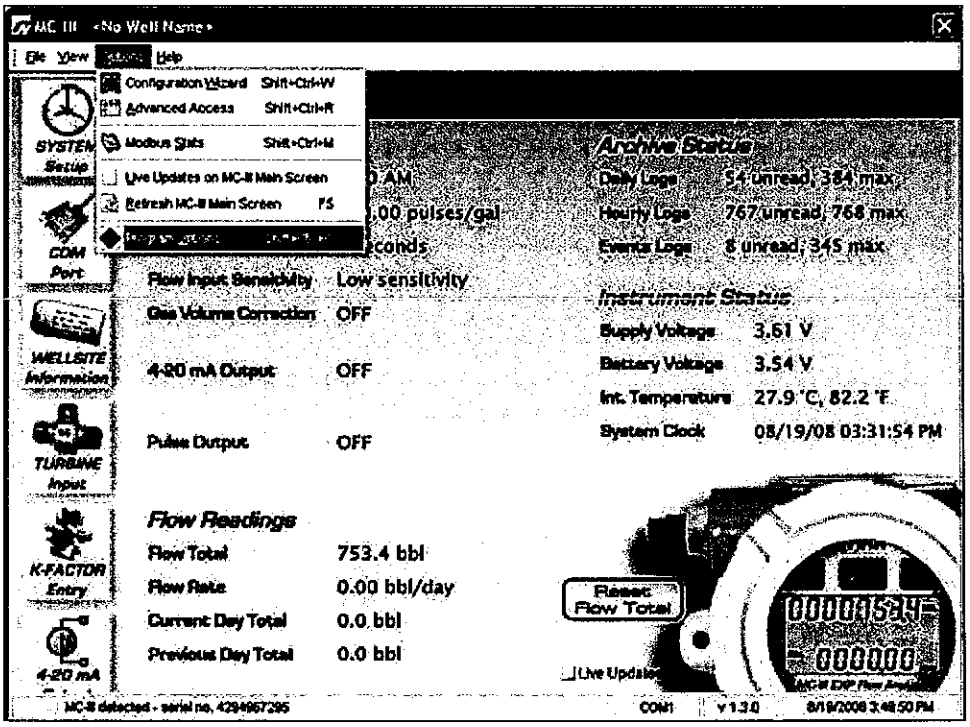

Figure A.1—Program Options menu location

General Options

The General Options screen allows a user to change the threshold setting used to generate a user prompt for synchronizing the internal clock with the time displayed on the user's computer.

The MC-III WP includes a real-time clock for timekeeping and log time stamps, and the internal time and date is preset at the factory. However, if the factory-set time and date are inaccurate for the user (for example, if the user is in a different time zone), the program will automatically detect the difference between the device's internal time and the date and the time/date displayed on the user's personal computer and prompt the user to authorize time and date synchronization.

By default, the MC-III WP prompts a user to synchronize the clock display if the time difference is 60 seconds or more. To change the time difference required to generate a "synchronize" prompt, enter a new threshold value (seconds) in the General Options screen (*Figure A.2*, page A-2) and click "OK."

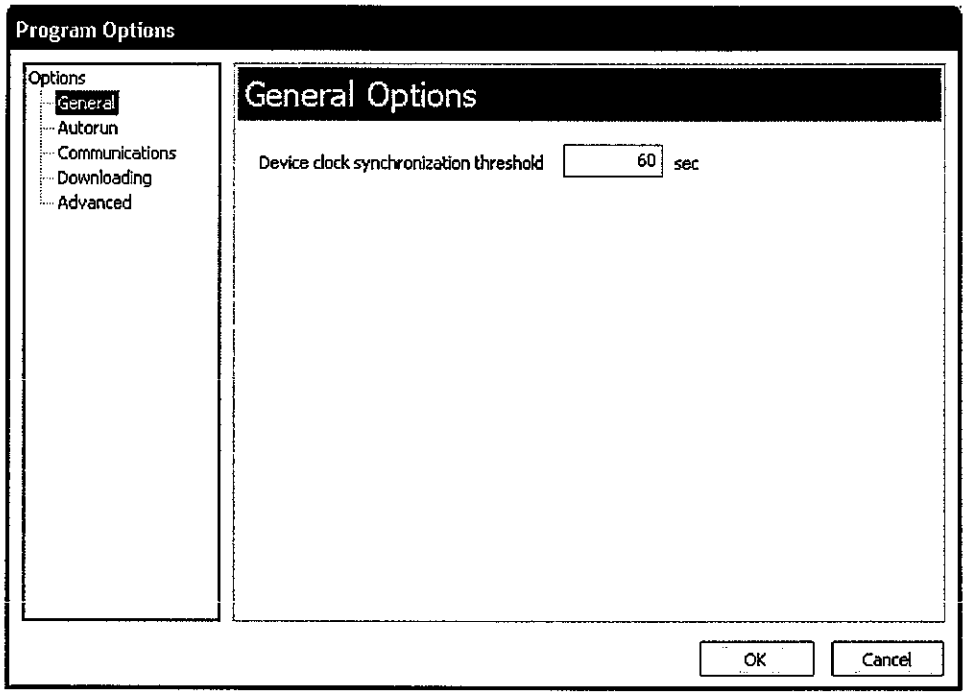

Figure A.2—Threshold setting for internal clock synchronization

Autorun Options

When the software connects with the MC-III WP, the Device Autorun Options screen appears, prompting the user to select any of six actions, including navigating to one of three configuration screens, downloading flow and event logs, and uploading a configuration file. A checkbox at the bottom of the screen allows the user to automate the selected function each time the software connects to the instrument.

The Autorun Options screen in the Program Options menu allows a user to terminate all autorun functions, or change the autorun selection.

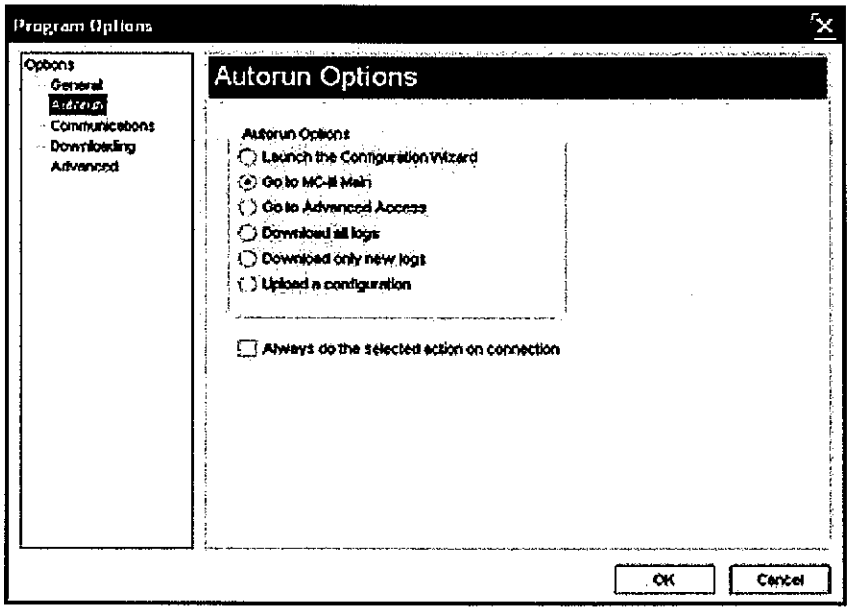

Figure A.3—Menu for changing autorun option selection

To change an autorun setting —that is, to initiate an autorun action, to terminate an autorun action, or to change to a different autorun action at the next connection—select Autorun from the Program Options menu (*Figure A.3*, page A-2), select the appropriate checkboxes, and click "OK." Verify that the "Always do..." checkbox is checked if the selected function is to be automated upon each software connection.

Communications Options

The Communications Options screen (Figure A.4) allows users to customize communication parameters for optimizing performance, depending on the communication path.

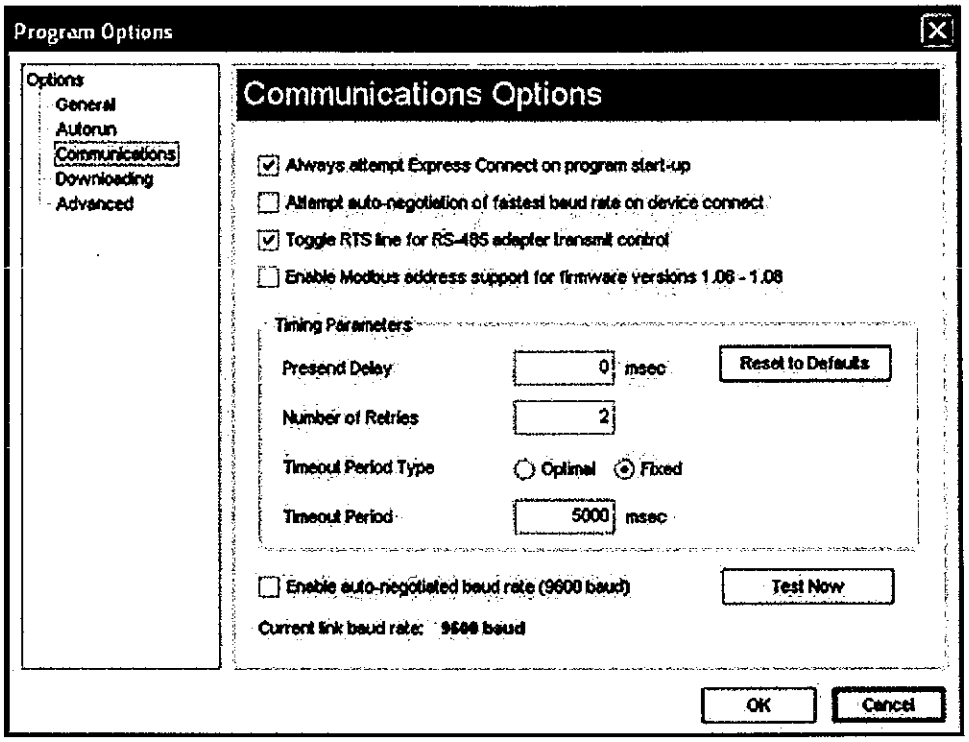

Figure A.4—Menu for changing communication parameters

Express Connect Option

By default, the interface software automatically attempts to connect to the instrument when a user clicks on the desktop application icon. This feature is controlled by the "Always attempt Express Connect on program startup" checkbox setting in the Communications Option screen (Figure A.4).

When multiple devices are daisy-chained together in a network, the "express connect" function can interfere with the user's ability to connect to a specific device. To disable the Express Connect function, deselect the "Always attempt..." checkbox and click "OK." The software will now attempt to connect with the instrument only when the user clicks on the LCD image on the Welcome screen or selects File>Express Connect. For more information, see *Software Connection in Multi-Device Network*, page 43.

To cancel the "express connect" function without disabling the autorun option, the user can toggle between connect/disconnect by clicking in the LCD area of the device on the Welcome screen.

Auto-Negotiate Option

When connected devices are capable of switching baud rates automatically or when devices are directly connected to an MC-III WP, a user may configure the MC-III interface to automatically negotiate the fastest baud rate during device connection. This "negotiated" baud rate does not replace the configured baud rate, but rather provides a temporary boost of baud rate while the computer is connected to the device for faster downloads. After the software disconnects, the device reverts to the configured baud rate.

By default, this function is disabled. To enable automatic baud rate negotiation on device connect, check the "Attempt auto-negotiation…." check box in the Communications Option screen (*Figure A.4*, page A-3) and click "OK". To initiate an immediate search for the fastest baud rate without exiting to the Welcome screen, check the "Enable auto-negotiated baud rate" checkbox, click the "Test Now" button to the right of the checkbox, and click "Yes" at the prompt in the Confirm dialog box.

Enable Auto-Negotiated Baud Rate Option

The "Enable auto-negotiated…" checkbox enables usage of the baud rate that has been automatically selected or "negotiated" by the software, either upon connection with the instrument or when the "Test Now" button was last clicked. See also *Auto-Negotiate Option* above.

Request-to-Send (RTS) Line Option

Some RS-485 to RS-232 converter modules require a request-to-send (RTS) line for switching between a "receive" and "transmit" state. This checkbox allows the software to toggle this line, ensuring that incoming data will be readily transmitted and that the converter will not stall in a "receive" mode after a period of inactivity. By default, this option is enabled. To disable the option, deselect the checkbox and click "OK."

Enable Modbus Address Support for Firmware Versions 1.06 through 1.08

Operators with MC-III units programmed with firmware versions 1.06 through 1.08 must check the checkbox labeled "Enable Modbus Address Support for Firmware Versions 1.06 through 1.08" to ensure seamless Modbus communication with their units. Operators using any other firmware version with the MC-III should leave the checkbox unchecked.

Timing Parameters

Presend Delay

On the Communications Options screen, a user can enter a presend delay (milliseconds) to help ensure a successful connection between the computer and the MC-III when the instrument is networked with a radio or other low-speed device. The computer transmits a request to send, which turns the device on, and then waits the specified length of time before attempting to transmit data. By default, this parameter is set to zero.

Number of Retries

By default, the computer will make two attempts to connect to the MC-III WP before providing an error message. In situations where timeouts are anticipated—for example, due to a slow-speed computer—the user can increase the length of time allowed for a connection by inputting a larger number in the Number of Retries field.

Timeout Period Type

A user can select an "optimal" timeout, which is based on the response time of the MC-III WP to various requests for data at all baud rates during extensive testing, or a fixed timeout determined by the user. By default, the "optimal" period type is enabled. When a communication error occurs, the "optimal" timeout allows the software to respond much faster than the more conservative fixed timeout. The optimal setting is recommended when the software is connecting directly to the instrument. The fixed timeout type is

recommended when data is being transmitted through a radio or other network device (serial to TCP/IP) and there are recognizable delays in the communication system.

Timeout Period

When a fixed timeout period type is selected, the user enters the timeout period value (in milliseconds) in the Timeout Period field. When an "optimal" timeout period type is selected, the user can use this field to enter a percentage by which the "optimal" timeout period is extended. This extension can be advantageous when connecting to a slow computer.

Downloading Options

The MC-III WP automatically saves daily flow logs on the contract hour, and hourly flow logs around the clock. The instrument also automatically saves an event log each time a user change is made. By default, the logs are saved as .csv files.

The Downloading Options screen allows a user to change the format of the auto-save flow logs and event logs to Excel (.xls) files. To save the logs in .xls format, check the "XLS-MS Excel File" checkbox (Figure A.5). Additional checkboxes allow for changes in the appearance of downloaded log data.

Users can also export flow data to a .csv or .xls file as needed. For complete information, see *Exporting Flow Logs*, page 83.

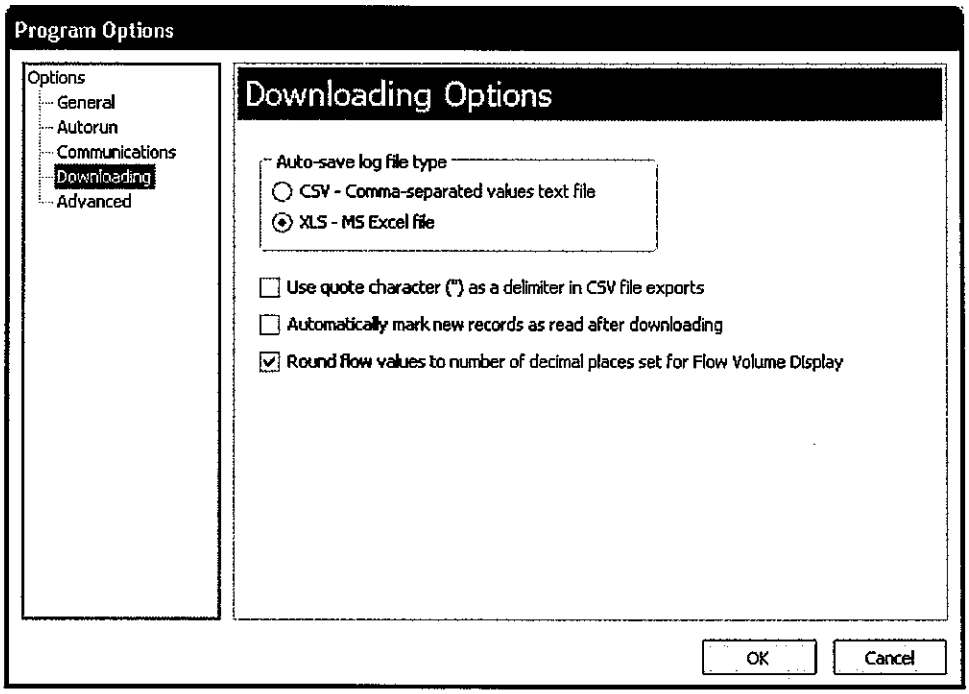

Figure A.5—Menu for changing the auto-save log file format

Advanced Options

Clear EEPROM

The Clear EEPROM function will erase all configuration settings and log data. This task is typically performed when updating to a new firmware version or before moving the instrument to a new site. To clear the memory, click on the "Clear EEPROM" button (Figure A.6).

Technical assistance is typically required for upgrading firmware. Contact Cameron's Measurement Systems Division to arrange for an upgrade.

WARNING **Clicking the "Clear EEPROM" button will delete all configuration settings and log records in the MC-III WP memory.**

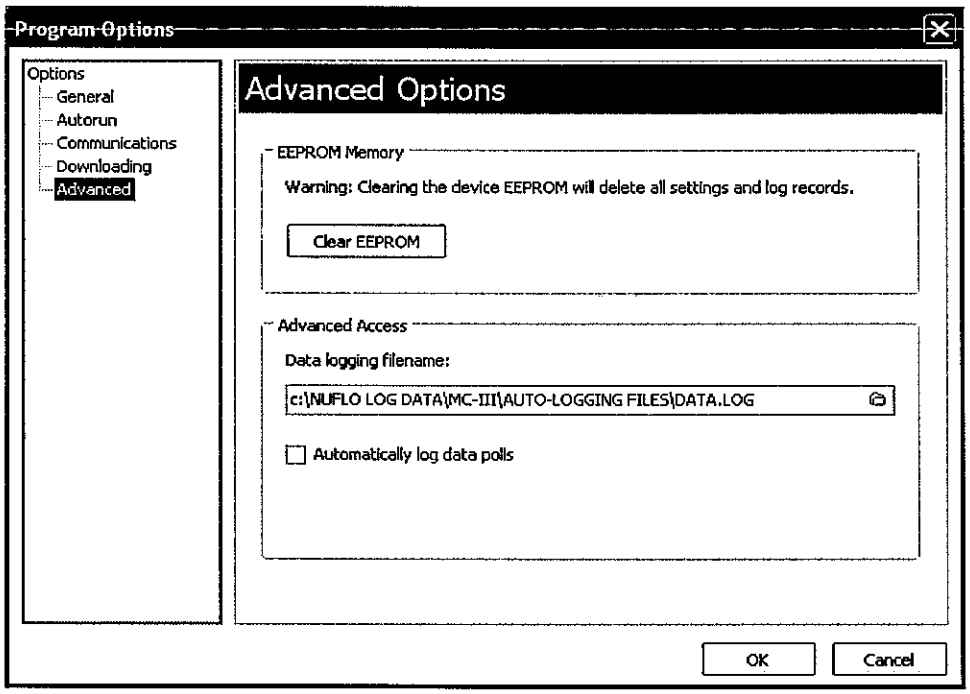

Figure A.6—Menu for clearing EEPROMs and enabling automatic data logs

Automatic Data Logging

Data retrieved from the MC-III WP while in Advanced access mode can be logged to a file by enabling the "Automatically log data polls" checkbox on the Advanced Options screen. To specify the filename and location of the file, click the folder icon on the right of the Data logging filename field. The file will include values that are retrieved from the instrument when the user clicks the "Get All Data" button or enables "Auto Polling" on the Advanced Access screen. See also *Advanced Access*, page 74.

Appendix B—Lithium Battery Information

Lithium Battery Disposal

Once a lithium battery is removed from a device and/or is destined for disposal, it is classified as solid waste under EPA guidelines. Depleted lithium batteries are also considered to be hazardous waste because they meet the definition of Reactivity, as per 40 CFR 261.23(a)(2), (3) and (5). This document describes how the lithium reacts violently with water, forms potentially explosive mixtures with water, and when exposed to certain pH conditions, generates toxic cyanide or sulfide gases.

Federal law requires that depleted lithium batteries be sent to a fully permitted Treatment, Storage and Disposal Facility (TSDF) or to a permitted recycling/reclamation facility.

Important: **Do not ship lithium batteries to Cameron. Cameron facilities are not permitted recycling/ reclamation facilities.**

Caution: **Profiling and waste characterization procedures must be followed prior to shipping a lithium battery to a disposal site. It is the shipper's responsibility to comply with all applicable federal transportation regulations (see below).**

Transportation Information

Warning: **The MC-III WP™ Flow Analyzer contains lithium batteries. The internal component (thionyl chloride) is hazardous under the criteria of the Federal OHSA Hazard Communication Standard 29 CFR 1920.1200. Before shipping a lithium battery or equipment containing a lithium battery, verify that the packaging and labeling conforms with the latest version of all applicable regulations.**

The transport of the lithium batteries is regulated by the United Nations, "Model Regulations on Transport of Dangerous Goods," (special provisions 188, 230, and 310), latest revision.

Within the US the lithium batteries and cells are subject to shipping requirements under Part 49 of the Code of Federal Regulations (49 CFR, Parts 171, 172, 173, and 175) of the US Hazardous Materials Regulations (HMR), latest revision.

Shipping of lithium batteries in aircraft is regulated by the International Civil Aviation Organization (ICAO) and the International Air Transport Association (IATA) requirements in Special Provisions A45, A88 and A99, latest revision.

Shipping of lithium batteries on sea is regulated the International Maritime Dangerous Goods (IMDG) requirements in special provisions 188, 230 and 310, latest revision.

Shipping of lithium batteries on road and rail is regulated by requirements in special provisions 188, 230 and 310, latest revision.

Material Safety Data Sheet

For a link to the current MSDS for the lithium batteries used to power the MC-III WP Flow Analyzer, see the Cameron website: *www.c-a-m.com/flo*.

Appendix C—Communications Protocol

Firmware Version 2.00
Register Table Version 1

Introduction

The communications protocol for the MC-III is in accordance with Modicon, Inc. RTU Mode Modbus® as described in *Modicon Modbus Protocol Reference Guide*, PI-MBUS-300 Rev. J, June 1996. All registers are implemented as 4X or holding registers. Reading of registers is implemented via function code 03H (Read Holding Registers). Writing to registers is implemented via function code 10H (Preset Multiple Registers). The instrument provides Enron Modbus® compliant downloads for hourly, daily and event records. For details on Enron Modbus®, refer to *Specifications and Requirements for an Electronic Flow Measurement Remote Terminal Unit for Enron Corp.*, Dec. 5, 1994.

Supported Commands

The Modbus® functions supported by the MC-III are as follows:

Function Code (Hex)	Description
03	Read Holding Registers
05	Preset Boolean (for Enron event record acknowledgement)
10	Preset Multiple Registers

For the read holding and preset multiple registers, the instrument supports the full 250 bytes of data in a message. This corresponds to 125 registers in 16-bit holding register size and 62 registers in 32-bit holding register size.

Data Types

Various data types are implemented in the MC-III. The following table lists the formats and the numbers of bytes and registers associated with each type.

Data Type	Byte Count	Register Count
Floating Point (FP)	4	2
Floating Point (FP32)	4	1
Unsigned Word (U16)	2	1
Packed ASCII (PA)	2	1

The Floating Point (FP) type follows the IEEE-754 format and consists of 32 bits contained in two registers. It is utilized for parameters and values that are not integers. For example, Instantaneous Flow Rate is a parameter that is a floating-point data type. It can be interpreted by reading two registers, starting with register 17014.

The Floating Point-32 bit (FP32) data type follows the IEEE-754 format and consists of 32 bits contained in a single register.

The word ordering for multiple register data types, such as floating-point numbers or long integers, is for the most significant word to appear first in the message.

The Unsigned Word (U16) type is used for 16-bit integers and fits into one register.

The Packed ASCII (PA) type contains two bytes that are two unsigned characters. Generally, multiple Packed ASCII types are arranged consecutively for implementing strings. For example, the device's well name is a string of 10 unsigned characters that is implemented as 5 Packed ASCII registers. Here is an example of a well name that contains the string, "Test Well 413."

Register	Hexadecimal #	ASCII Characters
210	54 65	Te
211	73 74	St
212	20 57	<SPACE>W
213	65 6C	el
214	6C 20	l<SPACE>
215	34 31	41
216	33 FF	3<UNUSED>

Unused characters at the end of each string will report 0xFF hexadecimal.

Registers

Each register has an Access type: read-only or read-write, as described below.

Access Type	Description
Read Only (RO)	Register can only be read.
Read/Write (R/W)	Register can be read and written.

The registers are grouped into Modbus® map blocks based on function. The MC-III contains the following map functions.

Function	Starting Register
System Configuration	1000
Real Time	1200
Input Configuration	2000
Output Configuration	4000
Holding Register (16-bit)	8000 and 17001
Holding Register (32-bit)	7000
Control Registers	70
Wellsite Parameters	200

Note All registers cited in this document refer to the address of the register that appears in the actual Modbus® message. For example, register 17001 has an address of 0x4268 Hexadecimal in the message.

Note Two sets of 16-bit holding registers are provided (starting at 17001 and 8000). The "8000" set should be used with master devices that require the holding registers to be in the range of 40000 to 49999.

System Configuration

Register (Decimal)	Register (Hex)	Description	Data Type	Access	Default
1000	03E8	Product Code	U16	RO	64
1001	03E9	Register Table Version Number	U16	RO	1
1002	03E	Firmware Version Number (Version = register value divided by 100) (Example: 100 = Version 1.00)	U16	RO	
1003	03EB	Manufacture Date (MMYY)	U16	RO	
1004	03EC	Sales Date (MMYY)	U16	RO	
1005	03ED	Serial Number 1	U16	RO	
1006	03EE	Serial Number 2	U16	RO	
1007	03EF	Power Mode 0 = High Power 1 = Low Power	U16	R/W	1
1008	03F0	Internal System Sample Rate Number of seconds to measure temperature and battery voltage	U16	R/W	3600
1009	03F1	Slave Address [1-65535, not including 252-255 or 64764]	U16	R/W	1
1010	03F2	Baud Rate *Low Power* / *High Power* 0 - 300 / 5 - 9600 1 - 600 / 6 - 19200 2 - 1200 / 7 - 38400 3 - 2400 / 8 - 57600 4 - 4800 / 10 - 115200 5 - 9600	U16	R/W	5
1011	03F3	Bus Delay – mS of delay before transmitting data (Delay = register value multiplied by 10 mS)	U16	R/W	1 (10 ms)
1012	03F4	Bus Timeout – mS of delay before resetting Modbus® (Timeout = register value multiplied by 10 mS)	U16	R/W	5 (50 mS)
1013	03F5	Contract Hour [0-23]	U16	R/W	8
1014	03F6	Lock Code [0001-9999]	U16	R/W	0

System Configuration

Register (Decimal)	Register (Hex)	Description	Data Type	Access	Default
1015	03F7	Lock Code Enable 0 - Disabled 1 - Enabled	U16	R/W	0
1016	03F8	LCD Contrast [0-31]	U16	R/W	6

Product Code (register 1000)

The Product Code is a read-only parameter used for identification. This parameter is set at the factory and it will always read 0x40 hexadecimal (64 decimal).

Firmware/Register Table Version Numbers (registers 1001, 1002)

The Firmware Version and Register Table Version numbers are unsigned 16-bit integers. These parameters are set at the factory and are read-only. To determine the firmware version number, read the appropriate register and divide the value read by 100. The general format for firmware version numbers is A.BC. For example, the firmware register number is read as 0xA7 hexadecimal. This represents 167 and a firmware version of 1.67.

Manufacture Date/Sales Date (registers 1003, 1004)

These parameters are set at the factory and are read-only. These registers are formatted as MMYY. For example, a value of 0905 represents the date September 2005.

Slave Address (register 1009)

The Modbus® slave address is an unsigned word (U16) data type that has a range of values from 1 to 65535, not including 252 through 255 or 64764. The slave address is configured from a laptop or via the keypad and is stored in nonvolatile memory.

Important **All MC-III devices will respond to addresses 252 through 255 and 64764, and the response will always be at a baud rate of 9600 baud. For this reason, addresses 252 through 255 and 64764 are reserved and should never be used.**

When the slave address is written, the response message will be at the current address. After the response message is transmitted, the MC-III will change to the new slave address.

Baud Rate (register 1010)

The baud rate is an unsigned word (U16) data type that sets the data rate on the serial port. When the baud rate is written, the response message will be at the current baud rate. After the response message is transmitted, the MC-III will change to the new baud rate.

Real Time

Register (Decimal)	Register (Hex)	Description	Data Type	Access
1200	04B0	Year (Real Year = register value plus 2000)	U16	R/W
1201	04B1	Month [1-12]	U16	R/W
1202	04B2	Day [1-31]	U16	R/W
1203	04B3	Hour [0-23]	U16	R/W
1204	04B4	Minute [0-59]	U16	R/W
1205	04B5	Second [0-59]	U16	R/W

This block of registers is used to set the instrument's internal clock. To set the time, it is recommended that all registers be written in one message.

The time and date can also be read in the holding register groups as floating-point data.

Input Configuration

Register (Decimal)	Register (Hex)	Description	Data Type	Access	Default
2000	07D0	Volume Units *Units* / *Units × 1000* 0 = No Units / 16 = No Units 1 = Gallons / 17 = Gallons 2 = Barrels / 18 = Barrels 3 = Cubic Meters / 19 = Cubic Meters 4 = Cubic Feet / 20 = Cubic Feet 5 = Liters / 21 = Liters *Standard Units* / *Std. Units × 1000* 32 = No Units / 48 = No Units 33 = Gallons / 49 = Gallons 34 = Barrels / 50 = Barrels 35 = Cubic Meters / 51 = Cubic Meters 36 = Cubic Feet / 52 = Cubic Feet 37 = Liters / 53 = Liters	U16	R/W	2
2001	07D1	Volume Decimal Point Location 1 = Tenths 2 = Hundredths 3 = Thousandths 4 = Ten Thousandths	U16	R/W	1

Input Configuration

Register (Decimal)	Register (Hex)	Description	Data Type	Access	Default
2002	07D2	Rate Volume Units *Units* / *Units × 1000* 0 = No Units / 16 = No Units 1 = Gallons / 17 = Gallons 2 = Barrels / 18 = Barrels 3 = Cubic Meters / 19 = Cubic Meters 4 = Cubic Feet / 20 = Cubic Feet 5 = Liters / 21 = Liters *Standard Units* / *Std. Units × 1000* 32 = No Units / 48 = No Units 33 = Gallons / 49 = Gallons 34 = Barrels / 50 = Barrels 35 = Cubic Meters / 51 = Cubic Meters 36 = Cubic Feet / 52 = Cubic Feet 37 = Liters / 53 = Liters	U16	R/W	2
2003	07D3	Rate Time Base 0 = Second 1 = Minute 2 = Hour 3 = Day	U16	R/W	3
2004	07D4	Rate Decimal Point Location 0 = No digits to the right of the decimal point 1 = Tenths 2 = Hundredths 3 = Thousandths	U16	R/W	2
2005	07D5	Calculation Period (sec)	U16	R/W	4
2006	07D6	Turbine Meter Input Configuration 0 = Pulse Input 1 = TFM - LOW 2 = TFM - MED 3 = TFM - HIGH	U16	R/W	1
2007	07D7	Low Frequency Cut-Off Threshold (Hz)	U16		2
2008	07D8	Factor Type 1 = 1-Point K-Factor 2 = 2-Point K-Factor ... 12 = 12-Point K-Factor	U16	R/W	1

Input Configuration

Register (Decimal)	Register (Hex)	Description	Data Type	Access	Default
2009	07D9	Factor Units 0 = No Units 1 = Gallons 2 = Liters 3 = Barrels 4 = Cubic Feet 5 = Cubic Meters	U16	R/W	1
2010	07DA	Factor Decimal Point Location 0 = No digits to the right of the decimal point 1 = Tenths 2 = Hundredths 3 = Thousandths 4 = Ten Thousandths	U16	R/W	2
2011	07DB	Calibration Frequency [1] (Hz)*	FP	R/W	1.00
2013	07DD	Calibration Frequency [2] (Hz)*	FP	R/W	1.00
2015	07DF	Calibration Frequency [3] (Hz)*	FP	R/W	1.00
2017	07E1	Calibration Frequency [4] (Hz)*	FP	R/W	1.00
2019	07E3	Calibration Frequency [5] (Hz)*	FP	R/W	1.00
2021	07E5	Calibration Frequency [6] (Hz)*	FP	R/W	1.00
2023	07E7	Calibration Frequency [7] (Hz)*	FP	R/W	1.00
2025	07E9	Calibration Frequency [8] (Hz)*	FP	R/W	1.00
2027	07EB	Calibration Frequency [9] (Hz)*	FP	R/W	1.00
2029	07ED	Calibration Frequency [10] (Hz)*	FP	R/W	1.00
2031	07EF	Calibration Frequency [11] (Hz)*	FP	R/W	1.00
2033	07F1	Calibration Frequency [12] (Hz)*	FP	R/W	1.00
2035	07F3	Calibration Factor [1]* (pulses per configured factor unit)	FP	R/W	900.00
2037	07F5	Calibration Factor [2]* (pulses per configured factor unit)	FP	R/W	1.00
2039	07F7	Calibration Factor [3]* (pulses per configured factor unit)	FP	R/W	1.00
2041	07F9	Calibration Factor [4]* (pulses per configured factor unit)	FP	R/W	1.00
2043	07FB	Calibration Factor [5]* (pulses per configured factor unit)	FP	R/W	1.00
2045	07FD	Calibration Factor [6]* (pulses per configured factor unit)	FP	R/W	1.00
2047	07FF	Calibration Factor [7]* (pulses per configured factor unit)	FP	R/W	1.00
2049	0801	Calibration Factor [8]* (pulses per configured factor unit)	FP	R/W	1.00

Input Configuration

Register (Decimal)	Register (Hex)	Description	Data Type	Access	Default
2051	0803	Calibration Factor [9]* (pulses per configured factor unit)	FP	R/W	1.00
2053	0805	Calibration Factor [10]* (pulses per configured factor unit)	FP	R/W	1.00
2055	0807	Calibration Factor [11]* (pulses per configured factor unit)	FP	R/W	1.00
2057	0809	Calibration Factor [12]* (pulses per configured factor unit)	FP	R/W	1.00
2059	080B	Standard Measurement Correction Factor (to be configured by software only)	FP	RO	1.00
2061	080D	Low Flow Rate Cut-Off Threshold (in terms of configured flow rate units)	FP	R/W	1.00

*Calibration frequencies and calibration factors are associated in pairs—i.e., Calibration Frequency [1] and Calibration Factor [1]— and must be sorted in ascending order, based on calibration frequency values, prior to writing the values to the instrument. Therefore, Calibration Frequency [1] should be the smallest of all calibration frequencies.

Output Configuration

Register (Decimal)	Register (Hex)	Description	Data Type	Access	Default
4000	0FA0	Pulse Output Source 0 = Test Mode/Disabled 1 = Enabled	U16	R/W	0
4001	0FA1	Pulse Output Duration (time is register value multiplied by 10 ms)	U16	R/W	10 (100 mS)
4002	0FA2	Pulse Output Decimal Point Location	U16	R/W	2
4003	0FA3	Pulse Output Scale Factor (in terms of configured volume units)	FP	R/W	1.00
4005	0FA5	Analog Output Source 0 = Test Mode/Disabled 1 = Enabled	U16	R/W	0
4006	0FA6	Analog Output Decimal Point Location	U16	R/W	2
4007	0FA7	Analog Output Low Value (in terms of configured flow rate units)	FP	R/W	0.00
4009	0FA9	Analog Output High Value (in terms of configured flow rate units)	FP	R/W	1700.00

Important **Two sets of 16-bit holding registers are provided (starting at 17001 and 8000). The "8000" set displayed in parentheses in the table on page C-9 should be used with master devices that require the holding registers to be in the range of 40000 to 49999.**

Holding Registers (16-bit Mode)

Register (Decimal)	Register (Hex)	Description	Data Type	Access
17001 (8000)	4269 (1F40)	Hourly Pointer [1 to 768]	FP	RO
17003 (8002)	426B (1F42)	Daily Pointer [1 to 384]	FP	RO
17005 (8004)	426D (1F44)	Event Counter [1 to 345]	FP	RO
17007 (8006)	426F (1F46)	Real Date (MM/DD/YY)	FP	RO
17009 (8008)	4271 (1F48)	Real Time (HH:MM:SS)	FP	RO
17011 (8010)	4273 (1F4A)	Grand Total (in terms of configured volume units)	FP	RO
17013 (8012)	4275 (1F4C)	Instantaneous Flow Rate (in terms of configured flow rate units)	FP	RO
17015 (8014)	4277 (1F4E)	Daily Total (in terms of configured volume units)	FP	RO
17017 (8016)	4279 (1F50)	Daily Run Time (seconds)	FP	RO
17019 (8018)	427B (1F52)	Hourly Total (in terms of configured volume units)	FP	RO
17021 (8020)	427D (1F54)	Hourly Run Time (seconds)	FP	RO
17023 (8022)	427F (1F56)	Polling Total (in terms of configured volume units)	FP	RO
17025 (8024)	4281 (1F58)	Polling Run Time (seconds)	FP	RO
17027 (8026)	4283 (1F5A)	Previous Day Total (in terms of configured volume units)	FP	RO
17029 (8028)	4285 (1F5C)	Previous Day Run Time (seconds)	FP	RO
17031 (8030)	4287 (1F5E)	Previous Hour Total (in terms of configured volume units)	FP	RO
17033 (8032)	4289 (1F60)	Previous Hour Run Time (seconds)	FP	RO
17035 (8034)	428B (1F62)	Previous Polling Total (in terms of configured volume units)	FP	RO
17037 (8036)	428D (1F64)	Previous Polling Run Time (seconds)	FP	RO
17039 (8038)	428F (1F66)	Polling Index [0-65535]	FP	RO
17041 (8040)	4291 (1F68)	Internal Temperature (°C)	FP	RO

Holding Registers (16-bit Mode)

Register (Decimal)	Register (Hex)	Description	Data Type	Access
17043 (8042)	4293 (1F6A)	Supply Voltage (VDC)	FP	RO
17045 (8044)	4295 (1F6C)	Battery Voltage (VDC)	FP	RO
17047 (8046)	4297 (1F6E)	Grand Total (base unit)	FP	RO
17049 (8048)	4299 (1F70)	Instantaneous Flow Rate (base unit)	FP	RO
17051 (8050)	429B (1F72)	Daily Total (base unit)	FP	RO
17053 (8052)	429D (1F74)	Daily Run Time (seconds)	FP	RO
17055 (8054)	429F (1F76)	Hourly Total (base unit)	FP	RO
17057 (8056)	42A1 (1F78)	Hourly Run Time (seconds)	FP	RO
17059 (8058)	42A3 (1F7A)	Polling Total (base unit)	FP	RO
17061 (8060)	42A5 (1F7C)	Polling Run Time (seconds)	FP	RO
17063 (8062)	42A7 (1F7E)	Previous Day (base unit)	FP	RO
17065 (8064)	42A9 (1F80)	Previous Day Run Time (seconds)	FP	RO
17067 (8066)	42AB (1F82)	Previous Hour (base unit)	FP	RO
17069 (8068)	42AD (1F84)	Previous Hour Run Time (seconds)	FP	RO
17071 (8070)	42AF (1F86)	Previous Polling Total (base unit)	FP	RO
17073 (8072)	42B1 (1F88)	Previous Polling Run Time (seconds)	FP	RO
17075 (8074)	42B3 (1F8A)	Polling Index [0-65535]	FP	RO
17077 (8076)	42B5 (1F8C)	Pulse Output Pulses	FP	R/W
17079 (8078)	42B7 (1F8E)	Analog Output Current	FP	R/W
17081 (8080)	42B9 (1F90)	Calculated K-Factor (in terms of configured factor unit)	FP	RO

Base Units/Configured Units

The holding register area provides two blocks of registers. The first block is based on the *configured* units of measurement. The configured volume units will follow the settings in the Volume Unit register (2000). The configured rate units will follow the settings in the Rate Volume units (2002) and the Time-Base register (2003).

For example, if the settings for the volume unit is 2 (BBL), all of the total parameters such as Grand Total (17011), Daily Total (17015), etc. will be in terms of barrels. The values in these registers will change if the user changes the units of measurement that appear on the LCD.

The second block is in terms of *base* units. These register values are independent of the configured volume units in the Volume Unit, Rate Volume Unit, and Time-Base registers. For base units, the time base is always measured in seconds, and the volume and rate volume units are measured in gallons. If the standard correction factor has been enabled, the volume unit is standard gallons. The standard gallon is calculated as the gallon measurement times the Standard Measurement Correction factor (2059). If the x1000 unit is enabled, the volume unit is gallons times 1000.

Conversion Factors

For base units, the volume unit and rate volume unit is measured in gallons.To convert gallons to another unit of measure, use the conversion factors listed in the table below. For example, to convert gallons to barrels, multiply gallons times 0.02380952381.

To Convert From Gallons To...	Multiply By...
No units	1.00000000000
Barrels	0.02380952381
Cubic meters	0.00378541178
Cubic feet	0.13368055556
Liters	3.78541178400

Polling Registers

The MC-III device stores the volume accumulated since the last polling sequence in a set of polling registers (17023). In addition, the instrument monitors the number of seconds of flow time in each polling interval (17025). There is also an index to the number of polls requested (17039).

The polling sequence is started by writing to the Control Register. Writing the Control Register 1 (70) with a value of 20000 decimal transfers the polling total (17023) and polling run time (17025), to the previous polling total (17035) and previous polling run time (17037) registers, increments the polling index (17039) register and resets the polling total and polling run time registers.

Pointer/Daily/Event Pointer (registers 17001 through 17006)

These registers provide an index of the last record that was stored in the log data. These values start at 1 and increment with each newly created log. When the maximum number of records is reached, the pointer resets at 1 and starts incrementing again.

Real Date (registers 17007, 17008)

This register is a floating-point representation of the date, formatted as MMDDYY. For example, a value of 91005 represents a date of September 10, 2005.

Real Time (registers 17009, 17010)

This register is a floating-point representation of time, formatted as HH:MM:SS. For example, a value of 180205 represents a time of 6:02:05 PM.

Totals

The instrument provides Grand Total (17011), Daily Total (17015), Hourly Total (17019) and a Polling Total (17023). It also provides Previous Day Total (17027), Previous Hour Total (17031), and Previous Polling Total (17035). These totals are available in terms of configured units and base units. Refer to *Base Units/ Configured Units*, page C-11, for details.

Pulse Output Pulses (register 17077)

When the pulse output is enabled (see Pulse Output Source, register 4000), this register indicates the current number of output pulses to be sent to the output relay, based on the configured duration. In a typical application, this register will generally indicate a small number, then quickly count down to zero. In a situation where pulses are being cached, the pulses register will indicate a large value. When the pulse output is disabled, a user can use this register to write a desired number of pulses to be output, for use in testing end devices. Users can also perform this output test from the software Pulse Output configuration screen. For details, see *Pulse Output Testing*, page 70.

Analog Output Current (register 17079)

When the analog output is enabled (see Analog Output Source, register 4005), this register indicates the calculated output current based on the low and high values and the instantaneous flow rate. When the analog output is disabled, a user can use this register to write a desired output current for use in testing end devices. Users can also perform this output test from the software 4-20 mA Output configuration screen. For details, see *4-20 mA Output Testing*, page 67.

Calculated K-Factor (register 17081)

This register represents the K-factor that was used for the most recent calculation interval. This number is calculated based on the factor type (register 2008), the instantaneous frequency from the flowmeter, calibration frequencies (registers 2011 through 2033), and calibration factors (registers 2035 through 2057). The unit of measurement for this register is pulses per configured factor unit. Once the K-factor is calculated based on frequency and K-factor points, this value is multiplied by 1000 if the user chooses to read the volume in units x 1000, and it is divided by the Standard Measurement Correction Factor (register 2059).

Holding Registers (32-bit Mode)

Register (Decimal)	Register (Hex)	Description	Data Type	Access
7000	1B58	Hourly Pointer [1 to 768]	FP32	RO
7001	1B59	Daily Pointer [1 to 384]	FP32	RO
7002	1B5A	Event Counter [1 to 345]	FP32	RO
7003	1B5B	Real Date (MM/DD/YY)	FP32	RO
7004	1B5C	Real Time (HH:MM:SS)	FP32	RO

Holding Registers (32-bit Mode)

Register (Decimal)	Register (Hex)	Description	Data Type	Access
7005	1B5D	Grand Total (in terms of configured volume units)	FP32	RO
7006	1B5E	Instantaneous Flow Rate (in terms of configured flow rate units)	FP32	RO
7007	1B5F	Daily Total (in terms of configured volume units)	FP32	RO
7008	1B60	Daily Run Time (seconds)	FP32	RO
7009	1B61	Hourly Total (in terms of configured volume units)	FP32	RO
7010	1B62	Hourly Run Time (seconds)	FP32	RO
7011	1B63	Polling Total (in terms of configured volume units)	FP32	RO
7012	1B64	Polling Run Time (seconds)	FP32	RO
7013	1B65	Previous Day Total (in terms of configured volume units)	FP32	RO
7014	1B66	Previous Day Run Time (seconds)	FP32	RO
7015	1B67	Previous Hour Total (in terms of configured volume units)	FP32	RO
7016	1B68	Previous Hour Run Time (seconds)	FP32	RO
7017	1B69	Previous Polling Total (in terms of configured volume units)	FP32	RO
7018	1B6A	Previous Polling Run Time (seconds)	FP32	RO
7019	1B6B	Polling Index [0-65535]	FP32	RO
7020	1B6C	Internal Temp (°C)	FP32	RO
7021	1B6D	Supply Voltage (VDC)	FP32	RO
7022	1B6E	Battery Voltage (VDC)	FP32	RO
7023	1B6F	Grand Total (base unit)	FP32	RO
7024	1B70	Instantaneous Flow Rate (base unit)	FP32	RO
7025	1B71	Daily Total (base unit)	FP32	RO

Holding Registers (32-bit Mode)

Register (Decimal)	Register (Hex)	Description	Data Type	Access
7026	1B72	Daily Run Time (seconds)	FP32	RO
7027	1B73	Hourly Total (base unit)	FP32	RO
7028	1B74	Hourly Run Time (seconds)	FP32	RO
7029	1B75	Polling Total (base unit)	FP32	RO
7030	1B76	Polling Run Time (seconds)	FP32	RO
7031	1B77	Previous Day (base unit)	FP32	RO
7032	1B78	Previous Day Run Time (seconds)	FP32	RO
7033	1B79	Previous Hour (base unit)	FP32	RO
7034	1B7A	Previous Hour Run Time (seconds)	FP32	RO
7035	1B7B	Previous Polling Total (base unit)	FP32	RO
7036	1B7C	Previous Polling Run Time (seconds)	FP32	RO
7037	1B7D	Polling Index [0-65535]	FP32	RO
7038	1B7E	Pulse Output Pulses	FP32	R/W
7039	1B7F	Analog Output Current	FP32	R/W
7040	1B80	Calculated K-Factor (in terms of configured factor unit)	FP32	RO

Control Register

Register (Decimal)	Register (Hex)	Description	Data Type	Access
70	0046	Control Register #1	U16	R/W

The Control register allows specific functions to be implemented via the communication port. The following table shows the value to be written to the control register to implement the desired function.

Code	Function
20000	Transfers the polling total and polling run time to the previous polling total and previous polling run time registers, increments the polling index register, and resets the polling total and polling run time registers.
30000	Resets grand total
40000	Loads factory defaults
40040	Creates processor reset

Wellsite Parameters

Register (Decimal)	Register (Hex)	Description	Data Type	Access
200	00C8	Company Name [20 characters]	PA	RO
210	00D2	Well Name [20 characters]	PA	RO
220	00DC	Site Location [20 characters]	PA	RO
300	012C	Site ID [20 characters]	PA	RO
310	0136	Tag Name [10 characters]	PA	RO
315	013B	Legal Description [34 characters]	PA	RO
400	0190	Sensor Model Number [20 characters]	PA	RO
410	019A	Sensor Serial Number [20 characters]	PA	RO
420	01A4	Measurement Type [20 characters]	PA	RO
500	01F4	User Note [64 characters]	PA	RO

These registers provide access to the ASCII characters that are used in the Wellsite Information screen of the software. These registers are read-only; if these parameters need to be changed, the user must use the interface software program.

Log Data

The MC-III provides Enron Modbus® compliant downloads. For detailed instructions on downloading hourly, daily and event data, refer to *Specifications and Requirements for an Electronic Flow Measurement Remote Terminal Unit for Enron Corp*. If an Enron host is not available or is too cumbersome to implement, the Enron records are individually addressed in another Modbus® map. Contact Cameron technical support for details.

The following registers are used for hourly, daily and event log registers. Hourly and daily records comprise five values (registers). See the *Hourly/Daily Record Format table*. Note that event records are downloaded one at a time.

Enron Registers

Register (Decimal)	Register (Hex)	Description	Data Type	Access
32	0020	Enron Modbus® Event Log Register	Refer to Enron Event Record Format	RO
700	02BC	Enron Modbus® Hourly Log	Refer to Enron Hourly/Daily Record Format	RO
701	02BD	Enron Modbus® Daily Log	Refer to Enron Hourly/Daily Record Format	RO
7000	1B58	Hourly Pointer [1 to 768]	FP32	RO
7001	1B59	Daily Pointer [1 to 384]	FP32	RO
7002	1B5A	Event Counter [1 to 345]	FP32	RO

Enron Hourly/Daily Record Format

Parameter	Data Type
Date (MMDDYY)	FP32
Time (HH:MM:SS)	FP32
Total (base units)	FP32
Flow Time (number of seconds of flow)	FP32
Supply Voltage (VDC)	FP32

Enron Event Record Format

Parameter	Data Type
Status	U16
Address	U16
Time (HH:MM:SS)	FP32
Date (MMDDYY)	FP32
As-Found	FP32
As-Left	FP32

The Event Log status is a 16-bit value used to indicate the reset source in the event log. The following table indicates the reset status.

Reset Status

Status Code	Value
Normal	0
Power-On Reset	3
Watch-Dog	8
Software Reset	16
Flash Memory Error	32

Log Capacity

Log Type	Capacity
Hourly Logs	768
Daily Logs	384
Event Logs	345

WARRANTY - LIMITATION OF LIABILITY: Seller warrants only title to the products, software, supplies and materials and that, except as to software, the same are free from defects in workmanship and materials for a period of one (1) year from the date of delivery. Seller does not warranty that software is free from error or that software will run in an uninterrupted fashion. Seller provides all software "as is". THERE ARE NO WARRANTIES, WPRESS OR IMPLIED, OF MERCHANTABILITY, FITNESS OR OTHERWISE WHICH EXTEND BEYOND THOSE STATED IN THE IMMEDIATELY PRECEDING SENTENCE. Seller's liability and Buyer's exclusive remedy in any case of action (whether in contract, tort, breach of warranty or otherwise) arising out of the sale or use of any products, software, supplies, or materials is expressly limited to the replacement of such products, software, supplies, or materials on their return to Seller or, at Seller's option, to the allowance to the customer of credit for the cost of such items. In no event shall Seller be liable for special, incidental, indirect, punitive or consequential damages. Seller does not warrant in any way products, software, supplies and materials not manufactured by Seller, and such will be sold only with the warranties that are given by the manufacturer thereof. Seller will pass only through to its purchaser of such items the warranty granted to it by the manufacturer.

MEASUREMENT SYSTEMS

HOUSTON HEAD OFFICE | 281.582.9500

NORTH AMERICA | 1.800.654.3760 | ms-us@c-a-m.com

ASIA PACIFIC | +603.2287.1039 | ms-asiapacific@c-a-m.com

EUROPE, MIDDLE EAST & AFRICA | +44.1243.826741 | ms-uk@c-a-m.com

USA • CANADA • UK • SCOTLAND • CHINA • UAE • ALGERIA • MALAYSIA • INDIA • KENYA • www.c-a-m.com/flo

CAMERON

Proactive Environmental Products Abyss Controller

1767 Lakewood Ranch Blvd. Suite #113
Bradenton, Florida 34211
Ph: 1.941.322.8504 Fax: 1.941.322.8519
Email us: PROACTIVE@GOPRONOW.BIZ
WWW.GOPRONOW.BIZ

ABYSS CONTROLER (WITH DRY SHUT OFF SENSOR PROBES)

Installation of Controller:

1. If installing on a post, you may use the included bracket and screws
2. Connect the PV Cell panel cable, make sure the solar panels are covered against sunshine; correct connection will be indicated by the GREEN LED.
3. Attach the HI/LOW/GROUND sensors at the desired depth to the safety wire and the discharge tube.
4. Connect the Abyss pump cable. Tighten carefully!!
5. Test the function by switching the manual switch (inside the controller, upper right corner) to the "ON" position for a few seconds.
6. Connect all 3 sensor wires to the correct cable connector in the controller. HIGH sensor to HIGH Cable connector etc.

To help make the controller less acceptable to heavy rain or water, please use window sealant around the cable connector openings on the bottom of the Abyss controller. After it seals you can always peel off the window sealant with no problem if you need to get into that area of the controller.

Installation of the Abyss pump!

A. HIGH water level sensor turns the pump on. (mount the brass probe below the static water level at the desired turn on point.)
B. LOW water level sensor turns the pump off.(mount the brass probe 1 foot above the ground sensor.
C. GROUND or common water level sensor probe must be under water at all times. Mount the brass probe 1 foot above the pump.

The distance between the HIGH & GROUND water level sensor should not exceed 2 feet. This depends on water conductivity.

EXAMPLE OF ABYSS PUMP WITH ABYSS CONTROLER (WITH DRY SHUT OFF SENSOR PROBES) HOOKED UP DIRECT WITH 12.5 VOLT BATTERY

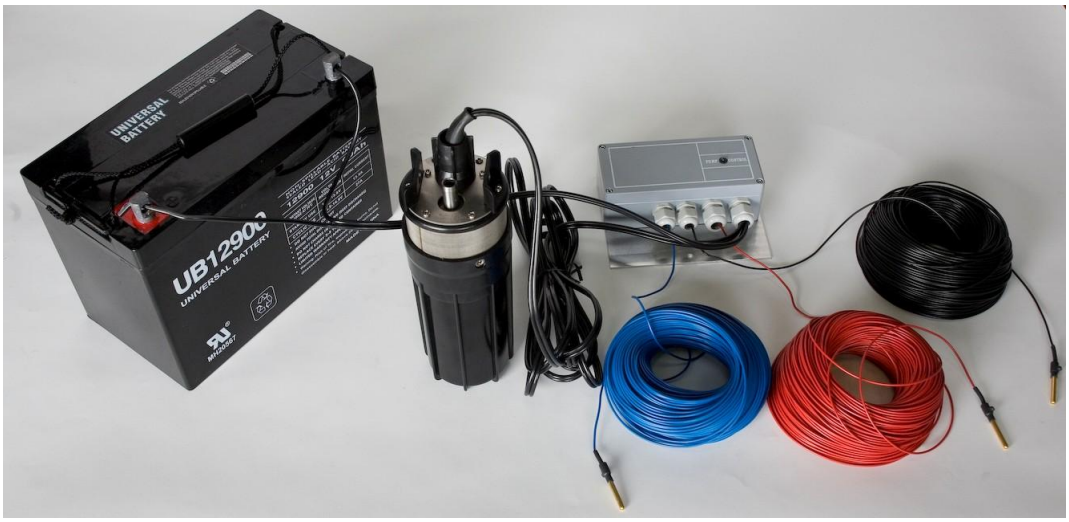

NOTE: COLOR WIRES ARE NOT SPECIFIED, YOU DECIDE WHICH COLORED WIRE CAN BE DESIGNATED FOR HIGH, LOW OR GROUND WATER SENSOR
3 rolls of 300 feet of spooled wire.

Installation of the optional Remote Float Switch:
A remote float switch (remote ON/OFF circuit) is used to turn the Abyss on and off from a remote location, say a 55 gallon drum or a large storage tank. Simply purchase a float switch. This float switch will in essence if used correctly will "short" the two terminals to turn the pump off. The resistant on the wire should NOT exceed 250 ohms

Function of the LED light on the Controller:
Green Light: The green LED is inside the controller. If the wiring from the panel is correct, then the green LED light will be on
Red Light: The red LED is on the front side of the controller. If the red light is on then:

a) The float switch is on a high position and the reservoir is full.
b) If the water table inside the well is lowered to the level of the LOW sensor and the dry running protection of the pump is in function.

SWITCH NUMBER	SET UP	1 DIP SWITCH	2 DIP SWITCH	3 DIP SWITCH	4 DIP SWITCH
25 VOLT SOLAR DIRECT	Two modules in series ”direct”	ON	OFF	OFF	OFF
25 VOLT BATTERY BASED	Two batteries in series	OFF	ON	OFF	OFF
12.5 VOLT SOLAR DIRECT	One module “direct”	OFF	OFF	ON	OFF
12.5 VOLT BATTERY BASED	One Battery	OFF	OFF	OFF	ON

Installation on how to hook up the Abyss controller and pump to a photovoltaic cell(PV CELL)

A. PV CELL-(IN) NEGATIVE WIRE FROM THE PV CELL
B. PV CELL+(IN) POSITIVE WIRE FROM THE PV CELL
C. PUMP-(OUT) NEGATIVE WIRE FROM THE PUMP
D. PUMP+(OUT) POSITIVE WIRE FROM THE PUMP
E. ON/OFF SWITCH manual switch TURNS THE PUMP ON AND OFF
F. 12V/24V SWITCH SELECT SYSTEM VOLTAGE
G. MOUNT AND GROUND CONTROLLER PROPERLY

(PRESET ADJUSTMENT: 12 VOLTS)

IF THE CONTROLLER IS USED IN CONJUNCTION WITH BATTERIES AND CHARGE REGULATORS, THEN THERE MUST BE A 10AMP FUSE ON THE CABLE TO THE BATTERY.

IMPORTANT WATCH FOR CORRECT ELECTRIC CONNECTION (POSITIVE (+) AND NEGATIVE (–) CABLE CONNECTION)

DO NOT EXPOSE CONTROLLER INTO DIRECT SUNLIGHT OR HEAVY RAIN!!

Attachment P-6

Routine Inspection and Maintenance for Ponds and Tanks

In order to manage the size of this 100% design report, this attachment only is included in the electronic submittal. This attachment describes current Site O&M activities, and has not been revised for this submittal.

Note: The inspection and maintenance activities listed in this attachment will be used until the existing ponds and tanks are removed during the implementation of the remedial action.

ATTACHMENT 6
EXISTING PONDS AND TANKS

Attachment 6

These inspection forms are to be used for the required inspections of existing ponds and tanks. These inspections are required to be performed quarterly or after major storm events. The completed copies are to be bound together and filed at the Dawn Mill Site office.

POND AND TANK INSPECTION FORM*
MIDNITE MINE

Inspector's Name:_____ Date:_____ Time:_____

Pond or Tank Number (see Location Index Map):_____

Location Description:_____

_____

Weather Conditions:_____

Date of Last Precipitation: _____

Score the following on a 1 to 5 scale
1 = poor condition (significant problems) 5 = excellent condition (no problem)

Accumulation of Debris/Sediment	1	2	3	4	5
Conditions of Pipes	1	2	3	4	5
Embankment Condition	1	2	3	4	5
Side Slope Erosion	1	2	3	4	5
Spillway Condition	1	2	3	4	5
Tank Condition	1	2	3	4	5
Manhole Condition	1	2	3	4	5
Other _____	1	2	3	4	5

Inspection Summary (explain if maintenance is needed and to what extent, attached sketches if necessary)

_____

_____

_____

_____

_____

Photo Log (photos with legend attached)

Photo Number and Subject: _____

Photo Location: _____

Direction Photo Taken (looking upstream/downstream, north or south, etc) _____

_____

*Quarterly inspection and following major storm events is required

E:\181850-2010-Survey\Task 400\OMMP\POND & TANK MAP.dwg SAVED:12/22/10 PRINTED:12/29/10 BY:TONY.DAVIS

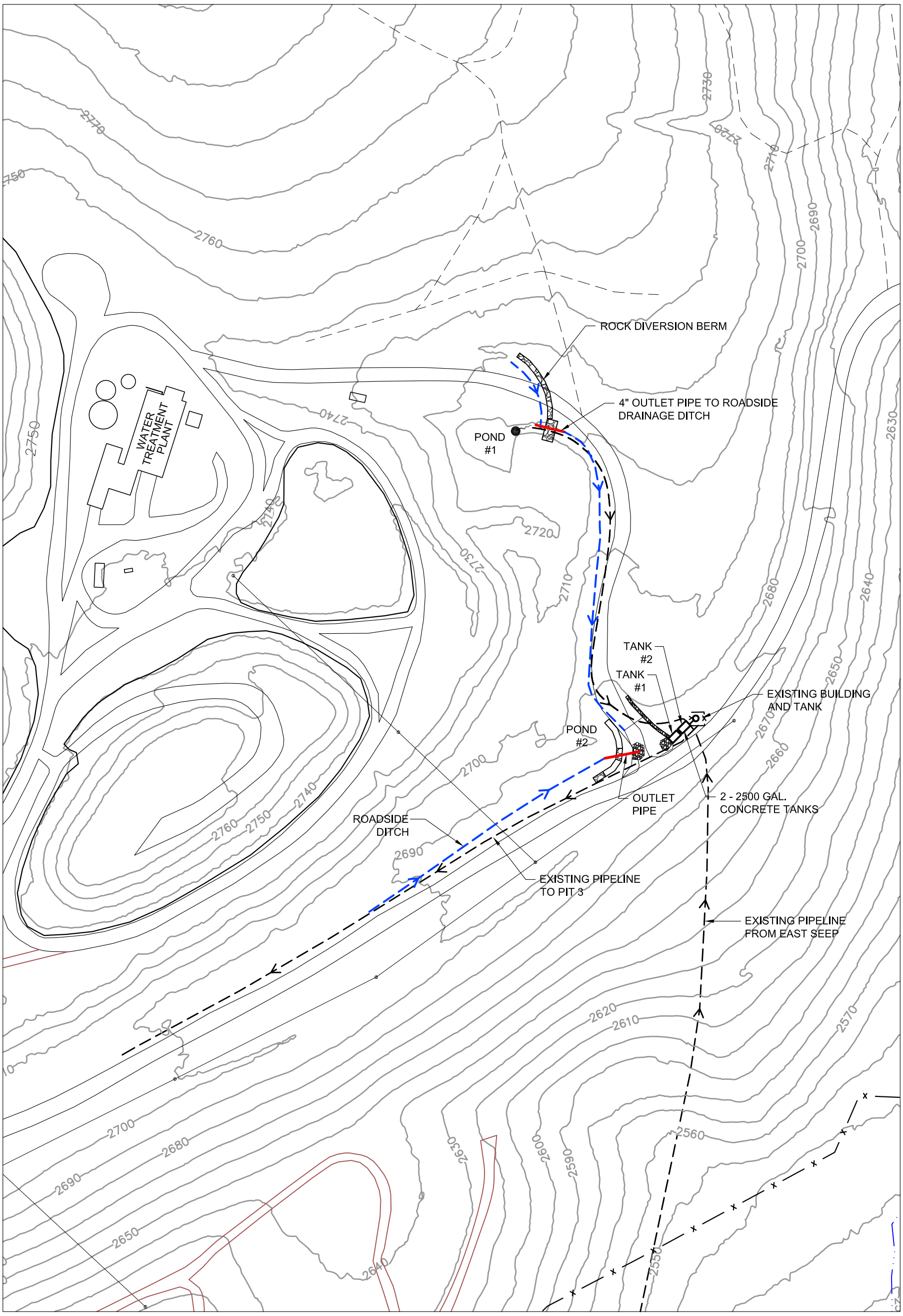

NORTH

SCALE IN FEET

0 100'

MIDNITE MINE

POND AND TANK
LOCATION INDEX MAP

PROJECT:	181850
DATE:	DECEMBER 2010
FILE:POND & TANK MAP.DWG	

TETRA TECH

Attachment P-7

Routine Inspection and Maintenance for the Filter Press

In order to manage the size of this 100% design report, this attachment only is included in the electronic submittal. This attachment describes current Site O&M activities, and has not been revised for this submittal.

Note: This OM&M Plan addresses inspection, monitoring, and maintenance activities associated with the filter press. This attachment will be incorporated in its entirety into the OM&M Plan for new water treatment plant.

Attachment 7

The general filter press operations and maintenance manuals are contained in this attachment. These manuals will be supplemented with additional information after installation and testing of the filter press.

The information in this attachment is in general supplemental to Attachment 1: Operation, Maintenance and Monitoring (OM&M) Plan for the Midnite Mine Water Collection System and Water Treatment Plant for the Phase I RD/RA: Interim Water Management for the Midnite Mine and specifically applied to the sections as defined below.

The following information is supplemental to Attachment 1, Section 2.6:

2.6.1 Sludge Dewatering

Sludge from the clarifier #1 is fed to a steady head tank and pumped to the either the filter press or centrifuge(s) for dewatering and final removal from the system.

The liquid discharge (centrate) is pumped back to the neutralization surge tank, and the sludge discharge disposed as described in Section 2.7,Sludge Transport and Final Disposal.

Sludge dewatering follows primary solid liquid separation in the clarifiers. After the sludge is filtered and discharged from the filter press or centrifuge(s) as a solid cake, it will be containerized and transported to the disposal area.

2.6.1.1 Control

- Filter Press
  - Sludge is delivered to the filter press using an air operated diaphragm pump. The speed of the air operated diaphragm pump is regulated by an air control valve. The filter press and air operated diaphragm pump are manually started and stopped by the operator.

- Centrifuge
  - Sludge is delivered to the centrifuges using Moyno progressive cavity pumps. The speed of the progressive cavity pumps are regulated by the speed of the centrifuge back drive. The centrifuges and progressive cavity pumps are manually started and stopped by the operator.

2.6.1.2 Major Components

The major components of the sludge dewatering system include:

- Filter Press
  - One Filter Press – Pacific Press Company, Model #P12M232A-50CR
  - Filter Press Feed Pump – Air operated diaphragm – TBD
  - Sludge Steady Head Tank – TBD
  - Centrate Surge Tank.

- Centrifuge
  - Two Centrifuges
  - Centrifuge Feed Pumps (2)
  - Discharge Conveyor (1)
  - Centrate Surge Tank – Steel Tank (1)

See Appendix C for more detailed information on pumps, equipment, piping, instrumentation, and power.

2.6.1.3 Laboratory or Onsite Testing Controls

Paint Filter Liquids Test

Purpose	This test is used to determine the free water content in the plant sludge.
Sampling Site	Centrifuge sludge discharge conveyor #2 or cake from filter press plate
Expected Range of Results	Results are not quantified with this test. The sludge material is placed on a paint filter and if any liquid passes through and drops from the filter within the 5 minute test period, the material is deemed to contain free liquids.
Method Reference	40 CFR 264.314
Consequences of Test Results	If the test confirms the presence of free liquids, the sludge will be further processed to remove residual water.

2.6.1.4 Start-Up

Filter Press - For more details of the filter press startup and operation, please refer to the Pacific Press Company operating manual. The filter press operating manual is stored in the WTP control room. The following sequence shall be followed when starting the filter press sludge dewatering system:

1. Inspect filter press building for obstructions around and below filter press. Verify that sludge haul truck bed is down. Put truck power take off into neutral.
2. Make sure that the sludge steady head tank scraper is running.
3. Back sludge haul truck under filter press.
4. Check that filter press plates and seals are clean.
5. Close filter press – Method TBD.
6. Shut bombay doors – Method TBD
7. Start air operated diaphragm pump – Method TBD
8. After centrate surge tank has filled, start centrate pump.
9. Shut off pump – Pressure and method TBD.
10. Core blow down – Time and method TBD.
11. Open filter press just enough to release pressure – TBD

12. Allow any water to drip onto the bombay doors. When water finishes dripping, open bombay doors.

13. Use the plate shifter to move each plate and use the scraper to clean the filter cake off each plate.

14. After emptying the filter press, clean cloth and seals as required. If washing down the cloth and seals, pull out sludge truck to prevent water from getting into the sludge haul truck trailer.

Centrifuge - For more details of the centrifuge startup and operation, please refer to the Sharples operating manual. The Sharples operating manual is stored in the WTP control room. The following sequence shall be followed when starting the sludge dewatering system:

1. Inspect truck shed for obstructions around conveyor. Verify that sludge haul truck bed is down. Put truck power take off into neutral.

2. Back sludge haul truck under conveyor.

3. Check oil level in pumps.

4. Push start button for centrifuge.

5. Push start button for backdrive.

6. Push start button for conveyor.

7. After centrate surge tank has filled, start centrate pump.

2.6.1.5 Normal Operation

Filter Press – TBD

Centrifuge – During normal operations, once the system is stable, the plant will run 24 hours per day and centrifuges will operate continuously for 15 hours daily. After shutdown of the centrifuges, rinse the centrifuges with water. After the sludge truck has been loaded, pull the truck out and hose down the truck bay. The daily sludge output is approximately 12 tons per day and is transported and disposed as described in the Residual Management Plan (Miller Geotechnical Consultants, 2009).

2.6.1.6 Alternate Operation

The alternative operation for the filter press is to run the centrifuge.

2.6.1.7 Emergency Operations and Failsafe Features

Filter Press – Emergency stop cables and a light curtain are present on the filter press. Activation of either of these will stop the filter press.

Centrifuge - There are no emergency operations associated with this sludge dewatering system. Emergency stop cables run along the sludge conveyor. The centrifuges are equipped with vibration sensors that will shut off the centrifuges if excessive vibration is occurring.

The following information is supplemental to Attachment 1, Section 3.11:

3.11 Common Operating Problems for the Sludge Dewatering System

1. **Description of Problem:** Filter press or centrifuge does not start or operate.

   Probable Causes and Control Techniques:

   A. Filter Press – Failure of the filter press controls. Remedy: verify that the breaker switch and power switch are both ON. Electricians should verify proper power input.

   B. Centrifuge - Failure of the drive motor. Remedy: verify that the breaker switch and power switch are both ON. Electricians should verify proper power input and motor operation. Replace motor if necessary.

2. **Description of Problem:** No solids or low solids produced.

   Probable Causes and Control Techniques:

   A. Sludge steady head tank is empty. Remedy: open feed from clarifier #1 to sludge steady head tank or clean piping.

   B. Piping from sludge steady head tank to pump is plugged. Remedy: Check for flow from sludge stead head tank to pump intake using pressurized water. If there is no flow, clean piping.

   C. Scraper for filter press sludge steady head tank is not functioning. Remedy: Verify that the breaker switch and power switch are both ON. Electricians should verify proper power input and motor operation. Replace motor if necessary.

   D. Flocculant feed to filter press or centrifuge is shut off, at the incorrect flow, or at the incorrect concentration. Remedy: check that flocculant is pumping to centrifuge, if flocculant is pumping refer to Section 3.1.9 for trouble shooting of the flocculant feed rate and concentration.

   E. Filter press or centrifuge feed pump motor has failed. Remedy:

      i. Filter Press - Verify that air compressor is on and supplying air to the pump. Verify that pump is operating. Check for leaks in the air pipeline or receiver tank. Check that air compressor is supplying the proper air pressure and volume. Check that air valve for pump is opening. Repair air compressor of pump if necessary.

      ii. Centrifuge - Verify that the breaker switch and power switch are both ON. Electricians should verify proper power input and motor operation. Replace motor if necessary.

   F. Centrifuge feed pump stator or rotor has worn out. Remedy: check that pump is running and sludge flow is available to pump. If discharge from pump is low, replace stator and/or rotor.

3. **Description of Problem:** General troubleshooting

   Probable Causes and Control Techniques:

   A. See manufacturer's operation and maintenance manual for additional information.

The following information is supplemental to Appendix C, Section 5.

5.0 SLUDGE HANDLING

- Filter Press
  - One Filter Press – Pacific Press Company, Model #P12M232A-50CR
  - Filter Press Feed Pump – Air operated diaphragm – TBD
  - Sludge Steady Head Tank – TBD
  - Centrate Surge Tank

    Tank:

    Capacity – 52.6 gal
    Diameter – 30 inches
    Height - 42 inches
    Material - Steel
    Mixing – No

MANUFACTURER OPERATIONS AND MAINTENANCE MANUALS FOR THE FILTER PRESS

Attachment 7
Manufacturer Operations and Maintenance Manuals
Index

1. 1200 mm Filter Press Operation & Instruction Manual.
2. 1200 mm Filter Press Drawing
3. 140015C- Automatic Plate Shifter Operations & Maintenance Supplement
4. 140017B- E-stop Operation Rapid Stop Switch Push-Pull Cable
5. 140018B-Bombay doors Manual
6. 140040B- Light Curtain System Manual
7. 140122B-Electric Hydraulic Manual

1200 mm Filter Press Operation & Instruction Manual

1200 mm General Manual 1

Unloading Instructions 2

Semi Automatic Plate Shifter 3

Electric Hydraulic Manual 4

Quick Stop Operation Manual 5

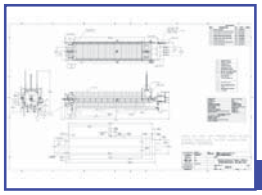

Drawings 6

Certified Vendor Information 7

PacPRESS
PACIFIC PRESS COMPANY

2418 Cypress Way • Fullerton, CA 92831
714.525.0630 • 800.878.8029 • fax.714.525.2664
www.pacpress.com

FILTER PRESS OPERATION & INSTRUCTION MANUAL

MODEL 1200 SERIES

PACIFIC PRESS CO.

140114

1.0 TABLE OF CONTENTS

1.0 TABLE OF CONTENTS 3
- 1.1-Specifications 4
- 1.2-Partslist 5
- 1.3-Component identification 6

2.0 INTRODUCTION 8
- 2.1-Offloading a filterpress 9
- 2.2-Forklift-off loading procedure 9
- 2.3-The lifting procedure 11
- 2.4-Off-loading with an overhead crane 13

3.0 SAFETY 17

4.0 INSTALLATION 18
- 4.1-Installation-forklift,craneor hoist 18
- 4.2-Storage 18
- 4.3-Mounting 18
- 4.4-Connections 19
- 4.5-Airline 19
- 4.6-Airblowdown&fluidpump 20

5.0 START-UP&OPERATION 21
- 5.1-Aboutyourpress 21
- 5.2-Start-up 21
- 5.3-Openingthepress 22
- 5.4-Closingthepress 23
- 5.5-Filtrationcycle 24
- 5.6-Operation thermal shock & filter plates 24

6.0 AIR BLOWDOWN 26

7.0 CAKE DISCHARGE 27

8.0 SHUTDOWN 28
- 8.1 - Normal shut down on 630-1500 series automatic closure presses 28
- 8.2 - Normal shut down on 800-1500 series automatic closure with electrical controls (AIS) 28
- 8.3-Rapid shutdown 28

9.0 MAINTENANCE & SERVICE 29
- 9.1-Filter cloth maintenance 29
- 9.2-Filter plate seal (gasketed only) 31
- 9.3-Filter cloth washing 32
- 9.4-Acidwashing 31
- 9.5-Maintenanceofcomponents 32
- 9.6-Hydraulic oil 32
- 9.7-Expandingyourfilterpress 33

10.0 CORE BLOWDOWN (optional) 35

11.0 PRECOAT&BODYFEEDSYSTEM(optional) 36
- 11.1-Precoat 36
- 11.2-Bodyfeed 36

12.0 CONVEYORS(optional) 38

13.0 STANDARD TERMS & CONDITIONS (optional) 39

14.0 GLOSSARY 41

Note: These instructions are intended for use by qualified personnel for instruction and maintenance purposes. Reproduction in whole or in part in not permitted without the express written permission of Pacific Press Company.

1.0 TABLE OF CONTENTS

1.1 - Specifications

MODEL #:	P12G132A-75
PART #:	250006-028
SERIAL #:	1288 & 1289
DIMENSIONS:	Please see drawing section
HOOK UP REQUIREMENTS:	Inlet: 4” RF Flange
Outlet:	4” RF Flange
Power:	380V / 3 PHASE / 50 Hz
HYDRAULICS:	Electric
PLATE:	1200 mm polypropylene
PLATE STYLE:	Gasketed
CLOTHS:	PMM12-EGI
FRAME:	Steel primered and painted with polyurethane enamel
HYDRAULIC PRESSURE SETTINGS:	3400 PSI
PIPING:	SS 304

1.0 TABLE OF CONTENTS

1.2 - Parts list

MODEL 1200 SERIES

1. Head Filter Cloth 1225 mm	PMM12-EGH
2. Tail Filter Cloth 1225 mm	PMM12-EGT
3. Intermediate Filter Cloth 1225 mm	PMM12-EGI
4. Head Filter Plate 1225 mm	535062
5. Tail Filter Plate 1225 mm	535066
6. Intermediate Filter Plate 1B 1225 mm	535063
7. Intermediate Filter Plate 3B 1225 mm	535064
8. Plate O-ring - Large (Perimeter)	None
9. Plate O-ring - Small (Eyelet) 4/set	None
10. Hydraulic Cylinder	460030
11. Air Blowdown Pressure Regulator	450169
12. Wear pad	320527
13. Gauge 0-100 psi	200CB
14. Gauge 0-7500 psi	5000CB
15. Scraper paddle	475-40

Note: When ordering parts, please indicate the filter press serial and model number found on specifications sheet (page 4), and then call out the item part number.

1.0 TABLE OF CONTENTS

1.3 -Component identification

TAIL VIEW

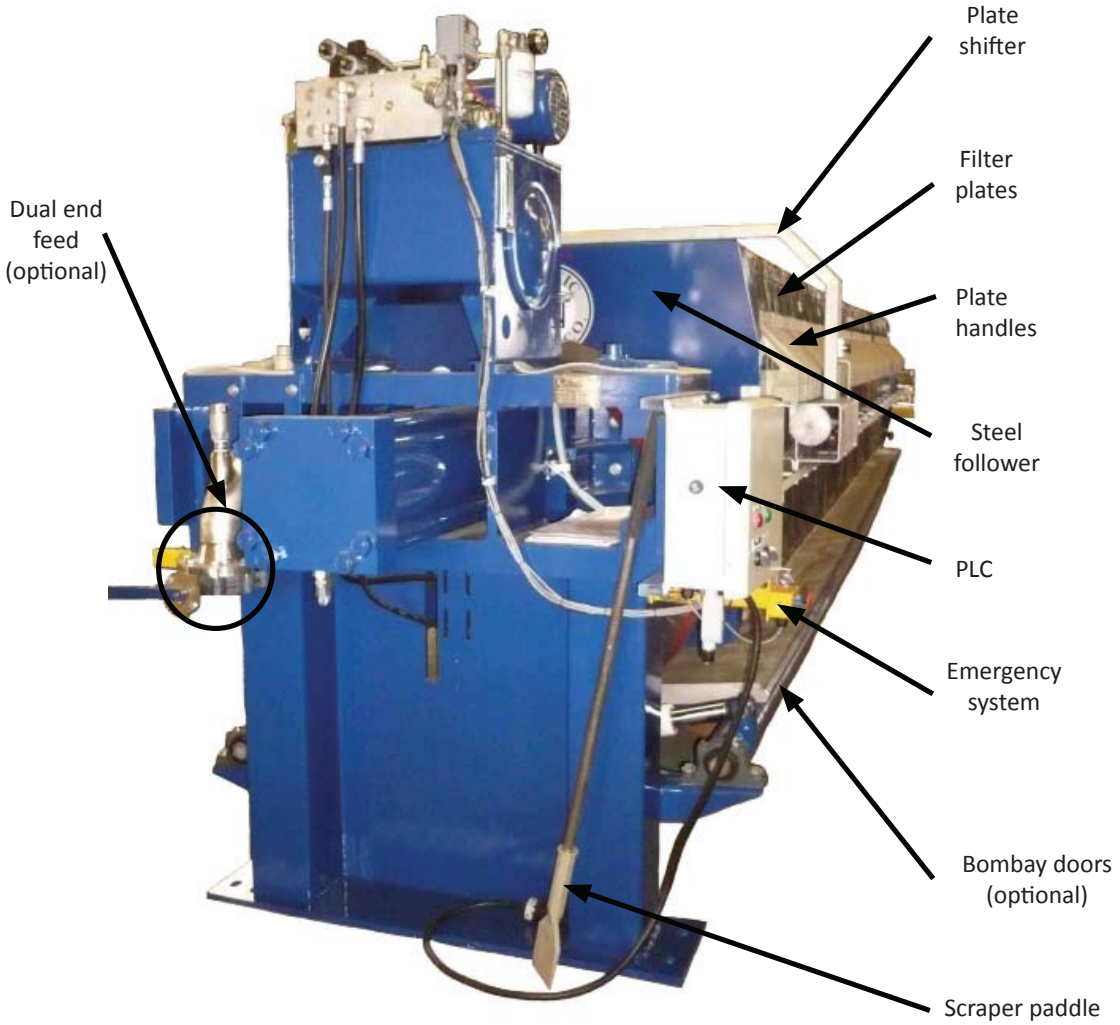

Note: The pictoral is for illustration purposes only. This is the universal design and your unit may differ.

1.0 TABLE OF CONTENTS

HEAD VIEW

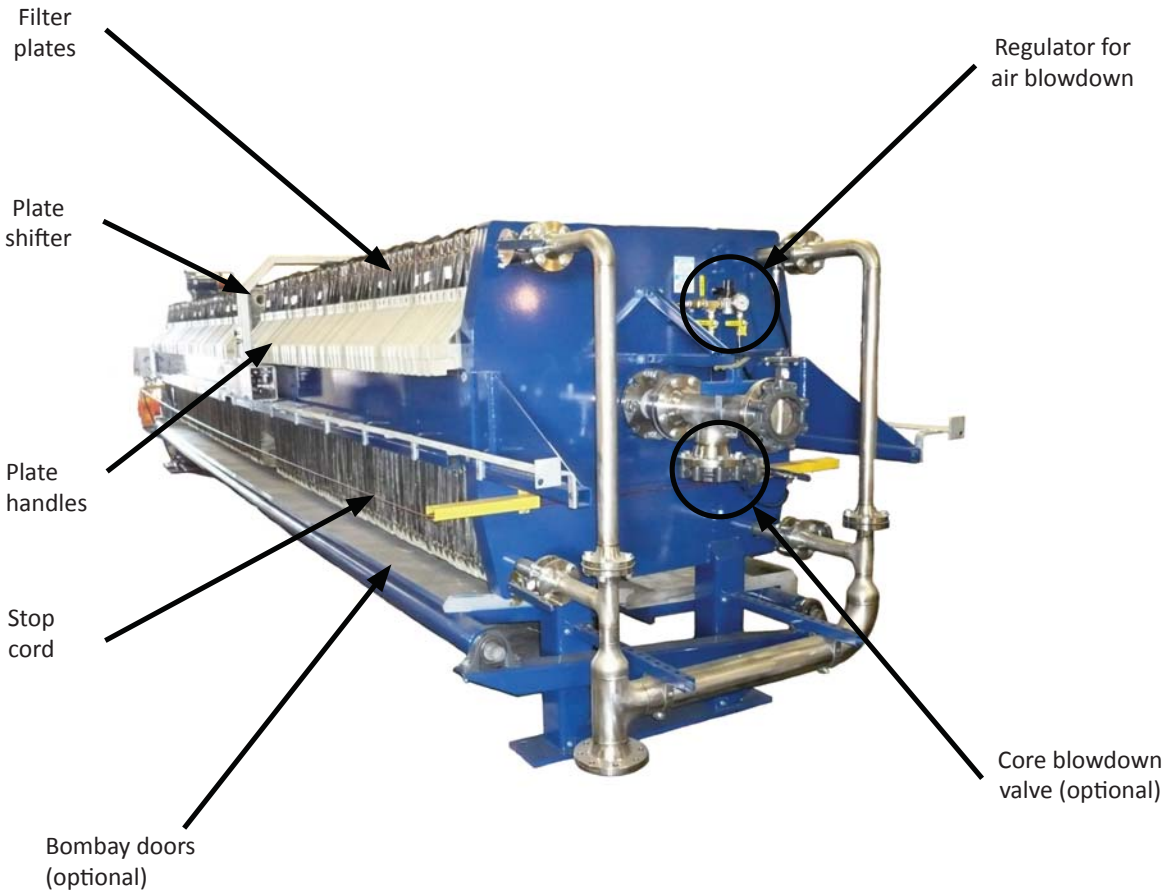

Note: The pictoral is for illustration purposes only. This is the universal design and your unit may differ.

2.0 INTRODUCTION

Congratulations on your selection of a filter press from Pacific Press. Our presses are among the most technically advanced filter presses in the world. All our presses are constructed of the finest materials and are built to provide you with years of trouble-free service. Your press has been designed to meet the needs of your specific process application.

As your process or applications change, your Pacific Press can usually be adapted to these changes with relatively minor modifications. Your Pacific Press Representative along with our technical staff can assist you in determining what modifications, if any, need to be made to your filter press. Your press has been designed to be flexible to meet the needs of a wide range of process applications.

Before attempting to install or operate your press, please read this manual carefully. This will insure that your new press is operated in a safe and efficient manner. If you have any questions regarding the safe operation of this press, please contact Pacific Press Co. (PPC) immediately at 1.800.878.8029.

Upon receiving your filter press, please inspect it and all components for any visible damage. If any visible damage has occurred notify the trucking company immediately as you will have to make a claim with them. It is best to make a notation on the freight bill of any damage, point out the damage to the truck driver and have the truck driver sign a notation as to the damages.

2.1 - Offloading procedures

There are two basic ways to off-load a filter press:

- Use of a forklift;
- Use of an overhead crane.

The first objective is to determine what is feasible and most cost effective for your operation. Off-loading by forklift requires a local utility supply (compressed air or electricity depending on the model) to open the press and lift the press from the side rails. If you do not have a utility supply, an overhead crane must be used in which the press is off-loaded in the closed position.

1. Forklift off-loading requirements:

The first requirement for filter press off-load is the availability of a utility supply of either compressed air or electricity.

- Do I have compressed air available ?
- Do I have a utility available?
- If no, then you must off-load with a crane. See section 4.0 for details.

2. How do I know if the utility supply required is air or electricity?

- The majority of standard filter press sizes 470mm thru 1000mm are air operated.
- The majority of custom or automatic (PLC based) operating filter presses are electrically operated.
- Standard filter presses 1200mm thru 1.5 x 2.0 are all electrically operated.

Refer to your order documentation and drawing to verify this information. If in doubt contact the PPC at 1.800.878.8029.

For actual air or electrical connection requirements refer to the filter press general arrangement drawing in drawing section . If there is a question, please contact PPC.

3. If I can supply the required utility supply to my press are there any other requirements?

You must have a forklift capable of:

- Lifting the required capacity.
- Meeting the required forklift “reach” or fork length.

4. How do I determine if the forklift can lift the filter press?

You will need to determine the appropriate weight of your filter press by locating it on the drawing chart. A copy of the drawing chart is located in individual filter press size general arrangement chart in the drawing section.

Please note that the forklift must be capable of lifting the weight of the filter press at the height that is referenced on the forklift length chart on the following page. (Chart 2.1.1)

If the forklift does not meet this requirement then an overhead crane must be used.

5. How do I determine the correct fork length?

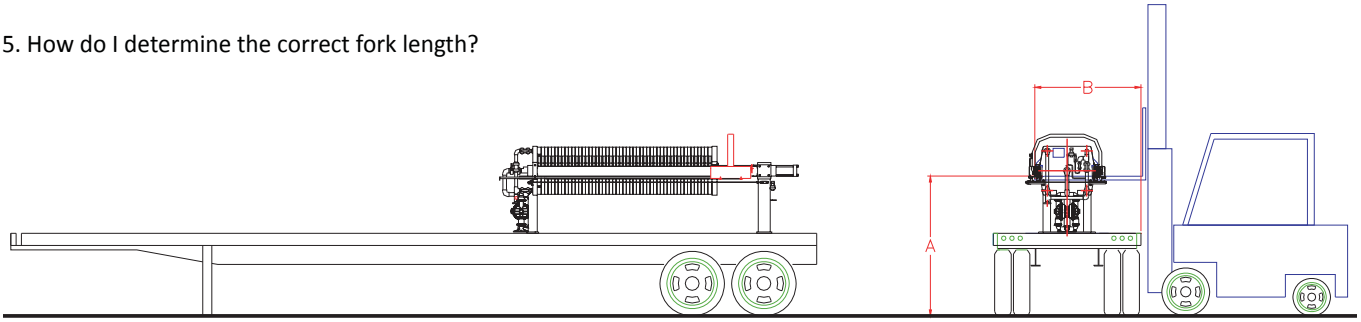

The following chart will provide the proper fork length required for each size filter press. The requirements are based on a 102-inch deck. For 96-inch decks deduct 3-inches *(CHART 2.1.1).*

Notes: Refer to the drawing section for accurate filter press weight (locate drawing chart by press size).

Filter Press Size	A Lift H	B Min. Reach
470	94.0	66.0
630	97.0	70.0
800	99.0	72.0
1000	102.0	78.0
1200	104.0	82.0

CHART 2.1.1 - Filter off-loading requirements. Measurements are based on a 102 inch deck.

2.2 - Fork lift off-loading procedure

To lift the filter press off the flatbed truck it is necessary to:

1. Remove the tarp from the filter press.

The truck operator should have a tarp covering the filter press and have it secured in place on the truck with chains or straps *(FIGURE 2.2.1)*. Allow the operator to take responsibility for untarping the filter and removing all securing chains and/or strap material. Please note any apparent damage to the filter press on the lading bill and contact PPC immediately.

FIGURE 2.2.1 - Filter press will be secured by the truck operator

2.0 INTRODUCTION

2. Once the tarp and chains straps are removed the press will need further preparation.

The safety cable will obstruct lifting of the press by the side rails. Please unbolt the tension side of the cable that is attached to the safety cable bracket *(FIGURES 2.2.2, 2.2.3).*

FIGURE 2.2.2 - The safety cable adjustment bracket is located on the non-operational side of the tail end of the filter press.

FIGURE 2.2.3 - To remove the safety cable, un-thread (counter clockwise) the bolt on the end of the tension eyebolt.

3. Next, remove the safety cable so that it is not in the way of the forks.

FIGURE 2.2.4 - Once the safety cable is out of the way, the side of the press is accessible.

4. Connect the utility.

Reference the drawing in the drawing section for the appropriate connection size between (NPT) the airline male and female quick disconnect type fitting. *(FIGURES 2.2.5, 2.2.6).*

FIGURE 2.2.5 - Once the connection is made the isolation ball valve can be opened and the press opened.

2.0 INTRODUCTION

FIGURE 2.2.6 - To open the press, the hydraulic pack valve is turned to the left. To close it, is turned to the right.

2.3- The lifting procedure

With the filter press now open and the ram fully retracted, the lifting process can begin.

1. Begin by spreading apart the filter plates to allow space for the forks to lift *(FIGURE 2.3.1).*

FIGURE 2.3.1- Spread the filter plates in two locations so that the forks will have access to the rail.

Remove some filter plates if necessary.

2. Next, drive the forklift close to the bed of the trailer and line up the location of the lifting points. Be sure to take the center of gravity of the filter press into account when lifting. This may require more than one lift to locate the best point *(FIGURE 2.3.2).*

FIGURE 2.3.2 - Before contacting the forks with the bottom of the rails use a cloth or cardboard to ensure that the forks will not scratch the rails.

3. Lift the filter press by the rails. An extra amount of the forks should be exposed to ensure contact should the press slide *(FIGURE2.3.2).*

Lift the filter press straight up to clear the truck *(FIGURES 2.3.3, 2.3.4).*

FIGURE 2.3.3 - Correct lifting of the press.

2.0 INTRODUCTION

FIGURE 2.3.4 - The forklift must be able to lift the press high enough to clear the truck.

4. There are two ways to remove the filter press from the truck:
-Either the forklift can lift the press, then back up and set down the filter press.
-Or the forklift can lift the press then the truck driver can move the truck forward to make space for the press to be set down. (FIGURE 2.3.5).

FIGURE 2.3.5 - With the truck moved forward, place any removed plates back in the press.

5. Once the press is on the ground, re-install the safety cable and adjust it *(FIGURE 2.3.6).*

FIGURE 2.3.6 - Place the eyebolt through the hole in the bracket and tighten the bolt hand tight.

6. The next step will require two people. The tension of the cable will have to be adjusted by one person while the other person monitors the result of the adjustment *(FIGURES 2.3.7 - 2.3.9).*

FIGURE 2.3.7 - Cable control panel.

FIGURE 2.3.8 - The cable tension is shown adjusted properly. The black line is in the center.

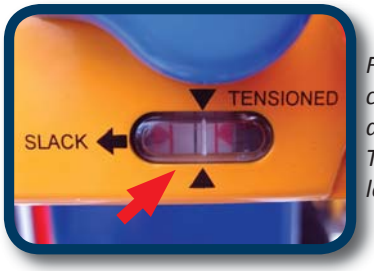

FIGURE 2.3.9 - The cable tension is shown adjusted improperly. The black line is to the left.

With the safety cable in place the filter press is ready for installation.

2.0 INTRODUCTION

2.4 - Off loading with an overhead crane

All overhead cranes lift weight from a single hook. The two basic delivery systems for a crane are either mounted to a truck body or fixed to a building. Due to the rectangular size and a typically long overall length of the filter press, a method is required for picking up the weight from four points on the press and securing that to a single pick up point. A spreader bar or appropriate sling must be used and provided by trained, experienced machinery moving personnel or certified crane operator *(FIGURE 2.4.1).*

FIGURE 2.4.1 - A typical set-up for off-loading a filter press with an overhead crane.

2.0 INTRODUCTION

1. Additional instructions are for certified or trained operators

To determine the weight of the filter press refer to the individual filter press size general arrangement chart provided at the end of this section.

2. Eyebolts

Eyebolts (they are not supplied with filter press) will be required to be threaded in to four locations on the filter press. Refer to the following chart of press sizes for appropriate diameter and thread sizes of eyebolts *(CHART 2.4.1).* Use only fixed or swivel style eyebolts *(FIGURE 2.4.2).*

Press Size	Capacity	Dry Weight	# of Tapped Holes	Tap Size On Head	McMaster Carr Eyebolt P/N	Load Limit of Eyebolt
470	5 ft3	1,784	4	1/2 - 13 UNC	3014T491	2,400
630	12 ft3	3.623	4	3/4 - 10 UNC	3014T531	5,000
800	30 ft3	8,801	4	3/4 - 10 UNC	3014T531	5,000
1000	50 ft3	14,433	4	1 - 8 UNC	3014T55	9,000
1200	100 ft3	30,850	4	1 - 8 UNC	3014T55	9,000

CHART 2.4.1 - Press size to eyebolt sizing chart.

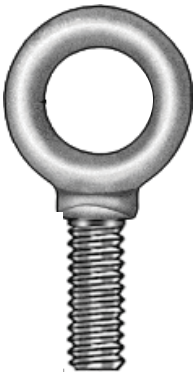

FIGURE 2.4.2 - Image of a standard eyebolt.

3. The four locations for the eyebolts on the filter press are shown *(FIGURE 2.4.3).*

FIGURE 2.4.3 - The filter press is supported at four points, two for the head and two for the tail.

2.0 INTRODUCTION

4. If the eyebolts are too long for the amount of thread, they may be secured by the addition of a nut *(FIGURES 2.4.5 - 2.4.7).*

FIGURE 2.4.5 - Eyebolt with correct thread length.

FIGURE 2.4.6 - Incorrect threading of eyebolt. The eyebolt thread length is too long.

FIGURE 2.4.7 - Correct threading of eyebolt. Exposed thread can be secured with the addition of a nut.

5. Securing lifting chains to spreader bar.

Standard lifting chains are used to lift the press at the eyebolts *(FIGURES 2.4.8, 2.4.9).*

FIGURE 2.4.8- The spreader bar runs parallel to the filter press.

FIGURE 2.4.9 - The lifting chain is bolted to the spreader bar.

2.0 INTRODUCTION

The hoist hook eye is attached to the spreader bar *(FIGURE 2.5.0).*

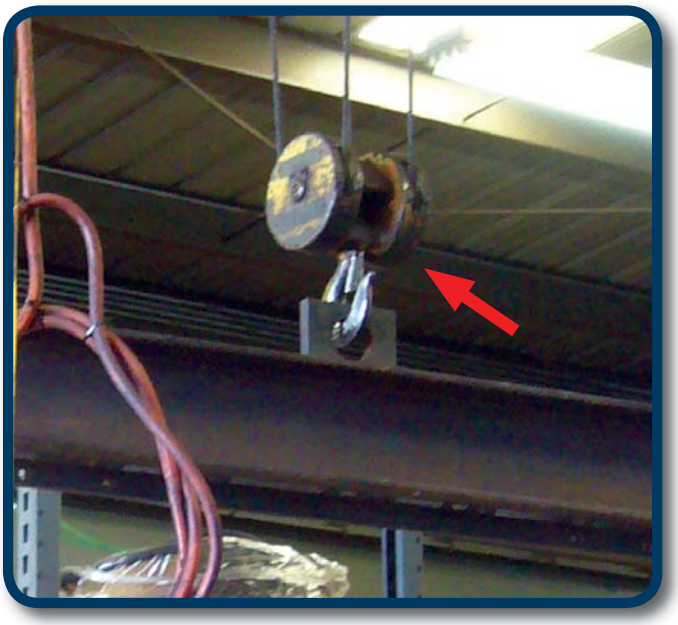

FIGURE 2.5.0- Hoist hook eye.

6. Off-load the filter press.

With the eyebolts securely in place, and the lifting chains attached from the eyebolts to the spreader bar, the filter press is ready for off-loading using the overhead crane.

3.0 SAFETY

This equipment has been designed to be functionally safe and operationally simple to use.

This press should only be operated by individuals that have completely read this operation manual and have familiarized themselves with the filter press prior to operation.

Operators and safety monitors should note the following :

1- Hydraulics- The hydraulic system maintains pressure. Ensure that the hydraulic pressure is relieved before attempting maintenance on the system.

2- Process - The press contents are under pressure up to 100 psi. If the press is opened while under fluid pressure, the contents will spray.

3- The unit runs on electricity. Be sure to follow all lock out/tag out procedures.

4- The unit runs on compressed air.

All service or repair work on this unit must be done by first consulting PPC (See Maintenance and Service - Section 5.0).

CAUTION: It is important to know that this press can cause serious personal injury or death if closed while any portion of the body is inside or between the plate closure areas.

4.0 INSTALLATION

4.1 - Installation - forklift, crane or hoist

The filter press can be moved using a crane, hoist or forklift with a spreader bar and lifting chains or straps. Remove the plugs located on top of the head and the top of the tail sections and replace with eyebolts. Use chains or straps to secure in place.

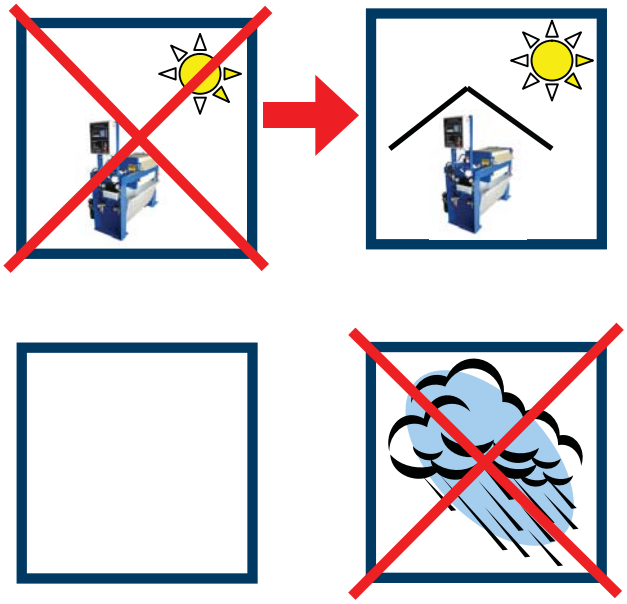

4.2 -Storage

Store the filter press in a dry, well ventilated building that has a temperature range within 40 - 90 degrees F. If the press is stored outside, cover the entire press. Be sure to keep the press out of direct sunlight but allow for adequate ventilation. If the press is to be stored for any length of time, it is recommended that a corrosion inhibitor be applied to all surfaces subject to rust.

The filter press must not be exposed to temperatures below 32°F (O°C) as the filter plates may become brittle and crack. In addition, the plates do not have any ultraviolet inhibitors and may discolor if not covered with an opaque material when stored outside. Filter plates are sensitive to thermal shock and may crack if there is over a 30°F differential in the temperature of the filter plates vs. the fluid temperature (consult factory for exceptions). Filter plates of other materials are available for more adverse conditions.

Filter plates are best stored hanging in the filter press. If stored elsewhere, they should be on a flat pallet. After plates are stored, they must be brought up to room temperature, which is within 40 - 90 degrees F, before being put into service.

CAUTION: Protect filter press and plates from open flames, welding torches and heaters as plates are plastic and will burn. Fumes from burning plastic are toxic. Burning plastic can ignite other combustible material.

4.3 - Mounting

The press must be mounted on a flat, level surface for proper alignment. All fluid valves are operated from the head of the press. The controls are all located on top or side of the tail section of the filter press. Leave approximately 3 feet of working space around all sides of the press.

FIGURE 4.3.1 Head of the press

4.0 INSTALLATION

Head is bolted, fixed tail floating.

If you have not previously done so, carefully prepare a level and square mounting foundation before beginning installation or operation of your filter press.

With the press in the approximate location, make sure the head plate is lined up properly both horizontally and vertically. The head base may now be bolted to the surface. After the head base is secure, the press may be pressurized. Close the press (See section 5.0). After the filter press is under full operating pressure, bolt the tail section into place. The tail base plate is slotted which will allow the filter press to expand and contract *(FIGURE 4.3.2)*.Do not tighten the tail bolts down. They must allow the press to expand and contract.
Tightening or bolting down the tail will result in a void of warranty .

FIGURE 4.3.2 - Untightened bolt slots

4.4 - Connections

Once the filter press is mounted in place, the piping may be hooked up. If the press came with a pump, the inlet size must be matched with the piping. The new pump must be connected to the fluid source with flexible hose or solid piping. If a new pump was not purchased with the press, the inlet must be connected to the discharge of an existing pump *(FIGURE 4.4.1)*.
(REFER TO PAGE 4 FOR CONNECTION SIZES).

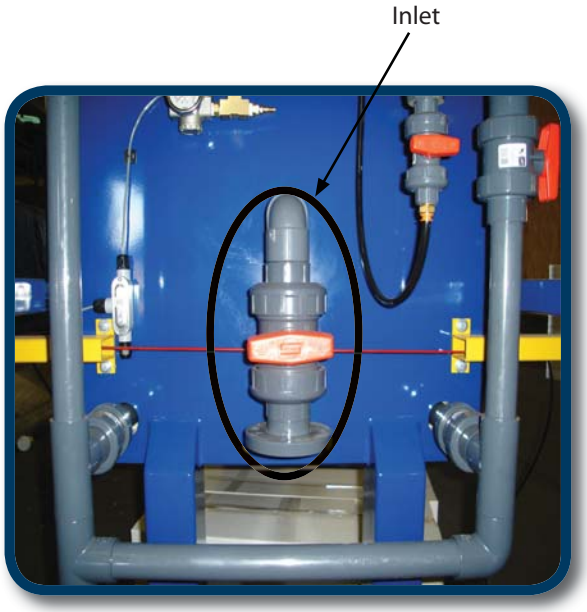

FIGURE 4.4.1 - Inlet if the press is delivered without pump

Note: The standard pump that is recommended for use with this press is an air operated diaphragm type.

It is recommended that any piping between the pump and press be flexible, due to the pulsation of diaphragm pumps. The outlet is to be piped next. This may be flexible or solid pipe.

Note: Discharge piping must not rise above the lowest discharge eye of the press or filtered fluid may flow back into the filter press once opened.

4.5 - Airline

It is necessary to hook up a minimum of one compressed airline to operate the hydraulic closure and air pump/ blowdown. On larger presses an auxiliary line may need to be hooked-up directly to the air blowdown. This is located on the left side as you face the tail section of the press. A desiccant or refrigeration dryer (*OPTIONAL*) *(FIGURE 4.5.1)* must be located upstream from the filter press.
(REFER TO PAGE 4 FOR CONNECTION SIZES).

4.0 INSTALLATION

FIGURE 4.5.1 - Desiccant dryer (optional)

4.6 - Air blowdown & fluid pump

FIGURE 4.6.1 - Regulator for air blowdown

FIGURE 4.6.2 - Fluid air diaphram pump

On all presses there is a at least one airline which feeds the hydraulics and the air blowdown. If a pump is purchased with the filter press it may need to have an auxiliary compressed airline installed.
(REFER TO PAGE 4 FOR CONNECTION SIZES).

Notes: Air supplied to the pump and air blowdown must be filtered.

When a fluid pump is pre-mounted to the press, it does not require a lubricator. It is not necessary to add any units upstream from the pump.

Compressed air supplied to the hydraulics on the press must be clean, dry and oil free (instrument grade). If the air is not dry and oil free, the warranty is void. A refrigeration dryer or desiccant dryer is required to provide this grade of clean air.

Note: Do not open the press while the fluid pump is on.

5.0 START-UP & OPERATION

5.1 - About your press

All presses are stationary filter presses designed for dewatering slurries. This press is shipped from the factory completely assembled, with all air line and hydraulic components tested to insure quality performance. The hydraulic closure of the press is manual, semi-automatic, or automatic depending on your selection. Compressed air is the only external requirement to operate all standard presses. Refer to the accessory section for additional requirements.

A pump is used to transfer fluid into the filter press. Suspended solids are retained by a woven filter cloth. Solids will gradually build up inside the filter chamber under pump pressure (*FIGURE 5.1.1*). Once the filtration cycle is complete the filter press is ready for the air blowdown cycle. The air blowdown cycle purges the press of residual fluid. Next, the filter "cake" is ready to be discharged. The press will first have to be opened and the filter plates separated. A plastic spatula is used to assist in discharging the filter cake.

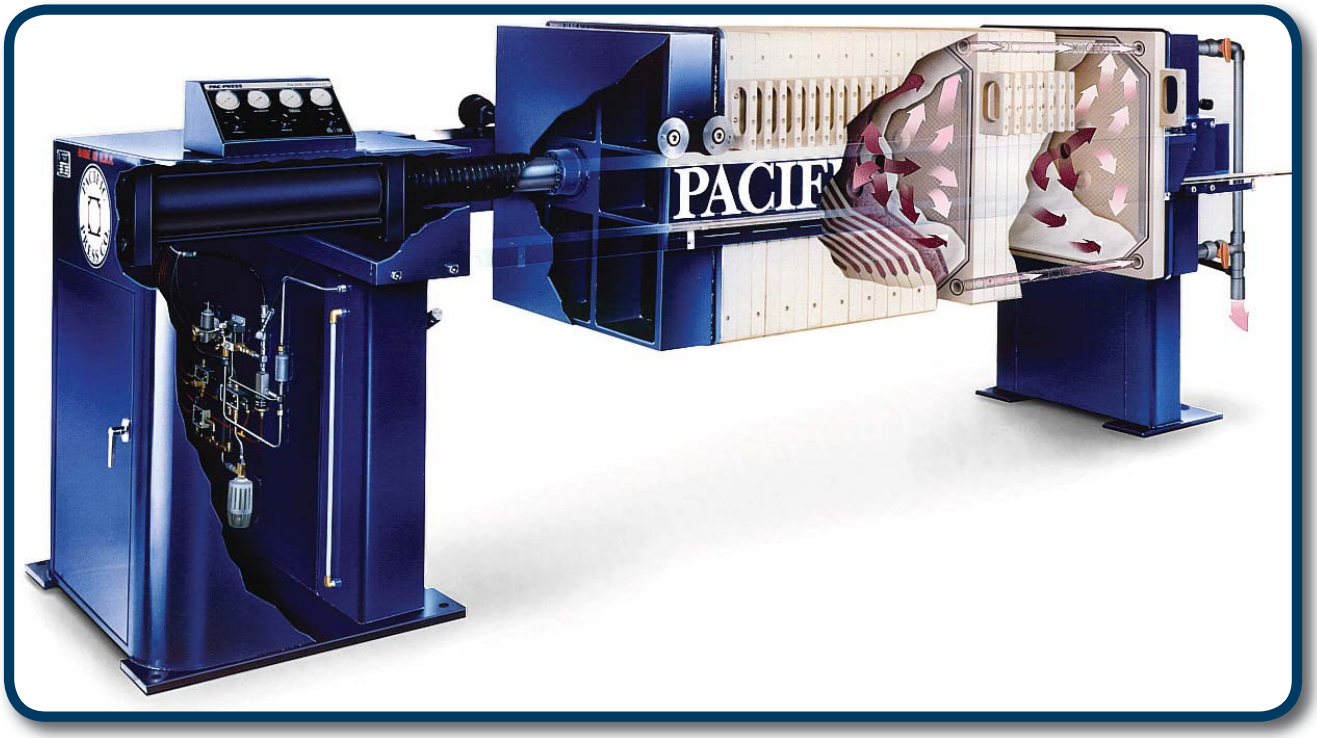

FIGURE 5.1.1

5.2 - Start-up

The press is shipped in the closed position. It is necessary to first open the press to inspect the seals and cloths for integrity.

5.0 START-UP & OPERATION

5.3 - Opening the press

For semi-automatic filter press, once the press is ready to be opened the level must be turned to the left to open the press. (FIGURE 5.3.1)

FIGURE 5.3.1

The follower will retract and the filter press plates are now accessible with an optional plate shifter *(FIGURE 5.3.2).*

FIGURE 5.3.2

If your filter press comes with the AIS option, open the press by activating the open press switch/button. Then the alarm will shut-off when the follower is completely retracted.

After opening the press, inspect one by one the cloths for proper seal and make sure all cloths are clean *(FIGURE 5.3.3).*

FIGURE 5.3.3

In addition, for the air blowdown to work correctly, each plate must be in an alternating sequence. The head plate is a "one-button" plate (buttons are the small markings on the edge of the filter plate handle). The next plate is a "three-button", the next a "one button", the next a "three button", and so on, alternating every plate *(FIGURE 5.3.4).*

5.0 START-UP & OPERATION

FIGURE 5.3.4

In the air blowdown cycle, this allows air to travel from one side diagonal across the filter cake and out the opposite side of the plate. This flow sequence is used to effectively purge excess fluid and dry the filter cake.

5.4 - Closing the press

To close the 1200 Series filter press with semi-automatic closure, turn the hand lever to the right all the way and allow the pump to stroke to the full operational hydraulic pressure (*FIGURE 5.4.1*).

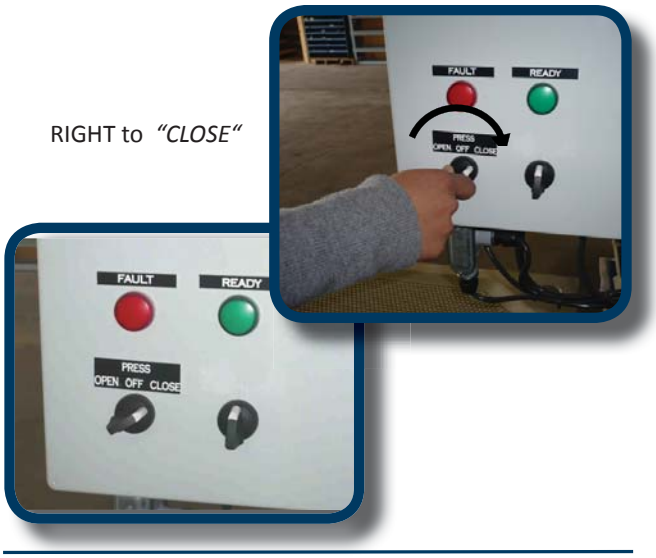

FIGURE 5.4.1

The pump will build up pressure until the preset pressure is reached and then it will stop. The hydraulic closure switch is to remain in the "closed" position for the duration of the filtration cycle. With the hydraulic cylinder extended, the pressure will force the follower and filter plates together, providing a tight seal. The gauge showing the hydraulic pressure (*FIGURE 5.4.2*) should reflect the preset pressure on the press specifications sheet (page 5).

FIGURE 5.4.2

If your filter press comes with the SOP option, close the press by activating close press switch/button. The alarm will sound while the follower is moving. When the press is at operating pressure. The hydraulic pump will stop (but may cycle occassionally to maintain closure pressure)
NOTE : on systems supplied with the Automated Integration System, "Close Press" is included in the auto cycle.

Note: At any time during the cycle, the stop cord can be pulled in order to interrupt the cycle. See the SOP section.

5.0 START-UP & OPERATION

5.5 - Filtration cycle

Once the press is in the closed position and under full operating pressure, fluid processing can begin. If a Precoat or Bodyfeed is to be used, see Precoat and Bodyfeed section.

Prior to starting the pump, all inlet and outlet valves should be open, except the blowdown air line valve, which is in the closed position.

The following is for all presses that came with the optional fluid process pump. With all presses that have pumps attached there are two regulators bolted to the head of the press *(FIGURE 5.5.1).* One regulator operates the air blowdown, the other operates the air diaphragm pump

FIGURE 5.5.1 - Head of the press showing the regulators

5.6 - Operation thermal shock & filter plates

1. Plates should not be operated in excess of the recommended temperature, pressure and process conditions.

2. Pacific Press Company can provide two styles of filter plates designed to operate at a maximun of low pressure (100 psig) or high pressure (225 psig).

3. Filter plates are sensitive to thermal shock. The Pacific Press Company recommendation is a maximum temperature differential of 30°F between the current temperature of the filter plates and the fluid temperature. (Consult factory for exceptions)

4. Polypropylene plates can be used for most applications. But some applications can be too aggressive for polypropylene plates. Solutions with hydrocarbons (solvent or oil based) should be avoided.

5. Keep the discharge ports clear and free of any blockages or solids build-up. Check and clean after each cycle.

6. Regularly inspect the filter plate drainage surface and filtrate discharge ports and keep clear of any solids build-up.

7. The pressure and wash plates must be in the correct position when using chamber plates ported for a washing /air blow application. Unbalanced pressure can cause plate damage and poor wash performance.

8. During the filtration cycle, unbalanced pressure can cause damage to the filter chamber and should be avoided. To reduce or prevent unbalanced pressure from forming in the plate stack by following:
-For each cycle, feed ports must be cleaned because blockage will cause immediate, full and unbalanced pressure.
-Over filling of the chambers can cause feed port blockage and will lead to unbalanced pressures.
-Inspect regularly port holes, drain channels and drainage surfaces and clean of any build ups and deposits. Any type of blockage or filtrate flow restrictions will lead to differential pressures.
-High speed feed rate should be avoided. Where fast filling of the plate stack is required, feed rate should be increased gradually.
-Don't interrupt and start again the filtration cycle.

5.0 START-UP & OPERATION

-Extreme vibrations in the feed line and pressure spikes must be avoided (Pressure spikes above the pressure rating can cause leakage at seal surfaces and cause plate breakage).
-Slurry must be consistent and homogeneous throughout the cycle. Slurries that are stored in tanks should be agitated.
-Don't use a sharp or pointed instrument to scrape or clean the filter cloth.
-Filter cloths should be regularly maintened and fit well. Sagging or stretching of the cloth can block ports and cause wrinkles in the sealing area which can result in unbalanced pressures.
-Only one style of cloth must be used on all plates in the filter press.
-The cloth permeability must be the same for all filter cloths in the filter press.
-The cloth should be cleaned or replaced when the individual cloth becomes more blinded than the others in the filter press.
-Immediately replace filter cloth with holes.
-In the same press, new and used filter cloth should not be mixed . Different permeability rates can be created and the result will be differential pressures in the filter press. If new filter cloth is used with existing filter cloth, the filter press must be washed to insure that the older cloths are cleaned and not blinded.

CAUTION: Unbalanced pressure can be caused by the installation of new filter cloth with existing blinded filter cloth. The result would be damage to the filter plates.

If a number of cloth failures occur in a short period, it is best to replace all of the filter cloth in the plate stack.

-All chambers should be filled with solids, prior to discharging cake, to achieve optimum cake formation, moisture reduction and cake discharge. Wet or sloppy cake is an indication that proper filling is not taking place and this can lead to unbalanced pressures and possible plate damage.

6.0 AIR BLOWDOWN

The filter can come with manual valves or automatic valves. The description below is for manual valves. For the automatic valves, refer to the SOP manual.
The air blowdown cycle removes residual liquid in the filtrate lines and aids in drying the filter cake. The filter press must remain closed and under hydraulic pressure to run this cycle. Make sure all airline regulators located at the head of the filter press are "off" *(FIGURE 6.0.1 and FIGURE 6.0.2).* Then turn the inlet valve (#3) to the press to the closed position. The upper (#2) and lower (#5) right air blowdown manifold valves (as you face the head of the press) are to be closed. The upper left valve (#1) is to remain closed while the lower left (#4) valve is to be turned open. Slowly open the airline valve that will allow air into the air blowdown manifold.

Position *"OPEN"*

Position *"CLOSED"*

FIGURE 6.0.2

Valve	1	2	3	4	5	6
Process	O	O	O	O	O	X
Air blowdown	X	X	O	O	X	X

CHART 6.0.1- Proper valve configuration

Increase flow by opening the air blowdown regulator (turn clockwise) *(FIGURE 6.0.3).* Do not shock the press with air. Process fluid will be purged from the filter chambers through the discharge line. The air is to be turned on for an approximately 5-30 minute period with at least 30-40 psi. The actual time may vary due to the density of the filter cake. The denser the cake the shorter the air blowdown cycle time. The proper volume of air is shown in the drawings of the filter press. A "rule of thumb" is 2.5 CFM per cu. ft. of filter volume.

After the air blowdown cycle is complete the solids are ready to be discharged. Turn off the flow of air to the air blowdown manifold. Open the top right blowdown manifold valve to relieve any trapped air. Close the air blowdown valve (#6). Follow instructions for opening the press under Section 5.0.

FIGURE 6.0.3

NOTE : AIRBLOWDOWN REQUIRES FILTERED INDUSTRIAL GRADE AIR. DRY AIR IS NOT NECESSARY.

7.0 CAKE DISCHARGE

1200 mm size plates will have to be separated with an optional plate shifter : either a semi-automatic plate shifter or an automatic plate shifter. Once the follower is retracted, the tail plate is to moved first.

FIGURE 7.0.1 - Moving plates with semi-automatic plate shifter
See the semi automatic plate shifter manual

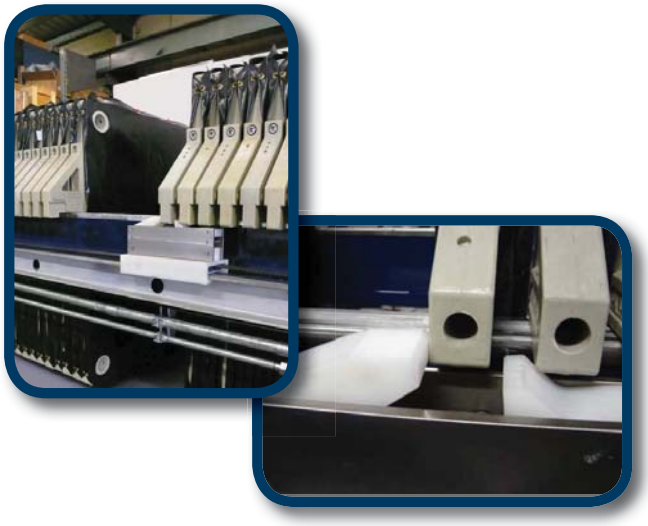

FIGURE 7.0.2 - Moving plates with automatic plate shifter
See the automatic plate shifter manual

Prior to separating the filter plates the cake material container must be in place. A sludge cart is the most commonly purchased option for filter presses and is an inexpensive method and is easy to handle with a fork lift. A conveyor or elevated platform can also be used to discharge solids into a container for removal. Whatever method is to be used, be sure it is in place prior to opening the filter press as occasionally residual liquid drains out, prior to the filter cake being discharged.

With the cylinder retracted the follower plate can be separated from the plate stack. By pulling back the tail plate there will be access to the first filter chamber. If the cake has formed properly, it will release from the chamber easily. A plastic spatula is to be used to remove the filter cake and scrape out any remaining solids *(FIGURE 7.0.3).*

FIGURE 7.0.3 - Cake discharge

Once the bulk of the cake is removed and if it is necessary, the cloth can be further cleaned with a nylon brush and water or by using a power washer. It is important to make sure the plate's perimeter is clean especially on gasketed filter plates. If the seals are not clean, it increases the possibility of the plate leaking. The next plate may be moved forward and the cleaning process repeated. Make sure to inspect all surfaces and verify that all of the sealing edges of the plates line up. If any plates are removed for cleaning, make sure they are put back in the same order and if gasketed, that the gasket surface faces the tail of the press. If the cloth still does not come clean it is a good practice to wash the cloth with a high-pressure washer. This should be done a minimum of once a month to increase the life of the cloth.

8.0 SHUTDOWN

8.1 - Normal shut down on 630-1200 series automatic closure presses

The standard is two airline connections, one for the hydraulics and one for the air blowdown. The hydraulics have a manual ball valve to stop the supply of compressed air. The air blowdown has a regulator and the regulator is normally off. If the regulator is on, the valve supplying air to the blow down may be closed to rapidly turn off air.

Semi-automatic presses can be shut down by turning off the airline connections. Stop the pump by pushing the stop button on the control panel, which will turn it off.

8.2 - Normal shut down on 800-1500 series automatic closure presses with electrical controls (AIS)

Pulling the stop cord during the closing or opening the press will interrupt the cycle. The cycle can be stopped at any time by pressing the stop button on the operator interface.

There are some indicators on the panel control tower know the condition of the press:

Green Light	--	Cycle Running
Yellow Light	--	Cycle Over/Stopped
Red Light	--	Low Hydraulic Pressure

The pump will be stopped automatically with the cycle.

8.3 - Rapid shutdown

630 series and larger filter presses are equipped with a stop cord *(FIGURE 8.3.1)*. This cord will stop the operation of the hydraulic closure when pulled. If the cord is wired into the pumping system, it will also stop the process pump. Once the cord is activated, it must be re-set at the control switch location each time before the filter press can be re-started

FIGURE 8.3.1 - Stop Cord

When the stop cord is pulled (*FIGURE 8.3.2*), the blue selector on the emergency box goes to the "OFF POSITION". Reactivate the filter press by putting the selector on the "RUN POSITION" on the emergency stop (*FIGURE 8.3.3).*

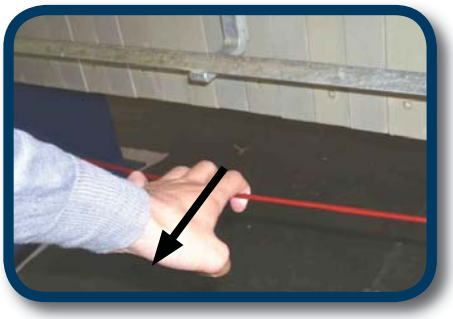

FIGURE 8.3.2

"OFF POSITION" *"RUN POSITION"*

FIGURE 8.3.3

Note: If the press doesn't start when you press the start button, check the emergency stop box and verify the selector on the emergency box in on the "RUN POSITION".

9.0 MAINTENANCE & SERVICE

9.1 - Filter cloth maintenance

The filter cloths need to be changed on a periodic basis. This can be from a one month to a two year period depending on the characteristics of the product being filtered. When the cloths become plugged, the initial flow rate will reduce and the cake center may still be liquid.

To remove the gasketed type filter cloths, force a screwdriver into the groove, under the cloth and pull the material out, use pliers, if necessary. If the cloth will not come out, it can be cut out (*FIGURE 9.1.1).* Slice the filter cloth along the rope edge and pull on the rope to remove cloth. Prior to installing new cloths the cloth groove and plate must be thoroughly cleaned.

For non-gasketed cloths, the cloth is removed by taking it off the cloth dogs and cutting any ties holding the grommets together. (FiGURE 9.1.2)

FIGURE 9.1.1

FIGURE 9.1.2

9.0 MAINTENANCE & SERVICE

When replacing the cloth, it will be necessary to feed one side of the cloth (this is a double cloth) through the center feed port *(FIGURE 9.1.2).*

FIGURE 9.1.2

Once the cloth is pulled through the center port it can be opened up flat for installation. To install the gasketed style cloths a plastic block (available through Pacific Press) and hammer must be used to pound the edge of the cloth into the cloth groove *(FIGURE 9.1.3).*

FIGURE 9.1.3

This is best accomplished by starting at the top, next the bottom then finally diagonally across both sides *(FIGURE 9.1.4).*

Start in the center of each side of the plate and work toward each corner.

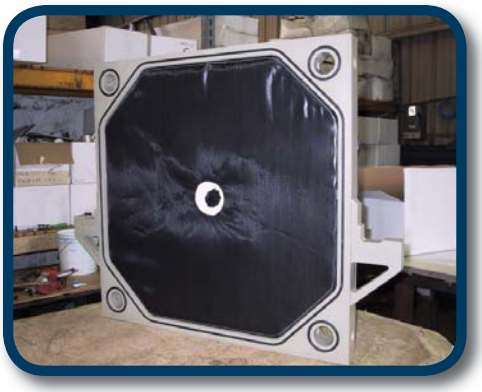

FIGURE 9.1.4

For non-gasketed cloths installation, ensure that the filter plate and filter cloth are clean and free of any debris. On intermediate cloths, fold one side of cloth and insert through center hole. Slide all large grommets on upper edge of one side of cloth over cloth dogs (pegs) at the top of the plate.Repeat for other side of the cloth. Use tie wraps through smaller grommets on sides of cloth to secure cloth to the plates.

9.0 MAINTENANCE & SERVICE

9.2 - Filter plate seals (gasketed only)

On the head plate, first remove the cloth while the plate is still bolted to the head section. Once the perimeter of the cloth is removed, the center section can be unbolted. Unbolt all four bolts along with the retainer ring. To install the new cloth, first hold the rope up to the groove. Make sure the center hole and all four retainer bolts line up. Proceed in pounding the top horizontal rope into the groove. Next, do each side, the bottom and finally the diagonals, making sure the center hole still lines up.
Bolt size holes must be made in the cloth to be able to bolt up the retainer ring. Do not puncture the cloths with any object. The cloth may rip or fray. You will need a sharp tool such as a screw driver or nail that can be heated up and has a handle to be able to hold it. The very end of the instrument must be heated/with a torch or lighter. Make very small holes in the cloth that will match up with the four bolt inserts *(FIGURE 9.2.1).*

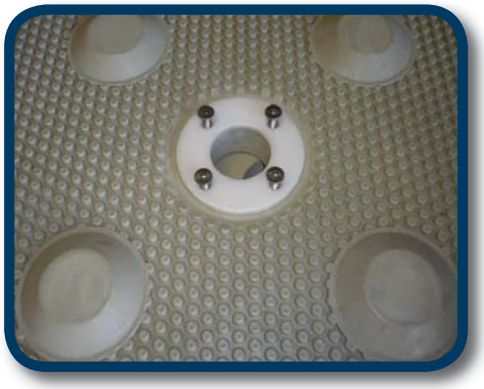

FIGURE 9.2.1

Then pre-fit the bolt in the hole to make sure the hole is large enough. Now the retainer ring can be reinstalled. Tighten the bolts opposite each other to put even pressure on all sides. Be careful not to over tighten or cross thread these bolts.

The O-ring seal is retained in a dove tail groove around the perimeter of the filter cloth and corner discharge ports. This O-ring is installed so that .060” to .075” of the edge is protruding out of the groove which provides the seal. The O-ring seal comes in a precut shape. When installing the O-ring, insert the end of the material at the bottom center of the filter plate and push it into the groove using a rolling tool. Do not stretch the material to make it fit more easily. This could create a leak later on.

9.3 - Filter cloth washing

The cloths that are in your press have been selected to optimize the use of the filter press in your application. It is important that the cloths remain clean. If the cloths become plugged or fouled the filter press cycle will prematurely end, which may cause a wet center or a cake with a high percentage of moisture. Inspect the cloths very closely for plugging. A plugged cloth will have solids deposited in between the weave of the cloth. Another indication of plugged cloths is a high pressure required for the cycle starting point.

There are several methods by which the cloth can be cleaned. The first is by removing the plates from the filter press and using a high pressure power washer to wash the cloths in place *(FIGURE 9.3.1).* Once the cloths have been cleaned put the plates back in the press. Next, recirculate water through the press to remove any solids that may have migrated to the back side of the press cloths. Do not exceed 1300 PSI as the cloths may become damaged.

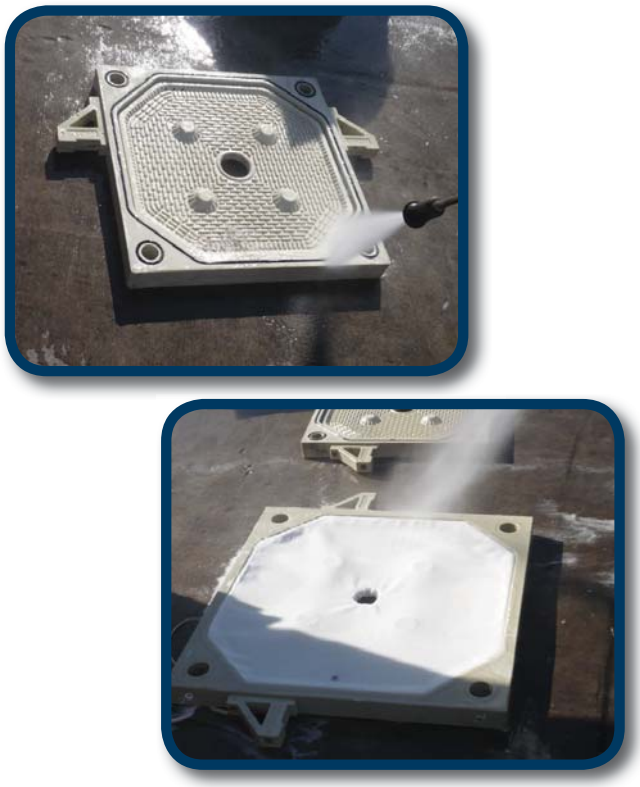

FIGURE 9.3.1 - Power washing

9.0 MAINTENANCE & SERVICE

A second method of cleaning the cloths is either by having them commercially laundered and/or by acid washing them (see below). In order to launder the cloths they must first be removed. Follow the instructions under section 9.1 (filter cloth maintenance). Select a company that can handle the material present in the filter cloth. Laundering with heat, detergents and tumbling helps to free up oils and solids that may have become trapped in the cloth weave and in the fibers. If the cloth is put through a commercial dryer with temperatures in excess of 170 degrees the cloths may shrink.

9.4 - Acid washing

Acid washing is done with the cloths in place. A separate tank is typically used for acid washing. You may want to hook the suction and return lines up on a temporary basis with flexible hose or you may want to permanently install the tank and piping. A precoat or body feed tank can double as an acid washing tank. The lines must allow you to draw suction from the tank through the pump and to the press. Recirculation is done through the press with the discharge line from the press returning to the acid washing tank. The tank used must have a minimum of one and one half times the volume of the filter press in gallons. (A 10 cubic foot press holds 75 gallons. The tank size should be 110 - 115 gallons.)

After making sure all cloths are clean. Close the press and fill the tank at least half full. Open all lines to and from the press going to the acid wash tank. Start pumping the water from the acid washing tank to the press. Close the two bottom valves on the discharge side of the filter press. The filter chambers will then remain full while the acid solution is recirculating. Add more water to the tank if necessary. Next, add the acid in concentrations of 5% to 25%. Use more acid if the solubility level of the solid is higher. A commercial grade hydrochloric (muriatic) acid may be used. Pour one half of the volume directly into the tank and in 15 minutes add the remaining amount of acid in the tank. Continue circulation for a minimum of one to two more hours. Once the acid has finished circulating in the filter press, it is now time to neutralize it and pump it to a treatment system. Once the tank is pumped out, fill the tank back up 100% with water and continue to recirculate the system for 15 minutes. The objective is to dilute any acid still left in the system and to rinse away any solids that become loose.

9.5 - Maintenance of components

1-The hydraulic pressure lines are to be inspected periodically for line leaks around the cylinder. If leaks are found, the lines must be tightened or replaced.

2-The level in the hydraulic reservoir must be maintained to provide trouble-free service. Locations and fill levels are listed below. Use AW ISO 32.

3-The air filter/regulator has an automatic drain but must be checked for clogging on a periodic basis. If there are any lubricators present, the fluid level must be checked and filled whenever necessary. Use misting-type oil rated 50-200 SSU (ISO Grade 7 to 46) at 100°F (38°C).

4-Sliding of the filter plates is assisted by applying a thin coating of grease to the top of the side rails.

5-Periodically check compressed air lines for leaks.

9.6 - Hydraulic oil

1-Pneumatic Hydraulics – the fill port is located on the top edge of the hydraulic pack. Fill the reservoir full to within 1/2 inch of the top of this port.

9.0 MAINTENANCE & SERVICE

2-Electric Hydraulics- the fill port is located on the top edge of the hydraulic pack .(FIGURE 9.6.1) Fill the reservoir full to the black line gauge on the side of the pack below the fill port.

FIGURE 9.6.1

3-The hydraulic rod should be cleaned periodically to remove any dirt particles.

9.7 - Expanding your filter press

There are two methods by which a press can be expanded:

(1) If your press came with a spacer, the spacer can be removed and the appropriate number of plates added.

FIGURE 9.7.1

(2) Replace the existing side rails with longer side rails. Each additional set of plates increases the capacity of the filter press. Specific expansion details can be found out by contacting PPC.

To expand a filter press with automatic closure, the follower must be removed. First take off the cylinder boot cover. There are two hose clamps that must be unscrewed and removed to pull the boot off. Taking off the boot will allow access to the cylinder coupler, which is to be unbolted from the follower.

Once the follower is free from the cylinder it must be lifted out. Remove the bolt plugs *(FIGURE 9 .7.2)* located on the top of the follower and replace them with eyebolts. Use a crane, hoist or forklift to remove the follower. Manually remove the tail plate and all intermediate plates completely. The side rails can now be removed.

FIGURE 9.7.2

FIGURE 9.7.3 Example of 800 mm with side rail off

9.0 MAINTENANCE & SERVICE

It is recommended that a forklift be used under the side rails to support the weight the bolt plugs. Unscrew the bottom bolts that hold one side rail on. Remove all remaining bolts and lower the side rail onto forklift forks. Repeat rail removal procedure for the opposite side. Once the side rails are clear of the filter press, one or both ends of the press may be moved apart to allow for the added length of new side rails.

Caution: Care must be taken as the head and tail sections are not as stable without the side rails.

Once the length of the press is adjusted, the new side rails may be installed. If the press is a premium 630mm or 800mm size the side rail may be placed in the second position if desired. Use a forklift to aid in supporting the rails while they are being installed. Reinstall all bolts and cover plates that hold the rails in place. Install a new stainless steel rail cover. Once all bolts are tightened the follower may be set in place. Now put all of the new and old filter plates into position along with the follower. Although capacity has expanded, method of operation is the same as previously described in Section 5.0.

10.0 CORE BLOWDOWN (optional)

Core blowdown is an optional feature that is used to remove non-filtered fluid from the center of all of the filter plates. This is used so that the excess fluid does not drip into the sludge holding container or onto the cake collection bin. This would wet the already dry filter cake. There are two main components of this option and they can be installed at a later date if desired. The first portion is a tee that must be installed directly in the inlet of the filter press *(FIGURE 10.0.1)*. One leg of the tee is closed by a valve and is piped back to a process tank. The vertical line off the tee has a valve coming off it which is fed by the process pump.

FIGURE 10.0.1 - Example on the 1200 Series

The second component of a core blowdown system is the core blowdown follower plate *(FIGURE 10.0.2)*. This is a tail plate that has an air line connection on the top of it. The air flow is channeled through this plate and down to the center feed line of the filter plate stack *(FIGURE 10.0.3)*. This air is forced in the reverse direction of the fluid flow. When the core blowdown valve is opened, the fluid is blown back to a location where the line is plumbed, this is usually the process tank or a drain *(FIGURE 10.0.4).*

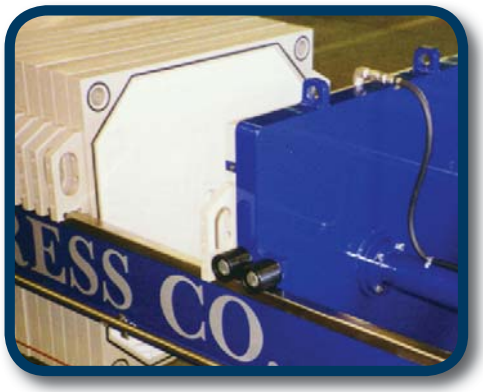

FIGURE 10.0.2

FIGURE 10.0.3

FIGURE 10.0.4 Coreblow with dual end feed

If this press comes with an optional core blowdown it is to be operated prior to the air blowdown cycle. A regulated compressed air line source must be hooked up to the core blowdown tail plate. The valve on this line is to be opened once the press cycle has been completed. This relieves the built-up pressure in the press. Be careful as pressurized liquid may discharge rapidly. The airline on the core blowdown tail plate is then opened up to 100 psi maximum. This cycle is only run for 5-10 minutes to remove any fluid left in the center of the plates.

11.0 PRECOAT & BODY FEED SYSTEMS (optional)

The use of precoat and body feed will enhance filtration of any product and waste. A precoat creates a thin layer of filter aid on the cloth which prevents blinding of the filter cloths inside the plate chamber. This process is performed prior to any dirty liquid being pumped into the filter press. A filter aid such as diatomaceous earth, cellulose, perlite or fly ash is mixed with water or clean product and pumped into the filter press. Once deposited on the filter cloth the filter aid acts as the filter instead of the filter cloth.

A body feed is a mixture of filter aid and the product or waste which is being filtered. The body feed allows continual filtration of difficult to filter materials.

The use of filter aid has many benefits including: Preventing the blinding of filter cloths, additional micron retention, increased flow rates, shorter cycle times and drier cakes.

11.1 - Precoat

To precoat, the press must be equipped with a precoat-style air blowdown. This allows each of the discharge ports to be isolated. All standard Pacific presses come with this feature. A tank *(Figure 11.1.1)* will be used to recirculate the precoat material. This tank must be clean and a minimum of 1.25-1.50 times the volume of the filter press. On the smaller filter presses the process pump can be used to precoat. On the larger filter presses a larger, separate pump must be used to maintain a constant flow rate of 0.3 gpm per square foot of surface area. This can be achieved by using either a diaphragm or centrifugal pump.

FIGURE 11.1.1

For example, 10-20 lbs. of Diatomaceous Earth per 100 sq. ft. of surface area is required. This gives a 1/16-inch thick layer of D.E. on the surface of the cloth.

To complete a precoat cycle, recirculate water or clean product from the isolated precoat tank to the filter press. The lower two discharge valves should be closed off to restrict flow going through the filter cloth. This will force the majority of the precoat material towards the top discharge valves giving a more even precoat. Add a predetermined amount of filter aid to the precoat tank, mixing it in as it is added. The discharge from the press will be clear. Continue to recirculate from the press until the whole tank is clear. Usually this takes 10-15 minutes.

Next, switch from the precoat tank to being on line with the process or waste stream. If a body feed is to be used it will be brought on-line now. Simultaneously switch the valves between the two sources being careful not to allow the flow or pressure to be interrupted. If the flow or pressure is interrupted the precoat cake may slide off the filter cloth. The two bottom air blowdown valves are to remain closed even after the precoat cycle is complete. Continue to keep the two bottom valves closed even during the process or body feed cycle. The bottom valves are to remain closed 1/4 to 1/3 of the time into the process cycle. At this point, open the valves until the process cycle is complete.

When switching back from a load prior to precoating, the entire feed line must be purged of solids (also called clean out). If a precoat cycle is necessary, clean the process line after the cleaning cycle is complete. Prior to closing the press with all of the plates toward the tail section, the feed line must be purged. Clean water must be put in the precoat tank. With the plates out of the way, the center feed line is to remain open. When the process pump is started, a minimum of 20-30 psi must now be opened, clean water will pump through the line and spray into the sludge cart or container used to catch the discharging fluid. Pump this line clean until the water coming out is clear. Shut the pump off and close the press.

A cleaner method of purging the presses inlet line is to install an auxiliary line on the inlet of the press. This auxiliary line can be piped back to the process tank.

11.2 - Body feed

The body feed is used to continually allow a percentage of filter aid to be added to the process or waste stream. This can be accomplished two ways.

11.0 PRECOAT & BODY FEED SYSTEMS (optional)

The first is a batch basis—add the filter aid in proportion to fluid to be filtered in a large body feed tank. The body feed tank has a mixer attached to it to continually suspend the filter aid. The tank is pumped at the flow rate of the filter press pump. Once the tank is close to empty another batch is mixed up. This process continues until all fluid is filtered.

The second method is much more continuous—a large concentration of filter aid is added to water or filtered product. A ratio of 1/2 - 1 pound of filter aid to 1 gallon of water or product is mixed up. A mixer keeps the filter aid suspended. A metering pump injects the filter aid mixture directly into the filter press feed line. The ratio of process flow is adjusted to keep the mixture constant. The advantage of metering is that it is continuous. The disadvantage is that it is not as accurate as the batch process method.

12.0 CONVEYORS (optional)

Conveyors with belts, drag chains and screws are available as options for material handling equipment. Conveyors are mounted directly under the filter press for ease of solids movement. A chute may be used to direct solids into the conveyor. Air or electric motors are used to drive conveyors. The conveyor comes with an electrical motor. It will require a motor starter and possibly a fused disconnect; follow all local and federal electrical codes when sizing and installing the starter equipment. The motor may also be air operated. This motor only requires an air regulator/lubricator and a compressed air source. The speed may be variably adjusted to accommodate load conditions, if it was purchased with this option.

The belt conveyor is typically mounted on legs which are to be bolted down. The drag conveyor is enclosed in a drain pan which has the ability to hold water. This unit can be attached to the bottom of the filter press or to a platform. Both of these units require periodic inspection and maintenance. The bearings on both must be kept clean and lubricated at all times. The belt of the conveyor must be adjusted periodically. This is done by adjusting the angle of each side of the conveyor increasing the space on one slide moves the conveyor toward the opposite direction. The belt must be changed on an as-needed basis. The drag conveyor has plastic slats that can break or wear down depending on frequency of use. The plastic paddles are meant to wear and may be replaced by unbolting them from the metal support. The chain should also be inspected. The links may stretch or clog up with solids; clean with a degreaser and lubricate with a silicone-based grease. The links in the chain may be repaired or replaced if they are damaged.

FIGURE 12.0.2 - Screw Conveyor

FIGURE 12.0.3 - Belt Conveyor

FIGURE 12.0.1 - Drag Conveyor

13.0 STANDARD TERMS & CONDITIONS

The following terms and conditions shall apply to all merchandise and equipment described in the quotations, invoice, lease proposal, rental agreement, purchase order acknowledgment, or other document to which this instrument is attached or in which reference is made to the Pacific Press Co. "Standard terms and conditions."

All references herein to "Seller" shall mean Pacific Press Company. The term "buyer" shall include the end user and the lessee or renter of the equipment during the term of the lease or rental, regardless of whether any purchase option is exercised.

It is the obligation of the Distributor/Representative, OEM or agent to inform the end user of these terms and conditions by submitting a copy to each purchaser of a filter press prior to receipt of the purchase order acknowledgment. This product warranty is the only warranty that is provided by Pacific Press Co. Any verbal agreements made by our representatives or distributors will not apply unless they are in writing and signed by an officer of the corporation.

TITLE: Title to the product(s) and risk of loss or damage shall pass to the Buyer upon leaving the factory floor whether through pick up or common carrier. When equipment is sold, rented or leased on an "installed" basis, risk of loss or damage to the equipment shall pass to Buyer upon completion of installation by Seller. Each shipment shall stand as a separate sale and is subject to credit arrangements or to receipt of cash. If payment is not made in accordance with terms, or if at any time in Seller's judgement Buyer's credit standing has been impaired, Seller may withhold shipment of any material called for hereunder, until satisfactory cash or credit arrangements have been established.

DEFAULT OR CANCELLATION: Seller shall not be liable for delays occasioned by fire, strike, labor controversy, inability to obtain labor, materials or components from usual sources of supply, governmental order or any other circumstances beyond the reasonable control of the Seller; provided however, that if any material called for here under is to be manufactured especially for Buyer, and manufacturer is suspended or terminated for any reason, Buyer agrees to allow Pacific Press Co. to immediately and without notice, take possession of the collateral in such a manner as is commercially reasonable. With respect to any accounts or contracts debtors to pay amounts due directly to Pacific Press Co. to be applied to the amounts due to Pacific Press Co. The Buyer shall be liable to Pacific Press Co. for expenses incurred to take possession of collateral, to dispose of same, and any action necessary to protect Pacific Press Co. interest in such collateral including any action in any bankruptcy proceedings. The term "expenses" shall include reasonable attorney fees and reasonable costs of litigation. If Buyer requests cancellation of any order Pacific Press Co. shall be entitled to recover from Buyer, in addition to the purchase price of any order already shipped or delivered, all costs and expenses incurred buy Pacific Press Co. in connection with buyers order, in addition any anticipated profit on the cancelled or uncompleted portion of the buyers order. In addition if any deposits have been placed upon equipment or designs they will be immediately forfeited for payment of occurred costs.

LIMITED WARRANTY: All equipment or parts produced by Pacific Press Co. are covered or warranted against material or workmanship defects for a period of ninety (90) days from the date of shipment, under normal use. The exception to this is filter cloths which do not carry any warranty. All components not manufactured by Pacific Press Co. carry the original manufacturer's warranty. If fault develops, notify us. At our option, if accounts are paid we will supply you with either servicing data or shipping instruction and a returned good authorization. Such products will be inspected by us and if determined defective due to material or workmanship shall be put into proper operating condition, free of charge except labor and transportation. In the case of components purchased by Pacific Press Co. and incorporated in the equipment, Pacific Press Co. warranty is limited to the component manufacturer's guarantee. Any failure to notify us of unsatisfactory operation, improper or unauthorized installation, modification or corrective work done to the equipment shall cancel any liability thereunder for claims, labor loss of profit, goodwill repairs or other expenses incidental to replacement. If any Pacific Press Co. is hooked up to a compressed air source that does not have an air dryer (instrument gradeair), then the above warranty is immediately void. The warranty expressed above is our only warranty. Any verbal agreements by our representatives or agents will not apply unless reduced into writing and approved by an officer of the Seller.

SIZING AND CLOTHS: Pacific Press Co. shall not be bound by any implied warranties of merchantability or fitness for a particular purpose arising under the uniform commercial code of any state or otherwise implied by law, all of which are expressly excluded. Pacific Press Co. provides information, recommendations and suggestions based on tests and data believed to be reliable. However Pacific Press Co. may make recommendations for sizing based on data provided by the user. Any recommendations are only intended to be used as a guide. Pacific Press in no form shape or manor guarantees, warranties nor takes any responsibility for the sizing of filter presses nor the choice of filter cloths. It is the Buyer's responsibility to determine the suitability of our products for each application. If a situation arises where data supplied by Pacific Press Co. is results in a improper sized press or improper type of cloths are selected the only remedy the buyer has is a discount on additional purchases. This however does not change the obligation for full payment on the part of the Buyer. Pacific Press Co. cloths are supplied with each filter press. Filter press warranty is void if cloths from another manufacturer are used in the press.

Seller's obligations and buyers remedies for breach of warranty shall be limited to those herein before set forth, no suit against Seller for breach of warranty may be commenced by buyer against Seller after 90 days following delivery of the equipment to the carrier or the installation of the equipment on Buyer's premises. Nothing contained herein shall be deemed to expand the Seller's obligation or the Buyer's remedies for breach of warranty beyond the provisions set forth.

Buyer shall use and operate the equipment in a careful manner and only in accordance with the written operating instructions (operations manual) furnished by Seller. Buyer shall only use the filter press for the application listed in the application questionnaire. If there are any changes in the fluid being processed or in the application the seller must notify Pacific Press Co. in writing. Seller shall have no liability to the Buyer for breach of warranty or otherwise if Buyer's remedies for breach of warranty other than the provisions set forth.

PRICES: All prices are F.O.B. Pacific Press Co. factory and firm for acceptance within thirty (30) days from the date of any quotation. Prices and rentals charged by Seller to Buyer shall be exclusive of any applicable sales, use and excise taxes and any duties or other charges imposed by any government authority upon the manufacture, sale, transportation, export or import, of the goods sold hereunder shall be paid by Buyer, or if required to be paid by Seller shall be reimbursed to Seller by Purchaser, and any increase after acceptance of order will be added to Seller's price. All Distributors/representatives and OEM's are subjected to the payment terms and imposed pricing schedules in their respective agreements with Pacific Press Co. All orders are subject to acceptance by Pacific Press Co.

PAYMENT POLICY: All payments shall be in U.S. Dollars and partial payments shall become due as shipments are made. If shipment is delayed by Buyer the date of readiness for shipment shall be deemed to be the date of shipment for payment purposes. All invoices will be dated on this date of readiness to be paid according to the terms agreed upon in the acknowledgment. Once manufacturing is complete, if the shipment is delayed for more than or not paid for (according to terms) within 7 (seven) calendar days Pacific Press Co. reserves the right to sell the equipment to another party. At this point the

13.0 STANDARD TERMS & CONDITIONS

Buyer's order will be reentered into the system and be subject to the same original delivery time. The order remains non-cancelable and at this point and there will be no refunds of deposits. If the equipment is not sold to another party and remains at Pacific Press Co. a minimum of a $ 25.00 per calendar day charge for storage will apply.

Pacific Press Co. deems all delivery times to be valid only after receipt of deposit and signed acknowledgment documents. Any payments that are specified as C.O.D or "cash prior to shipment" will not ship until full payments are received. If payments are not made according to the terms, there will be a 1.5 % per month fee charged until all balances are paid in full. All financial accounts must be settled prior to Pacific Press Co. providing additional parts or service.

LIMITS OF LIABILITY: Under no circumstances shall Pacific Press Co. be liability for incidental or consequential damages arising from failure to fulfill terms, or delivery of order, any liability for defects in equipment or from negligence. Pacific Press Co. shall not be liable for any special, indirect, incidental or consequential damages including, but not limited to loss of profits or revenue, loss of the use of the equipment or any associated equipment.

APPROVAL OF DRAWINGS: All orders will have drawings that are sent to the buyer for approval after the order is placed, the drawings must be returned marked "Approval as Noted" within five (5) working days after receipt unless otherwise noted. If the drawings have not been received back in five days, nor has there been any verbal notification of change Buyer shall forfeit any right to change.

CLASSIFIED INFORMATION: Buyer agrees that all data sent by the factory is classified, including brochures, binders, blueprints, drawings, and price lists, they must not under any circumstances be reproduced or given to any third party without written consent from Pacific Press Co. Buyer also agrees to return all such material to Pacific Press Co. if a quotation or proposal is not accepted. Pacific Press Co. shall have a royalty-free license to make, use, and sell any changes or improvements in the product(s) invented or suggested by Buyer or its employees.

TRANSPORTATION & SHIPMENT: Filter presses must be transported on an open bed trailer and a dedicated trailer is also often required. All other parts will be packaged at Sellers discretion. Pacific Press Co. will make every effort to ship all equipment on time and on the scheduled date given by our sales people, however delivery dates are deemed to be approximate times, due to the fact that many of the components used in this equipment are received by vendors that are beyond the control of Seller. Pacific Press Co. assumes no responsibility for lateness, loss of, or damage to the equipment after pick up by carrier, who shall be deemed to be acting for the Buyer and the equipment shall thereafter be transported at the Buyer's risk. Seller is not liable for any freight charges required, or deemed required by transportation company. All shipments are to be shipped freight collect, Seller assumes no liability for any transportation costs or damages that may occur during transit.

All claims for shipments containing defective material or shortages must be made by contacting the factory in writing within five (5) days from receipt of material otherwise they will not be recognized.

DAMAGES: Pacific Press Co. liability for damages under this contract shall in no case exceed the purchase price of the equipment claimed to be defective or to have caused damage. Equipment shall not be returned to Seller without Seller's written permission and prior written notification of problem and a chance for Seller to remedy the problem.
INSTALLATION: Unless otherwise stated in writing, the equipment shall be assembled, installed and erected by and at the expense of the Buyer. Pacific Press Co. only provides the list of equipment mentioned in the acknowledgment. The purchase and installation of any prefilters, dryers, regulators, lubricators or auxiliary equipment is the responsibility of the Buyer.

GOVERNING LAWS AND REGULATIONS:

ENVIRONMENTAL
Pacific Press Co. makes no representation or warranty regarding and may not be held liable for the failure of its equipment to perform in compliance with any federal, state, or local environmental laws or regulations regarding the treatment, disposal or transformation of the product(s), by products, material and/or waste that the equipment is used to treat. These laws and regulations include but are not limited to:

National Environmental Policy Act of 1969
Solid Wastes Disposal Act
Clean Air Act (Federal and State)
Comprehensive Environmental Response, Compensation and Liability Act of 1980
Federal Land Policy and Management Act of 1978
Federal Water Pollution Prevention and Control Act
Transportation Safety Act of 1974

Any and all conflicts are to be settled out of court through arbitration in Orange County California pursuant to the Commercial Arbitration Rules of the American Arbitration Association then in effect except as herein provided. California Law shall apply both substantively and procedurally. Any award made in such arbitration may be confirmed and entered as a judgement by California court and thereafter enforced by any court of competent jurisdiction. Dispute arising out of these Terms and Conditions are to be resolved by arbitration and not by court action unless both parties agree in writing to the contrary. In the event that both parties agree to waive arbitration and pursue resolution in a court action, the sole judical forum for resolution of disputes arising out of these Term and Conditions is to be in an Orange County, California courts.

STATE AND LOCAL COMPLIANCE: Pacific Press Co. will be held liable only for those OSHA standards which are in affect as of this date and to the extent they are applicable to the performance by Pacific Press Co. of its obligation under this contract. If it is found that any Pacific Press Co. products does not comply with any OSHA or Local, State or County codes Pacific Press Co. liability shall be limited to the cost of modifying the product(s) or replacing the noncomplying product(s) after receipt of a written notice within 30 days of receipt of notification of the noncompliance, less transportation.

Buyer, at their own expense, agrees to indemnify, defend and save Pacific Press Co. and its officers, directors, employees and agents thereunder, harmless from and against any and all damages, demands penalties, suits, causes of actions and claims whatsoever brought by any governmental body, or any third person arising our of Buyer's failure to comply with packaging or other specifications and requirements mandated by and federal, state or local environmental products that the equipment laws or regulation regarding the treatment, disposal or transportation of the products that the equipment is used to treat specifically including, but not limited to, the Transportation Safety Act of 1974 (and any rules and regulations issued thereunder).

14.0 GLOSSARY

Air Blowdown
The piping manifold at the head of the press which allows for compressed air to be forced into the filter chambers to further dry the filter cake.

Blank Plate
This is a solid plate that is used as a support plate behind the follower plate. It is always used when the follower plate is being moved forward in the plate stack.

Filter Cloth
The filter media used for retaining the particulate of slurry.

Filter Plate
The plastic plate hung in the vertical position. These have recessed cavities on both sides, so that when placed together they create a filter chamber.

Filtrate
Any liquid that has passed through the filter media.

Follower
The steel plate that the hydraulic cylinder pushes against to close the filter press.

Tail Plate
The filter plate that the follower pushes against. This plate is movable, and can be placed any position in the stack of filter plates to reduce the volume of the filter press.

Head
The end of the press where the fluid lines enter.

Head Plate
The filter plate that is attached to the steel head section of the filter press. The inlet and discharge piping thread directly into this plate.

Intermediate Plate
All of the filter plates that have recessed chambers on both sides.

Ram
The hydraulic cylinder.

Side Rails
The two flat bars which hold the head and tail ends of the press together.

Slurry
Any liquid containing suspended solids.

Suspended Solids
Solids that do not dissolve in liquid; those solids that remain suspended which can be removed by mechanical filtration.

Tail
The end of the press that holds the hydraulic controls.

Thermal shock
This is an abrupt change in temperature of the filter plate caused by an outside source, usually feed slurry, wash water or liquid or in the case of a membrane plate, squeeze water or air.

PACIFIC PRESS COMPANY

2418 Cypress Way • Fullerton, CA 92831
714.525.0630 • 800.878.8029 • fax.714.525.2664
www.pacpress.com

UNLOADING FILTER PRESS INSTRUCTION MANUAL

Photo # 132456

140006I-Unloading Filter Press Instruction Manual.indd 1 10/7/2010 8:57:43 AM

1.0 TABLE OF CONTENTS

1.0 Table of contents 2

2.0 Introduction 3

3.0 Safe operation 4

4.0 Transportation 5

5.0 Off loading method selection 9

6.0 Fork lift requirements 12

7.0 Fork lift off loading preparation 14

8.0 Fork lift lifting procedure 16

9.0 Post lifting preparation 18

10.0 Rigging with a crane 19

10.1 Spreader beams 21
10.2 Spreader bars 23
10.3 Eyebolt and Hoist rings 24
a) Eyebolts 24
b) Hoist rings 26
10.4 Shackles and Chain slings 27
a) Shackles 27
b) Chain slings 28
10.5 Center of gravity 29

10.0 Loading plates 30

Note: **These instructions are intended for use by qualified personnel for instruction and maintenance purposes. Reproduction in whole or in part in not permitted without the express written permission of Pacific Press Company.**

140006I-Unloading Filter Press Instruction Manual.indd 2 10/7/2010 8:57:48 AM

2.0 INTRODUCTION

The Pac Press that you purchased is among the most technically advanced filter presses in the world. For over 25 years, this press has been designed to be easy to use and to be dependable and reliable for years to come.

This manual is intended to introduce and to familiarize you with your new filter press. The instructional portion is intended to provide you with general information on unloading your filter press.

Before attempting to off load your press, please read this manual carefully. This will insure that your new press is off loaded in a safe and efficient manner. If you have any questions regarding the safe off loading of the press, please contact Pacific Press Co. (PPC) immediately at 1.800.878.2029.

Upon receiving your filter press, please inspect it and all components for any visible damage. If any visible damage has occurred notify the trucking company immediately as you will have to make a claim with them. It is best to make a notation on the freight bill of any damage, point out the damage to the truck driver and have the truck driver sign a notation as to the damages.

140006I-Unloading Filter Press Instruction Manual.indd 3 10/7/2010 8:57:49 AM

3.0 SAFE OPERATION

Be sure to read and understand the safety notice statements in this manual. For your safety do not install, operate or attempt maintenance procedures until you understand the warning and caution statements. A warning statement indicates a possible unsafe condition that can cause personal harm. A caution statement indicates a condition that can cause damage to the equipment.

1- Warning : Loading and unloading : Only qualified personnel are to lift the machinery.
2- Warning : Never place any part of your body beneath a suspended load.
3- Warning : Never ride on a suspended load even if you are trying to balance it.
4- Warning : Never leave the suspended load unattended.
5- Warning : Always wear hard hat when making overhead lifts.
6- Warning : All rigging hardware must be certified for the capacity of the filter press.

1- Caution : Do not attempt to lift the press under the filter plates.
2- Caution : Never attempt to lift the press by attaching to the follower.
3- Caution : The lifting lugs, eyebolt holes or hoist rings are the only points designed to lift the filter press from.
4- Caution : Never lift over the rated capacity of the equipment.
5- Caution : Do not operate with damaged, twisted chains or straps.

Note : The only recommended method of lifting the press is with a crane or forklift.

Disclaimer : Pacific Press Co. has intended the contents of this manual only as a guide. PPC in no way takes on liability for rigging or lifting of any customers filter press. It is up to each individual customer to determine the suitability of this information.

140006I-Unloading Filter Press Instruction Manual.indd 4 10/7/2010 8:57:49 AM

4.0 TRANSPORTATION

Filter presses shipped domestically in North America are securely strapped and tarped to an open flatbed tractor trailer. Filter presses are a piece of machinery that must be side loaded on the bed of the truck. They therefore cannot be loaded into an enclosed van. (Figure 4.0.1)

Photo # 132396

FIGURE 4.0.1

Photo # 132399

FIGURE 4.0.2 - Press before tarping (wrapped with protective foam)

Photo # 132397

FIGURE 4.0.3- Press fully tarped

140006I-Unloading Filter Press Instruction Manual.indd 5 10/7/2010 8:57:49 AM

4.0 TRANSPORTATION

As a standard practice Pacific Press Co. will arrange the transportation of your filter press. If you prefer to arrange your own trucking company they may be used, but they must be made aware of the following :

1-No enclosed vans are accepted. Only open flatbed trucks can be used.
2-Chaining the legs or base of the filter press to the truck bed is recommended. (Trucker must supply carpet or rubber as to not scratch paint.) (Figure 4.0.4)
3- Strapping filter press to the truck bed is also recommended. The location is to be at the head and siderails of the press.
4 -Presses are typically wrapped with protective foam and shrink wrap but must be covered with a tarp.

FIGURE 4.0.4- Chaining the base of the filter press by using carpet and chains

140006I-Unloading Filter Press Instruction Manual.indd 6 10/7/2010 8:57:51 AM

4.0 TRANSPORTATION

International shipments can be crated and containerized .

Photo # 132401

FIGURE 4.0.5 - 470 mm filter press being prepared to crate base

470 mm small presses

Photo # 132402

Photo # 132403

Photo # 132405

800 mm medium size presses

Photo # 132404

140006I-Unloading Filter Press Instruction Manual.indd 7 10/7/2010 8:57:52 AM

4.0 TRANSPORTATION

Photo # 132409

1200 mm and 1500 mm large size presses

Photo # 132406

Sidebar style presses

Photo # 132240

Style overhead press

Photo # 132407

Photo # 132057

140006I-Unloading Filter Press Instruction Manual.indd 8 10/7/2010 8:57:56 AM

5.0 OFF-LOADING METHOD SELECTION

5.1 Prior to the arrival of your filter press it will be necessary to determine what method will be used to offload it. The options are :

5.1.1 - Forklift (shipments 800 mm and smaller or less than 20,000 lbs (9071.66 kilos)). If you have selected this method then proceed to sections 6.0 - 8.0.
5.1.2 - Overhead crane-either facility or contracted mobile crane (most shipments over 20,000 lbs (9071.66 kilos)) . If you have selected this method then proceed to section 10.0.

The first objective is to determine what is feasible and most cost effective for your operation. Off-loading by forklift requires a local utility supply (compressed air or electricity depending on the model) to open the press and lift the press from the side rails. If you do not have a utility supply, an overhead crane must be used in which the press is off-loaded in the closed position. (See section 10.0)

5.2 Forklift off-loading requirements:

The first requirement for filter press off-load is the availability of the required utility supply of either compressed air or electricity.

5.2.1 Does the filter press have pneumatic hydraulics ?

Photo # 132553

Figure 5.2.1 - Pneumatic hydraulic pack

Photo # 132415

Figure 5.2.2 -Compressed air connection

140006I-Unloading Filter Press Instruction Manual.indd 9 10/7/2010 8:58:03 AM

5.0 OFF-LOADING METHOD SELECTION

5.2.2 Does the filter press have electric hydraulics ?

Photo # 132197

Figure 5.2.3 - Electric hydraulic pack

Photo # 132210

Figure 5.2.4 -Electrical connection on the side of the panel control

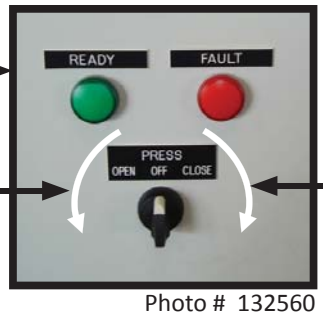

Photo # 132560

If you do not have access to the matched utility the press must be lifted by crane.

5.3 If I can supply the required utility supply to my press are there any other requirements?

You must have a forklift capable of:

- Lifting the required capacity.
- Meeting the required forklift “reach” or fork length.

5.4 How do I determine if the forklift can lift the filter press?

You will need to determine the appropriate weight of your filter press by locating it on the drawing chart. (Quick reference is on next page) A copy of the drawing chart is located in the drawing section of your manual.

140006I-Unloading Filter Press Instruction Manual.indd 10 10/7/2010 8:58:06 AM

5.0 OFF-LOADING METHOD SELECTION

Refer to your order documentation and drawing to verify utility information. If in doubt contact the PPC at 1.800.878.8029.

For actual air consumtion or electrical voltage requirements refer to the filter press general arrangement drawing in the drawing section. If there is a question, please contact PPC.

Please note that the forklift must be capable of lifting the weight of the filter press at the height that is referenced on the forklift length chart on the following page.(Chart 6.0.1)

If the forklift does not meet this requirement then an overhead crane must be used.

140006I-Unloading Filter Press Instruction Manual.indd 11 10/7/2010 8:58:10 AM

6.0 FORK LIFT REQUIREMENTS

Forklift reach requirement

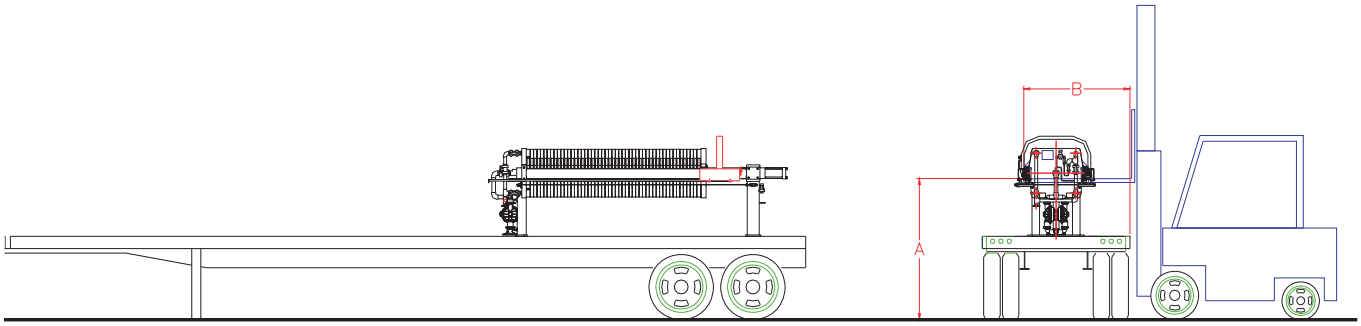

The following chart will provide the proper fork length required for each size filter press. The requirements are based on a 102-inch deck. For 96-inch decks deduct 3-inches (CHART 6.0.1).

A : lift height
B : fork lenght or “reach” (for a standard 102” truck or a 96” truck deck)

Filter Press Size	A Lift H	B Min. Reach	Weight (lbs)*
470	94.0	66.0	1,784
630	97.0	70.0	3,623
800	99.0	72.0	8,801
1000	102.0	78.0	14,433
1200	104.0	82.0	30,850

CHART 6.0.1 - Filter off-loading requirements.
Measurements are based on a 102 inch deck.
* Appropriate weight of filter press, refer to the individual drawing for more detailed information

Notes: Refer to the drawing section of the Pacific Press manuals for accurate filter press weight (locate drawing chart by press size).

140006I-Unloading Filter Press Instruction Manual.indd 12 10/7/2010 8:58:10 AM

6.0 FORK LIFT REQUIREMENTS

The standard forks on forklifts are normally not able to reach to the dimensions shown in column B (Chart 6.0.1, page 12). Therefore forklift extensions may be required. Forklift extensions slide over standard forklift forks and enable the reaching capability be extended.

Photo # 132601

Forklift extensions

FIGURE 6.0.2- Forklift extensions

Note : Make sure forklift is capable of offloading capacity required at height shown on chart 6.0.1.

7.0 FORK LIFT OFF LOADING PREPARATION

7.1 Removal of tarp and packing

To lift the filter press off the flatbed truck it is necessary to:

Remove the tarp from the filter press.

The truck operator should have a tarp covering the filter press and have it secured in place on the truck with chains or straps (FIGURE 7.1.1).

Allow the truck operator to take responsibility for untarping the filter andremoving all securing chains and/or strap material. Please note any apparent damage to the filter press on the lading bill and contact PPC immediately.

Photo # 132411

FIGURE 7.1.1 - Filter press will be secured by the truck operator

7.2 Removal of safety cord

Once the tarp and chains straps are removed the press will need further preparation prior to lifting.

The safety cable may obstruct lifting of the press by the side rails.Please unbolt the tension side of the cable that is attached to the safety cable bracket (FIGURES 7.2.1, 7.2.2).

Photo # 132412

FIGURE 7.2.1 - The safety cable adjustment bracket is located on the non-operational side of the tail end of the filter press.

Photo # 132413

FIGURE 7.2.2 - To remove the safety cable, un-thread (counter clockwise) the bolt on the end of the tension eyebolt.

140006I-Unloading Filter Press Instruction Manual.indd 14 10/7/2010 8:58:12 AM

7.0 FORK LIFT OFF-LOADING PREPARATION

Next, remove the safety cable or cord so that it is not in the way of the forks. (FIGURE 7.2.3)

Photo # 132414

FIGURE 7.2.3- Once the safety cable is out of the way, the side of the press is accessible.

140006I-Unloading Filter Press Instruction Manual.indd 15 10/7/2010 8:58:17 AM

8.0 FORK LIFT LIFTING PROCEDURE

Once the filter press is open and the ram fully retracted, the lifting process can begin.

First, you will have to determine the approximate end to end center of gravity in order to properly lift the press. This may require multiple lifts to determine exactly how many filter plates must be moved or removed in either direction.

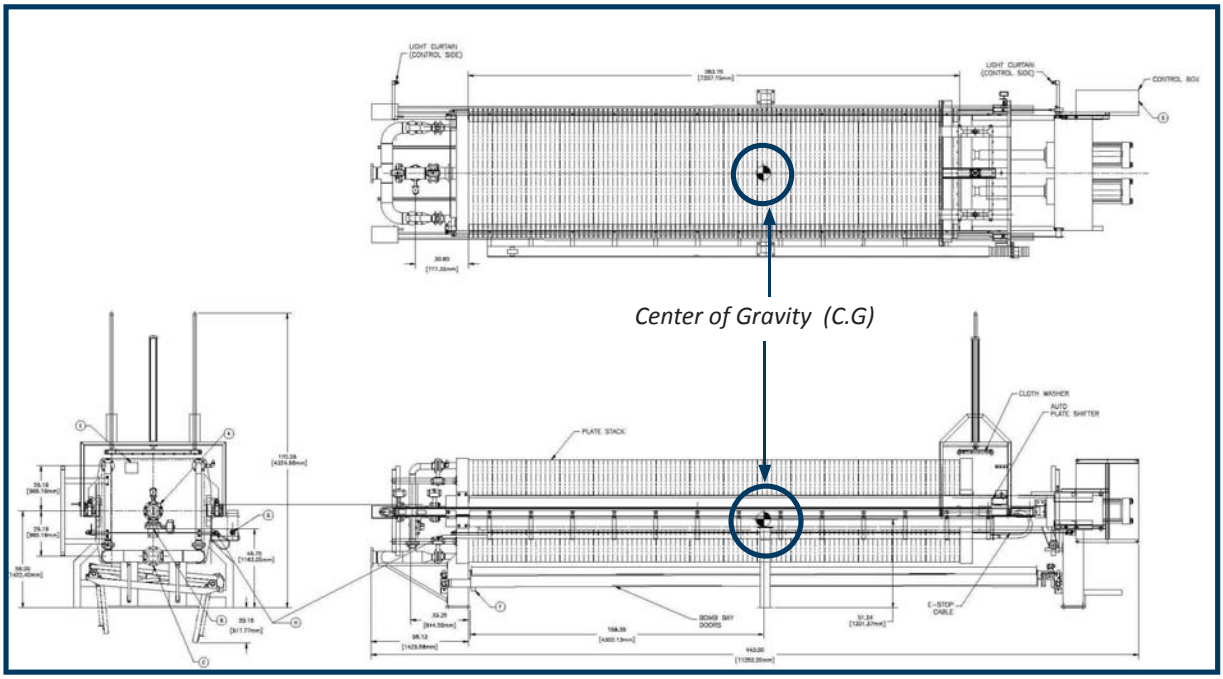

Photo # 132419

FIGURE 8.0.1- Center of gravity shown

Begin by spreading apart the filter plates to allow space for the forks to lift (FIGURE 8.0.2).

Photo # 132417

FIGURE 8.0.2- Spread the filter plates in two locations so that the forks will have access to the rail.

Remove some filter plates if necessary.

140006I-Unloading Filter Press Instruction Manual.indd 16 10/7/2010 8:58:18 AM

8.0 FORK LIFT LIFTING PROCEDURE

Note: it may require more than one test lift to position the forks for the appropriate center of gravity point. Before contacting the forks with the bottom of the rails use a cloth or cardboard to ensure that the forks will not scratch the rails. (FIGURE 8.0.3)

Photo # 132420

FIGURE 8.0.3

Lift the filter press by the rails. The forks should extend several inches beyond the rails to ensure contact should the press slide or shift. Lift the filter press straight up to clear the truck (FIGURE 8.0.4).

Photo # 132421

FIGURE 8.0.4 - Correct lifting of the press

140006I-Unloading Filter Press Instruction Manual.indd 17 10/7/2010 8:58:20 AM

8.0 FORKLIFT LIFTING PROCEDURE

There are two ways to remove the filter press from the truck:
1.- Either the forklift can lift the press, then back up and set down the filter press.
2- Or the forklift can lift the press then the truck driver can move the truck forward to make space for the press to be set down. (FIGURE 8.0.5 & 8.0.6).

Photo # 132423

FIGURE 8.0.5 - The forklift must be able to lift the press high enough to clear the truck.

Photo # 132422

FIGURE 8.0.6 - With the truck moved forward, the press can be driven by forklift to the desired location.

140006I-Unloading Filter Press Instruction Manual.indd 18 10/7/2010 8:58:21 AM

9.0 POST LIFTING PREPARATION

Once the press is off loaded, re-install the safety cable and adjust (9.0.1).

Photo # 132413

FIGURE 9.0.1- Place the eyebolt through the hole in the bracket and tighten the bolt hand tight.

Quick stop cable adjustment : The next step will require two people. The tension of the cable will have to be tightened by one person while the other person monitors the result of the adjustment (FIGURES 9.0.2 - 9.0.4).

Photo # 132424

FIGURE 9.0.2 - Cable control panel

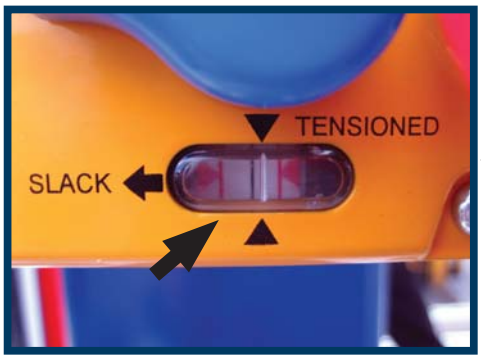

Photo # 132426

FIGURE 9.0.3 - The cable tension is shown adjusted improperly. The black line is to the left.

With the safety cable in place the filter press is ready for installation.

Photo # 132425

FIGURE 9.0.4 - The cable tension is shown adjusted properly. The black line is in the center.

140006I-Unloading Filter Press Instruction Manual.indd 19 10/7/2010 8:58:23 AM

10.0 RIGGING WITH A CRANE

There are two types of overhead cranes that maybe used to lift the filter press of the truck bed.
1- Bridge cranes are typically mounted to buildings.
2- Mobile cranes, typically third party contracted, these cranes come complete with certified riggers.

Due to the rectangular size and a typically long overall length of the filter press, a method is required for picking up the weight from four points on the press and securing that to a single “pick point”. A spreader beam or a spreader bar must be used and provided by trained, experienced machinery moving personnel or certified crane operator.

The advantage of lifting the filter press with a crane instead of a forklift is that it is not necessary to open the filter press in order to off load it.

Note : Filter presses up to 100 cu.ft. are typically shipped with filter plates inside the filter press. Filter presses 1500 mm or larger than 100 cu.ft. the filter plates are shipped separate from the frame.

BRIDGE CRANE

Photo # 132427

FIGURE 10.0.1 - Rigging a filter press with a bridge crane.

MOBILE CRANE

Photo # 132278

FIGURE 10.0.2 -Rigging a filter press with a mobile crane.

140006I-Unloading Filter Press Instruction Manual.indd 20 10/7/2010 8:58:28 AM

10.0 RIGGING WITH A CRANE

10.1 Spreader beams

The spreader beam is not supplied with filter press. The customer has the responsibility to relay the provided information to the equipment rigger or mover. The customer also has the responsibility that apply to lifting the equipment This equipment must only be performed by qualified or properly trained personnel.

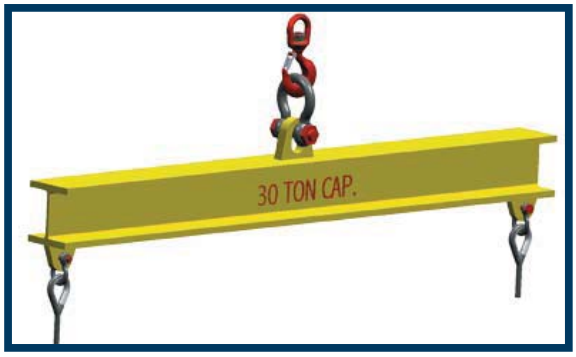

Photo # 132428

FIGURE 10.1.1-Image of a spreader beam

Photo # 132427

FIGURE 10.1.2 - Rigging a filter press with a bridge crane.

A spreader beam is usually designed to carry the full load of the item that it is lifting. The purpose of a spreader beam is to spread the load out from a single center point to two or more points further away. Spreader beams are typically certified for a specific maximum weight capacity. The reason that a spreader beam or bar is necessary is that it allows the ends of the filter press to be lifted straight up and not at an angle which could damage the frame.

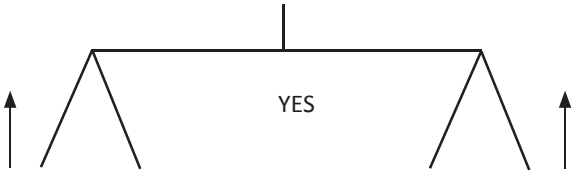

FIGURE 10.1.3 - Correct rigging with a spreader beam

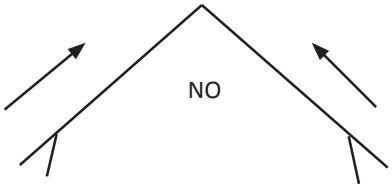

FIGURE 10.1.4 -Incorrect rigging with no spreader beam

140006I-Unloading Filter Press Instruction Manual.indd 21 10/7/2010 8:58:32 AM

10.0 RIGGING WITH A CRANE

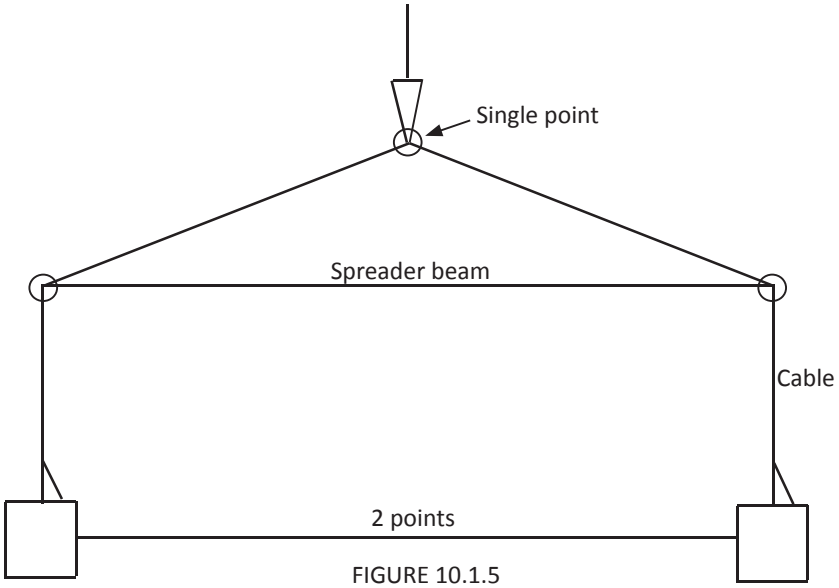

FIGURE 10.1.5

Photo # 132430

Photo # 132431

FIGURES 10.1.6 & 10.1.7 -Spreader beams with mobile cranes

140006I-Unloading Filter Press Instruction Manual.indd 22 10/7/2010 8:58:33 AM

10.0 RIGGING WITH A CRANE

Photo # 132439

FIGURE 10.1.8 -Spreader beam parallel to the filter press

Photo # 132440

FIGURE 10.1.9 - The lifting chain is bolted to the spreader beam by a shackle

10.2 Spreader bars

Photo # 132432

FIGURE 10.2.1-Image of a spreader bar

The spreader bar is <u>not supplied with filter press</u>. The spreader bar is similar to a spreader beam except it is not rated to lift the full load. The function of the spreader bar is to spread one or more cables apart to make the load lift straight up and down. The size of the spreader bar must be similar to the length of the filter press.

140006I-Unloading Filter Press Instruction Manual.indd 23 10/7/2010 8:58:37 AM

10.0 RIGGING WITH A CRANE

10.3 Eyebolts and Hoist rings

Eyebolts and hoist rings perform similar function. Each provides a connection point for chains and hook riggins. They are removable and therefore can be used for other equipment lifting. Eyebolt are less expensive and are usually rated for light loads. Eyebolts also do not swivel or rotate like hoist rings.

a) Eyebolts

Eyebolts (they are not supplied with filter press) will be required to be threaded in to four locations on the filter press. Refer to the following chart of press size for appropriate diameter and thread sizes of eyebolts (Chart 10.3.1). Use only fixed or swivel style eyebolts. (Figure 10.3.3)

Press Size	Capacity	Dry Weight	# of Tapped Holes	Tap Size On Head	McMaster Carr Eyebolt P/N	Load Limit of Eyebolt
470	5 ft3	1,784	4	1/2 - 13 UNC	3014T491	2,400
630	12 ft3	3,623	4	3/4 - 10 UNC	3014T531	5,000
800	30 ft3	8,801	4	3/4 - 10 UNC	3014T531	5,000
1000	60 ft3	14,433	4	1 - 8 UNC	3014T55	9,000

CHART 10.3.1- Press size to eyebolt sizing chart.

The four locations for the eyebolts on the filter press are shown (FIGURE 10.3.2).

Photo # 132435

FIGURE 10.3.2 - The filter press is supported at four points, two for the head and two for the tail.

Photo # 132434

FIGURE 10.3.3- Image of a standard threaded eyebolt.

140006I-Unloading Filter Press Instruction Manual.indd 24 10/7/2010 8:58:39 AM

10.0 RIGGING WITH A CRANE

If the eyebolts are too long for the amount of thread, they may be secured by the addition of a nut (FIGURES 10.3.4-10.3.6).

Photo # 132437

FIGURE 10.3.4 - Eyebolt with correct thread length.

Photo # 132436

FIGURE 10.3.5 - Incorrect threading of eyebolt. The eyebolt thread length is too long. Do not lift with this configuration

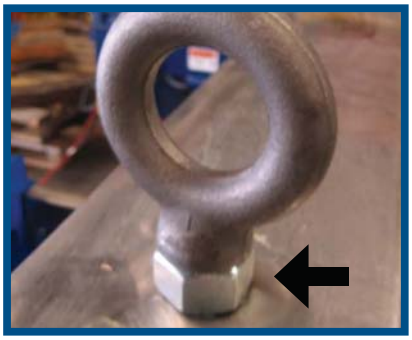

Photo # 132438

FIGURE 10.3.6 - Correct threading of eyebolt. Exposed thread can be secured with the addition of a nut as long as there is proper thread engagement

140006I-Unloading Filter Press Instruction Manual.indd 25 10/7/2010 8:58:42 AM

10.0 RIGGING WITH A CRANE

b) Hoist rings

Most hoist rings of 1” diameter typically have a maximum capacity of 10,000 lbs (4535.83kg) per ring for a maximum of 40,000 lbs for 4 rings. With this limitation it is typically not suitable to lift or rig large filter presses with the filter plates in the frame. The press frame is usually lifted and shipped on a separate truck than the filter plates. Once the frame is properly rigged in place and the “plumb” dimensions verified by a qualified company or individual the filtes plates can be loaded.

Hoist rings (not supplied with filter press) may be required for larger load on all fours corners or incombination with lifting tabs and shackles. Refer to the following chart of press sizes for appropriate diameter and thread sizes of hoist rings. (CHART 10.3.7)

Never exceed the rated load capacity. Swivel hoist rings can swivel 360 ° and pivot 180 ° so they can lift at any angle.

Press Size	Volume maximum (ft3)	# of Tapped Holes	Thread size	Load Limit of Eyebolt
1200	100 ft3	4	1”- 8	10,000
1500	300 ft3	4	1”- 8	10,000

CHART 10.3.7- Press size to hoist rings sizing chart.

Photo # 132442

FIGURE 10.3.8- Image of hoist rings

140006I-Unloading Filter Press Instruction Manual.indd 26 10/7/2010 8:58:43 AM

10.0 RIGGING WITH A CRANE

10.4 Shackles and Chains slings

a) Shackles

Shackles are not supplied with filter press. Shackles are typical rigging hardware that usually used to make a connection between the method of lifting- such as straps, cables or chains and the filter press lifting tabs or hoist rings.

FIGURE 10.4.1- Image of a shackle

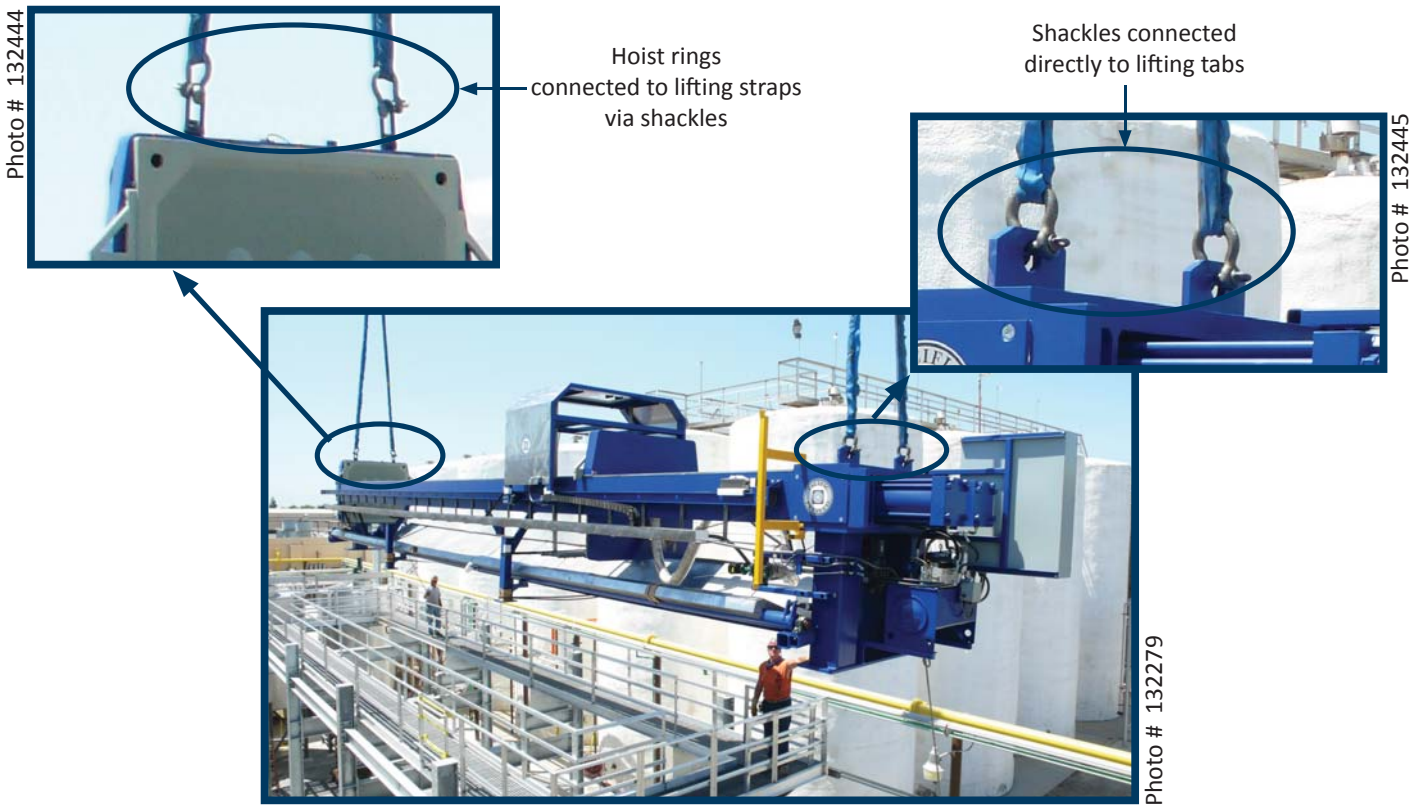

FIGURE 10.4.2-Rigging with hoist rings and shackles

140006I-Unloading Filter Press Instruction Manual.indd 27 10/7/2010 8:58:43 AM

10.0 RIGGING WITH A CRANE

b) Chain slings

Chain slings are typical rigging equipment used to attach the lifting cables or eyehooks to a piece of equipment. They can be either preassembled and certified as an assembly or rated individually and assembled per individual lift. Chain slings are not supplied with filter press.

FIGURE 10.4.3-Image of chain slings

140006I-Unloading Filter Press Instruction Manual.indd 28 10/7/2010 8:58:45 AM

10.0 RIGGING WITH A CRANE

10.5 Center of Gravity

It is very important to know the center of gravity (C.G.) of the load to be lifted. If the lift or pick point is not exactly centered, it will affect the tension in each sling and, if the sling chains are of equal length, the load will tilt when lifted. The center of gravity of an object is that point at which the object will balance. The entire weight may be considered to be concentrated at this point. To make a level or stable lift, the cable must be directly above this point. It may require more than one trial lift to find the appropriate balance point. Refer to the Pac Press drawings to locate the center of gravity of the filter presses. (FIGURE 10.5.1) If you do not have a center of gravity drawing you may request one free of charge.

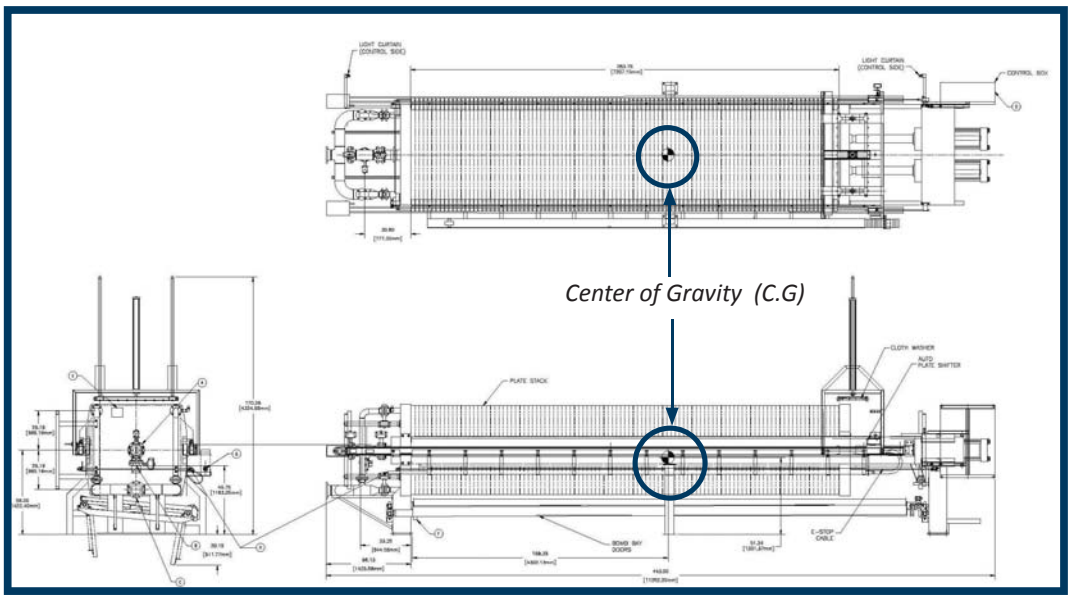

Photo # 132419

FIGURE 10.5.1-Center of Gravity

140006I-Unloading Filter Press Instruction Manual.indd 29 10/7/2010 8:58:46 AM

11.0 LOADING PLATES

For larger sized 1200 mm and 1500 mm filter presses, the plates are removed from the press before shipping. After receiving and installing the filter press, the filter plates must be loading into the filter press.

Before loading the filter plates into the filter press, make sure to grease the rail cap to ensure smooth travel and reduce wear strong fiction between the rail cap and the plates. (Figures 11.0.1-11.0.3)

Photo # 132478

Figure 11.0.1 - Greasing rail cap

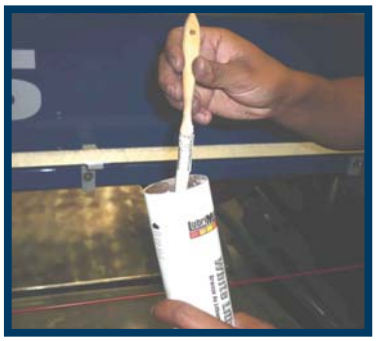

Photo # 132479

Figure 11.0.2

Photo # 132480

Figure 11.0.3

The loading of the filter plates must be assisted by mechanical means as the filter plates are very heavy. For demonstration purposes, the use of a overhead (construction style) style forklift is shown using a spreader beam to load the filter plates. The beam is a field fabricated item and by incorporating two lifting straps becomes functional as a lifting beam.

Photo # 132446

FIGURE 11.0.4- Filter press with out filter plates

Photo # 132447

FIGURE 11.0.5-Lifting beam attached to forks with lifting straps to carry load

140006I-Unloading Filter Press Instruction Manual.indd 30 10/7/2010 8:58:47 AM

11.0 LOADING PLATES

Photo # 132607-1

FIGURE 11.0.6- Ropes around the handles of the filter plates

Photo # 132449

FIGURE 11.0.7

Lift the plates then put it on the filter press. Repeat the operation until the press is full.

Picture # 132450

FIGURE 11.0.5

Picture # 132452

FIGURE 11.0.6

140006I-Unloading Filter Press Instruction Manual.indd 31 10/7/2010 8:58:49 AM

11.0 LOADING PLATES

Picture # 132451

FIGURE 11.0.7

Note : Be sure to set the filter plates :
1- With the identification buttons on the non operational side (or left)
2- The identification buttons are to alternate one, three, one, three, the proper sequence is referenced by the fixed head or tail plate.

140006I-Unloading Filter Press Instruction Manual.indd 32 10/7/2010 8:58:53 AM

PacPRESS
PACIFIC PRESS COMPANY

2418 Cypress Way • Fullerton, CA 92831
714.525.0630 • 800.878.8029 • fax.714.525.2664
www.pacpress.com

SEMI AUTOMATIC PLATE SHIFTER MANUAL

Photo # 132103

Photo # 132294

140014B-Semi automatic plate shifter manual.indd 1 10/7/2010 9:04:40 AM

1.0 TABLE OF CONTENTS

1.0 Table of Contents 2

2.0 Receiving 3

3.0 Introduction 4

4.0 Safe operation 5

5.0 Operation 6

6.0 Maintenance and Troubleshooting 12

6.1 Semi automatic plate shifter exploded parts 12
6.2 Plate shifter maintenance 14
6.3 Troubleshooting 15
a. Procedure 6.3.1 Alignment of shifter in relation to shifter frame 15
b. Procedure 6.3.2 Side to side alignment shifter push plate arms 17
c. Procedure 6.3.3 How to align the plate shifter rail 21

Note: **These instructions are intended for use by qualified personnel for instruction and maintenance purposes. Reproduction in whole or in part in not permitted without the express written permission of Pacific Press Company.**

140014B-Semi automatic plate shifter manual.indd 2 10/7/2010 9:04:44 AM

2.0 RECEIVING

Each plate shifter is carefully adjusted and tested in the factory prior to shipping.

When you receive your plate shifter, you should:

1- Observe the condition and report any damage immediately to the carrier that delivered the equipment.

2- If the equipment will not be put in service immediately it must be stored in a clean, dry and warm location.

3- Remove any shipping strapping from the plate shifter.

4-Before operation, ensure plate shifter has unobstructed movement along entire length of the press.

5- The plate shifter operates from a regulated compressed air supply so no seperate utility hookup is required.

6- Before starting the operation:
a. Run the shifter carriage from one end of the press to the other, inspecting the shifter support railing you want to make sure it was not damaged in transit.
b. Check alignment of semi-automatic by positioning the plate shifter engagement plates below the head plate handle and looking at both sides of press.

If any visible damage has occurred notify the trucking company immediately as you will have to make a claim with them. It is best to make a notation on the freight bill of any damage, point out the damage to the truck driver and have the truck driver sign a notation as to the damages.

140014B-Semi automatic plate shifter manual.indd 3 10/7/2010 9:04:44 AM

3.0 INTRODUCTION

Congratulations on selecting a semi automatic plate shifter. The use of this shifter will provide quicker discharge cycle times and reduced operator fatigue.

The semi automatic plate shifter is available as an option on sizes 630 mm thru 1500 mm. The main frame of the semi automatic plate shifter is constructed of carbon steel or stainless steel. This unit is premounted to the filter press. The operation of this shifter is supplied by a flexible airline that is included. The air is fed by a branch of the main compressed air supply line. The design encourages the operator's hands to be on the unit and away from the filter plates before the shifter is operated. The plate shifter is standardly operated from the right side of the filter press (defined while facing the tail of the press).

Before attempting to install or operate your press, please read this manual carefully. This manual contains general procedures that apply to semi automatic plate shifters. If you have any questions regarding the safe operation of this accessory, please contact Pacific Press Co. (PPC) immediately at 1.800.878.2029.

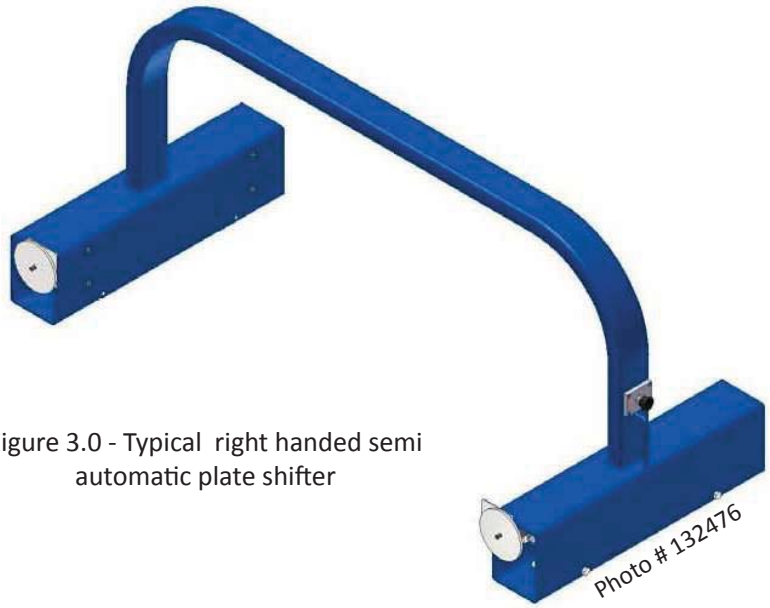

Figure 3.0 - Typical right handed semi automatic plate shifter

140014B-Semi automatic plate shifter manual.indd 4 10/7/2010 9:04:44 AM

4.0 SAFE OPERATION

Be sure to read and understand the safety notice statements in this manual. For your safety do not install, operate or attempt maintenance procedures until you understand the warning and caution statements. A warning statement indicates a possible unsafe condition that can cause personnel harm. A caution statement indicates a condition that can cause damage to the equipment.

1- Warning : Do not bypass or disable safety devices or guards. They are designed to prevent damage to personnel or equipment. These devices can only provide protection if they remain in place and operative.
2- Warning : The operation of the plate shifter inherently has moving parts and pinch points, do not rest hands on any part of the equipment while operating.
3- Warning : The plate shifter is operated by 100 psi air or gas, do not attempt maintenance without first removing the air supply.
4- Warning : Always wear eye protection when operating plate shifter. When separately the contents of the filter plates may splash the operator.

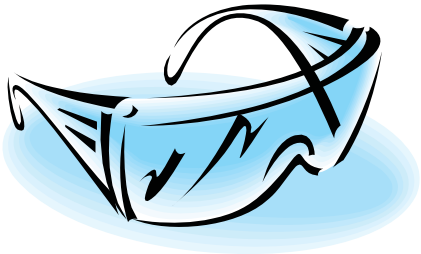

1- Caution : Do not shift more than three plates at any time.
2- Caution : Failure to clean solids fully from plate surfaces can severely damage plates.
3- Caution : Do not attempt to stand on or use the plate shifter as a lifting device.
4- Caution : Be sure to keep the shifter rails clean, lubricated and free from debris.
5- Caution : Do not use an air supply source above 125 psi.
6- Caution : The plate shifter has pinch points. The area of the cylinder that touches the filter plates is the contact point. Please do not put any part of your body near this location.
7- Caution : Do not use the plate shifter as a tray to carry filter plates.

140014B-Semi automatic plate shifter manual.indd 5 10/7/2010 9:04:44 AM

5.0 OPERATION

The plate shifter is stored at the head section of the filter press until it is ready to be used (Figure 5.1). Once the filter press is open and the steel follower is retracted, the plate shifter may be operated (Figure 5.2). The plate shifter is manually rolled into place.

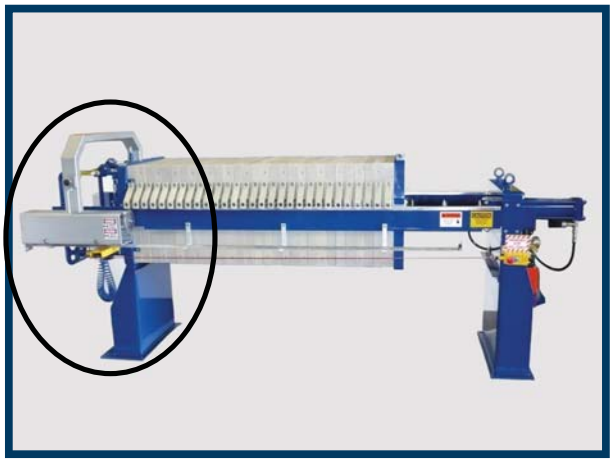

Photo # 132477

Figure 5.1- Semi plate shifter when not in use is stored at the head section of the filter press

Photo # 132534

Figure 5.2- Steel follower in retrated position

140014B-Semi automatic plate shifter manual.indd 6 10/7/2010 9:04:45 AM

5.0 OPERATION

To move the shifter, grasp the handle located on the control side of the press and pull the shifter along the tracking rails. Bring the plate shifter forward so that the two shifter “push plates” line up between the follower plate handle and the next filter plate handle.

Once the plate shifter is lined up and ready to be operated, hold the handle with the palm of your hand while pushing down the operation button with thumb or index finger (Figures 5.3 & 5.4).

Photo # 132299

Figure 5.3

Photo # 132299.1

Figure 5.4

After pushing the button with your finger, the round plates of the plate shifter will contact the handles of the filter plates (Figures 5.5 & 5.6). The plate shifter will now engage in a shifting cycle.

Photo # 132305

Figure 5.5

Photo # 132305.1

Figure 5.6

140014B-Semi automatic plate shifter manual.indd 7 10/7/2010 9:04:46 AM

5.0 OPERATION

Photo # 132308

Figure 5.7 - Pushing plate forward

Photo # 132312

Figure 5.8 - Moving forward

Photo # 132313

Figure 5.9 - All the way forward

Photo # 132320

Figure 5.10 - Retracting shifter arm

140014B-Semi automatic plate shifter manual.indd 8 10/7/2010 9:04:48 AM

5.0 OPERATION

Photo # 132325

Figure 5.11 - Retracting shifter arm

Photo # 132329

Figure 5.12 - Retracted shifter arm

The “push plates” operate by two cylinders, one that lifts the shifter arm into place (Figure 5.13) and the other to push the plate forward (Figures 5.14-5.17).

Photo # 132300.1

Figure 5.13 - Reposition shifter to next plate

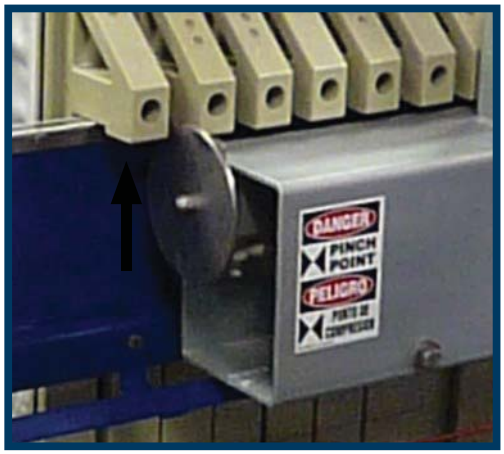

Photo # 132301.1

Figure 5.14 - Restart sequence again

140014B-Semi automatic plate shifter manual.indd 9 10/7/2010 9:04:52 AM

5.0 OPERATION

Once the plate is pushed forward, release the button (Figure 5.16), the first cylinder lowers the shifter arm and it is then retracted to start again.

Photo # 132316.1

Figures 5.15

Photo # 132317.1

Figures 5.16

140014B-Semi automatic plate shifter manual.indd 10 10/7/2010 9:04:54 AM

5.0 OPERATION

Discharging filter cake

Figure 5.17

The plate shifter operation allows individual access to the filter plates. Between shifting the filter plates each filter chamber must be emptied of the filter cake. The filter cake is typically discharged with a scraper paddle or spatula. Use the scraper paddle to discharge all of the filter cake from the plate chamber (Figure 5.17).

After the plates are completely discharged and shifted, the operator will have reached the head plate. Next return the plate shifter to the head storage position and close the press. The shifter is now ready to operate for the next cycle.

140014B-Semi automatic plate shifter manual.indd 11 10/7/2010 9:04:55 AM

6.0 MAINTENANCE AND TROUBLESHOOTING

6.1 Semi automatic plate shifter exploded parts

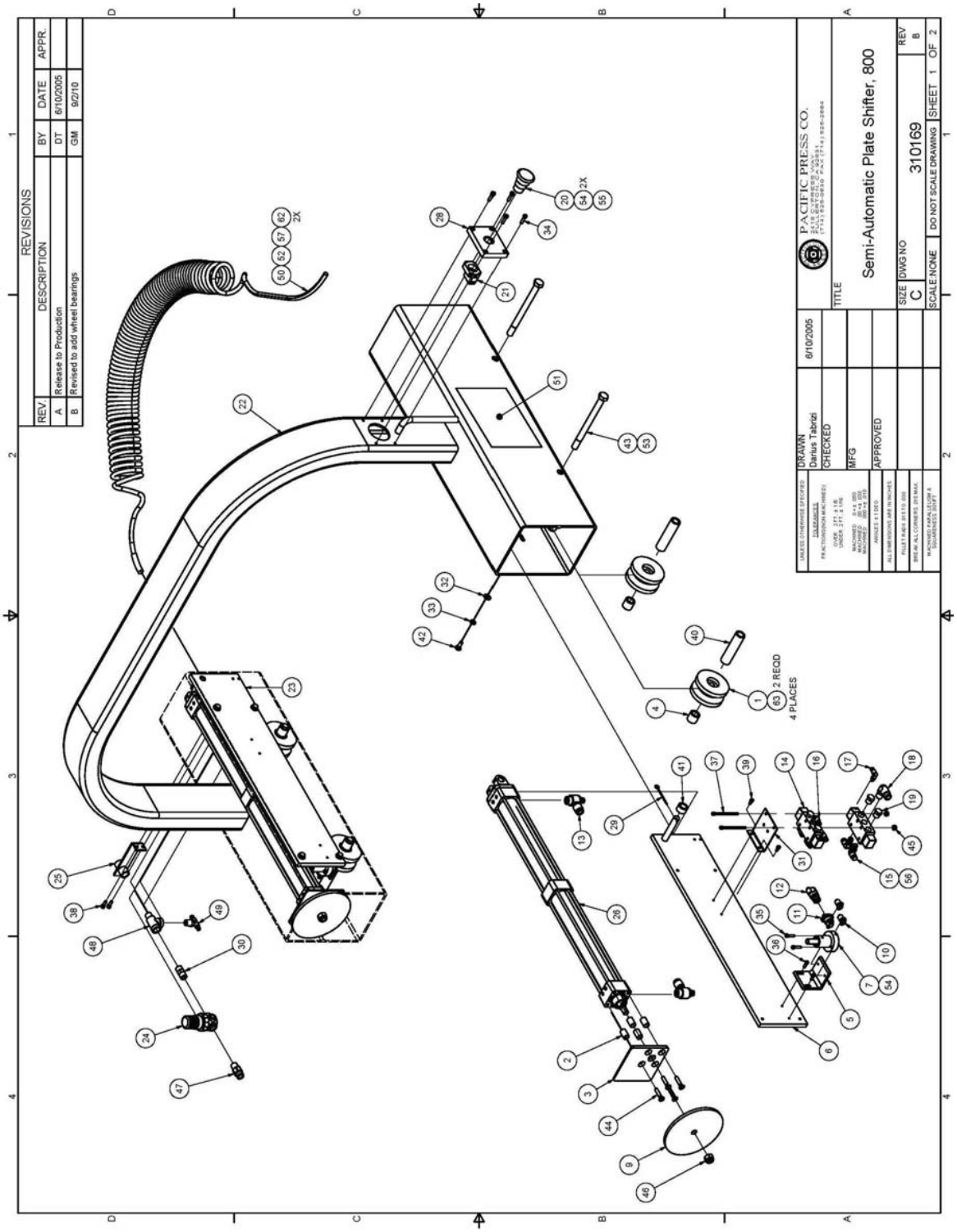

140014B-Semi automatic plate shifter manual.indd 12 10/7/2010 9:04:56 AM

6.0 MAINTENANCE AND TROUBLESHOOTING

ITEM	QTY	P/N	DESCRIPTION	SIZE	MATERIAL
1	4	321019	Wheel, V-Groove, UHMW, Black	3" OD x 1 1/2	UHMW, Black
2	8	321020-101	Round Mech Tube	.63 OD x .06 Wall x .75	304 SS
3	2	321021	Plate	1/4 x 4 x 4	304 SS
4	4	321038-101	Pipe	1/2 Sch 80 x 3/4	304 SS
5	2	321023	Angle	L2 x 2 x 3/16 x 2	Aluminum-6061
6	1	321016	Sub Plate Weldment, RH		
7	2	SS-075-1.00	Cylinder, Pancake		Default
9	2	321022	Sheet Metal	5 1/2" OD x 1/4	304 SS
10	4	PWR-E14457	Flow Control, Right Angle, Mini		Default
11	2	PWS-B1557	Treshold Sensor		Default
12	2	PWS-P111	Threshold Sensor TE		Default
13	4	NAS3201F-NO3-11	Flow Control		Default
14	4	V12R5D7A-X0090	Valve, Inline, Air Pilot Actuated		Default
15	4	6T-4MPX90	Elbow, Swivel		Default
16	6	1T-4MPX90	Elbow, Swivel		Default
17	4	1T-10/32X90	Swivel, Tube		Default
18	2	6T-4MP90	Elbow, Tube		Default
19	8	4B-BREATH	Breather		Default
20	1	ZB2-BC2	Button, Mushroom, Black		Default
21	1	PXB-B1011	Switch Assy		Default
22	1	321013	Frame Weldment, 800		
23	1	321017	Sub Plate Weldment, LH		
24	1	R07-200-RNKA	Mini Regulator		Default
25	1	321024	Bracket, Air Inlet Coupling		Welded Steel Mild
26	2	NCA1D150-2100	Cylinder, Clevis Ends, Pnue, 630/800		
28	1	321027	Flat Bar	1/2 x 2 1/2 x 3 1/4	Aluminum-6061
29	2	350079	Cotter Pin	3/32 x 1 3/4	Default
30	1	4B-HEX	Nipple, Hex	1/4" NPT	Brass
31	2	321037	Sheet Metal	16 ga x 2 1/2 x 3.275	304 SS
32	8	FW-S1/4	Washer	1/4	Default
33	8	SLW-S1/4	Split Lock Washer	1/4	304 SS
34	4	SHCS-S10F.75	Socket Head Cap Screw	10 - 32 x 3/4	Default
35	4	SHCS-S8F.75	Socket Head Cap Screw	8 - 32 x 3/4	Default
36	4	SHCS-S8F.50	Socket Head Cap Screw	8 - 32 x 1/2	Default
37	4	SHCS-S8F2.50	Socket Head Cap Screw	8 - 32 x 2 1/2	Default
38	2	SHCS-S10F.50	Socket Head Cap Screw	#10 - 32 x .50	18-8 SS
39	4	SHCS-S8F.38	Socket Head Cap Screw	8 - 32 x .38	Default
40	4	321038-111	Pipe	1/2 Sch 80	304 SS
41	2	321038-100	Pipe	1/2 Sch 80 x 3/4	304 SS
42	8	HCS-S1/4C.63	Hex Head Cap Screw	1/4 - 20 x 5/8	Default
43	4	HCS-S1/2C6.50	Hex Head Cap Screw	1/2 - 13 x 6 1/2	Default
44	8	SHFH-S1_4C1.25	Socket Head Countersink Screw	1/4 - 20 x 1 1/4	Default
45	4	NI-S8C	Nylock Nut	8-32 UNC	316SS
46	2	NI-S7/16C	Nylock Nut	7/16-14 UNC	316SS
47	1	450068	Pneumatic Fitting	3/8 Tube X 1/4 MP	Default
48	1	4FP-4MP-4FP	Tee	FP 1/4 x MP 1/4 x FP 1/4	Steel
49	1	450069	Pneumatic Fitting, Run Tee	T 5/32 X 1/4 MP X T 5/32	304 SS
50	1	350183	Air Hose, Retractable Poly, (PU-1425-B-B)		
51	1	QS3301	Decal, DANGER PINCH POINT		
52	1	4T-4MP	Tubel	1/4 X MP 1/4	
53	4	FW-S1/2	Washer, Flat	1/2'	SS
54	4	1T-Y	Parrallel "Y" Connector	5/32	
55	1	6T-1T	Tube	5/32 x T 3/8	
56	1	6T-6T-6T	Tee	T 3/8	
57	1	4BFP-BULK	Bulkhead Fitting	1/4"	Brass
58	1	1A-206-01	Tubing, Black (500' Reel)	3/8" X 15'	
59	1	1A-203-01	Tubing, Black (1000' Reel)	1/4" X 20'	
60	1	1B-156-01	Tubing, Black (1000' Reel)	5/32" X 10'	
61	1	1B-156-05	Tubing, Red (1000' Reel)	5/32" X 10'	
62	2	4BMP-4FP90	Elbow	MP 1/4 X FP 1/4	Brass
63	8	350219	Bearing, Ball, .500 Bore		

UNLESS OTHERWISE SPECIFIED

TOLERANCES
FRACTIONS(NON-MACHINED)
OVER 2 FT. ± 1/8
UNDER 2 FT. ± 1/16
MACHINED 0 ± .050
MACHINED .00 ± .030
MACHINED .000 ± .010

ANGLES ± 1 DEG

ALL DIMENSIONS ARE IN INCHES

FILLET RADII .015 TO .030

BREAK ALL CORNERS .015 MAX.

MACHINED PARALLELISM & SQUARENESS .001/FT

DRAWN Darius Tabrizi	6/10/2005	
CHECKED		
MFG		
APPROVED		

PACIFIC PRESS CO.
2418 CYPRESS WAY
FULLERTON, CA 92831
(714) 526-5630 FAX (714) 526-2664

TITLE
Semi-Automatic Plate Shifter, 800

SIZE	DWG NO	REV
B	310169	B

SCALE: DO NOT SCALE DRAWING SHEET 2 OF 2

6.0 MAINTENANCE AND TROUBLESHOOTING

6.2 Plate shifter maintenance

Perform maintenance on the plate shifter at the following intervals.

1- Every cycle
a. Check that the interior and exterior are clean and free from debris. The components are wash down grade and maybe cleaned directly with a low pressure water air source.
b. If the plate shifter will not operate, make sure the supply air is at least 90 psi and 10 cfm is available.

2- Weekly
a. Check all pneumatic connections and make sure they are tight and there are no leaks. Airline leaks waste energy and cost money.
b. Check tracking of filter plate parallel to plate stack, if not straight perform procedure 6.2.1.
c. Grease the rail cap to ensure smooth travel and reduce wear strong fiction between the rail cap and the plates. See figures I to III.

Greasing rail cap

Photo # 132478

I

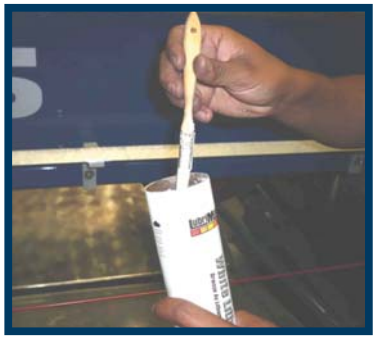

Photo # 132479

II

Photo # 132480

III

3- 90 days
a. Lubricate the plate shifter with 5 drops air tool lubricant by removing tubing from tubing fitting at end of coil hose and immediately cycling several times.
b. Check support rail mounting bolts and all other fasteners and make sure they are secure.
c. Visually inspect the alignment of the shifter rail, adjust as needed.

4- Never
a. Lubricate the wheel bearings. They are sealed and do not require lubrication.
b. Lubricate the plate shifter rail. The semi automatic plate shifter has wheels with bearings and therefore the plate shifter rail does not require lubrication.

140014B-Semi automatic plate shifter manual.indd 14 10/7/2010 9:04:58 AM

6.0 MAINTENANCE AND TROUBLESHOOTING

6.3 Troubleshooting

a. Procedure 6.3.1- Alignment of shifter plates in relation to shifter frame

Once the semi automatic plate shifter is on the filter press, inspect that the position of the round plate is the same in both sides. The round plate has to be aligned with the handles of the plates. (Figure 6.2) If the position of the round plates are not the same in both sides, you will need to adjust the position by moving the cylinder mounting plates in the shifter frame.

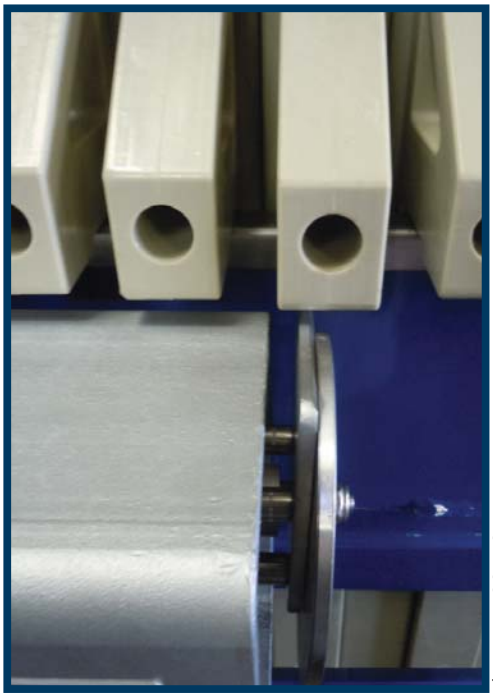

Photo # 132572

Figure 6.1- Wrong positon of the round plate before pushing the plate

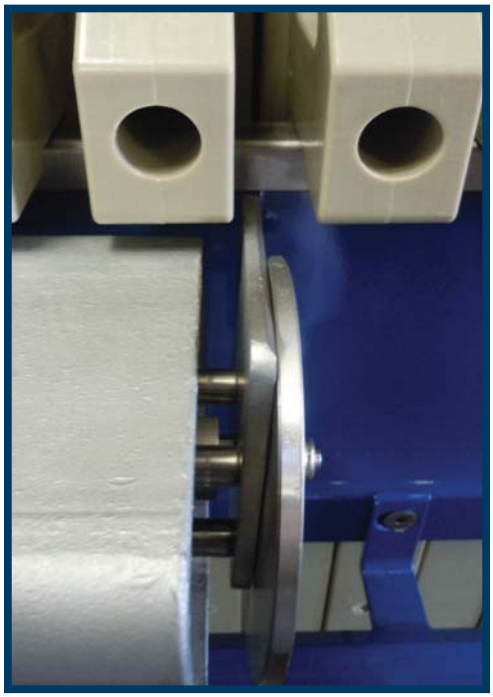

Photo # 132571

Figure 6.2- Correct positon of the round plate before pushing the plate

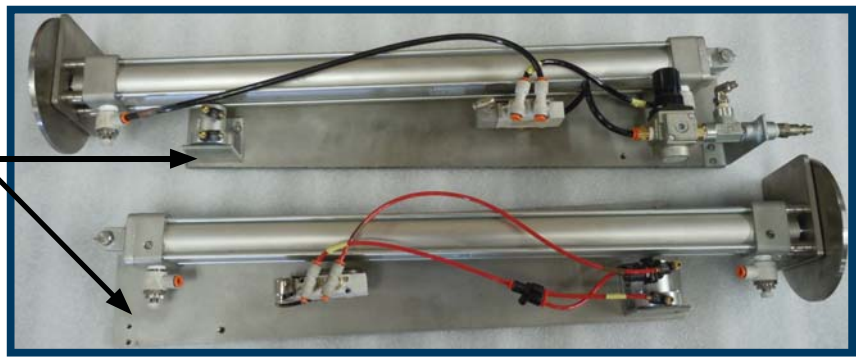

Photo # 132573

Figure 6.3

140014B-Semi automatic plate shifter manual.indd 15 10/7/2010 9:04:59 AM

6.0 MAINTENANCE AND TROUBLESHOOTING

Check that all bolts are in a right position, at the middle of the hole (Figure 6.5). The adjustement for the right postion is between 3/8” and 1/2”.

Check all bolts are tight (Figure 6.4).

Photo # 132574

Figure 6.4

Photo # 132575

Figure 6.5

Adjustment

Photo # 132576

Note : The figures 6.1 to 6.17 are pictures removed from the housing of the plate shifter. These picture are only for demonstration purposes. If you have any troubleshooting with the plate shifter, do not open the housing but please call Pacific Press Co.

140014B-Semi automatic plate shifter manual.indd 16 10/7/2010 9:05:03 AM

6.0 MAINTENANCE AND TROUBLESHOOTING

b. Procedure 6.3.2- Side to side alignment shifter push plate arms. (Figure 6.6)

Watch if the arms of the plate shifter move at the same speed.

Photo # 132561

Figure 6.6

1. The plate shifter has two cylinders (Figure 6.6) , one for extending the push plate, the other for lifting the first cylinders assembly and both of them are connected to the flow controls (Figures 6.7 - 6.9). The plate shifter has eight flow controls and there are four on each side. Each side has one each for up rate, down rate, extend rate, and retract rate. The up rate and down rate flow controls are connected to the small cylinder.

140014B-Semi automatic plate shifter manual.indd 17 10/7/2010 9:05:05 AM

6.0 MAINTENANCE AND TROUBLESHOOTING

Shifter subplate component identification

Figure 6.9- Flow control-retract rate

Photo # 132562

Pivot point

Cylinder

Figure 6.7- Cylinders identification

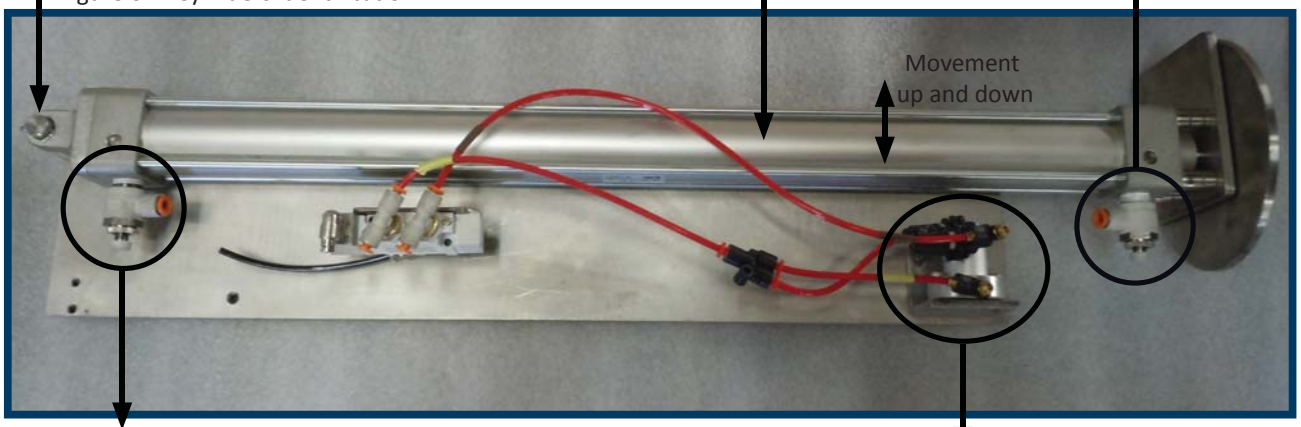

Photo # 132563

Photo # 132564

Figure 6.8-Flow control-extend rate

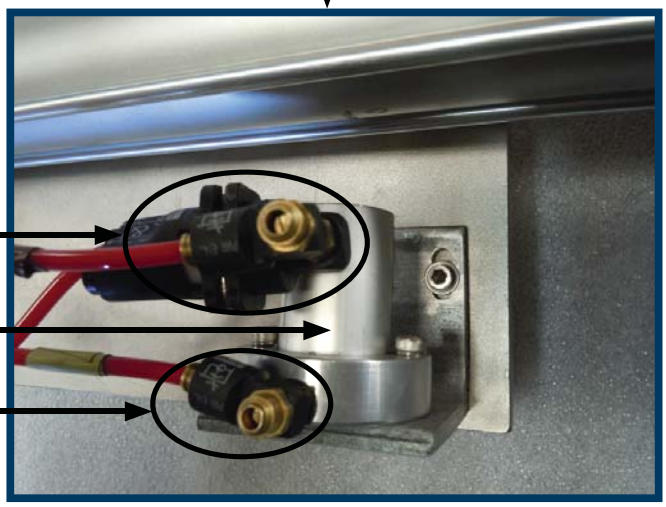

Photo # 132565

Figure 6.10- Cylinder pancake and flow control up and down rate

140014B-Semi automatic plate shifter manual.indd 18 10/7/2010 9:05:07 AM

6.0 MAINTENANCE AND TROUBLESHOOTING

2. The most common adjustment required is to adjust the rates at which the push plates extend or retract. This is due to the fact that they wear differently. This aligment is corrected by adjusting each end of the pneumatic cylinder. The extend and retract controls have thumb screw adjustments with a jam nut to lock them (Figure 6.11), but to adjust the up and down controls you will need a small flat blade screwdriver (3.5 millimeters).

Photo # 132566

Figure 6.11- Thumb screw adjustement

3. Open the press and move the plate shifter into position to shift the first plate.

4. Next turn each flow control in (clockwise) until it stops (don't force it, as this can cause damage to the needle and seat). Then turn it out (counter clockwise) three full turns.

5. Push the button to shift (Figure 6.12), and watch the arms of the plate shifter move.

Picture # 132567

Figure 6.12- Push the button to shift

140014B-Semi automatic plate shifter manual.indd 19 10/7/2010 9:05:11 AM

6.0 MAINTENANCE AND TROUBLESHOOTING

7. The goal here is to adjust the flow controls so that both arms move together. Turning a flow control counter clockwise will increase the rate, and turning clockwise will decrease the rate.

8. Push plate vertical adjustement : If both arms don't come up at the same time you will need to adjust the up control on the slow side. Turn it counter-clockwise a quarter turn and test again.

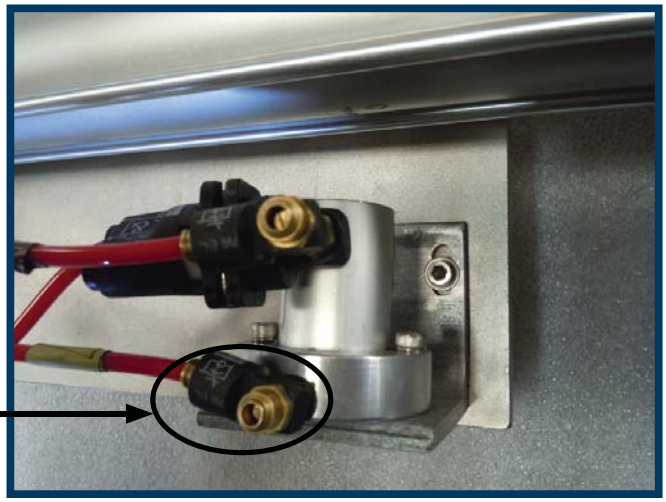

Photo # 132565

Figure 6.13- Up control

Photo # 132568

Figure 6.14 - Down position

Photo # 132569

Figure 6.15 - Up position

9. If both arms don't extend at the same rate you will need to adjust the extend control on the slow side. Turn it counter-clockwise a quarter turn and test again.
10. If both arms don't retract at the same rate you will need to adjust the retract control on the slow side. Turn it counter-clockwise a quarter turn and test again.

140014B-Semi automatic plate shifter manual.indd 20 10/7/2010 9:05:12 AM

6.0 MAINTENANCE AND TROUBLESHOOTING

c. Procedure 6.3.3- How to align the plate shifter rail

During the transportation or at any point in the life of the filter, a bolt may become loose and the horizontal rail may drop or become uneven. If this occurs the rail must be realigned.

a. Visually inspect the alignment of the shifter rail. If it is not straight, adjust the shifter rail carefully. Use a lazer to shoot from one end of the shifter rail to the other. This will show where the rail is out of alignment.

b. Visually check if the tracking of the filter plates is parallel to the shifter rail. If it is not parallel, adjust it carefully.

c. If the semi automatic plate shifter hits the handles of the filter plates, it means that the shifter rail is too high to the tracking of filter plates. In this case, adjust the shifter rail in a lower position.

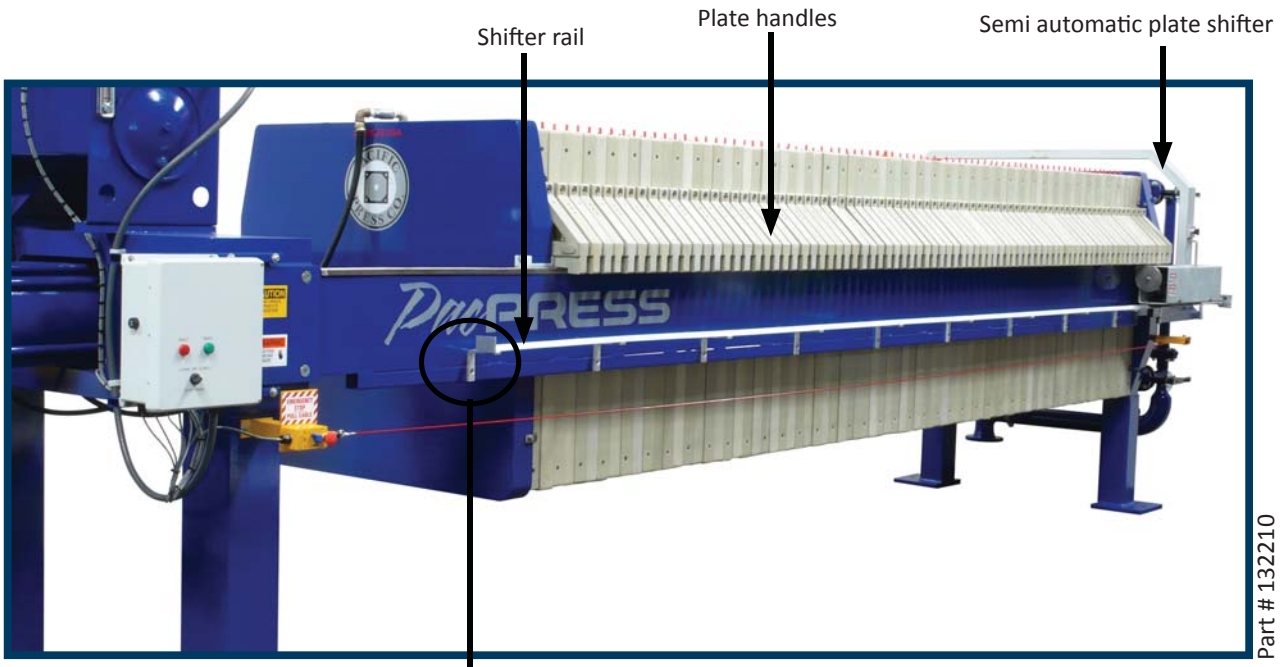

Figure 6.16

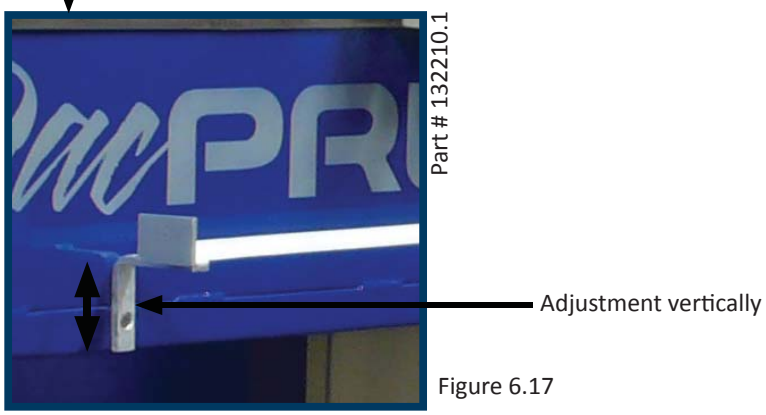

Figure 6.17

140014B-Semi automatic plate shifter manual.indd 21 10/7/2010 9:05:14 AM

PacPRESS
PACIFIC PRESS COMPANY
2418 Cypress Way • Fullerton, CA 92831
714.525.0630 • 800.878.8029 • fax.714.525.2664
www.pacpress.com

ELECTRIC HYDRAULIC MANUAL

Photo # 132197

140122A-Electric Hydraulic.indd 1 10/7/2010 9:09:00 AM

1.0 TABLE OF CONTENTS

1.0 Table of contents 2

2.0 Receiving and Installation 3

3.0 Safe operation 4

4.0 Component identification 5

5.0 Hydraulic pack location 7

6.0 Operation 8

6.1 Operational description of hydraulic closure 9
6.2 Opening the press 10
6.3 Bombay doors 11
6.4 Electric hydraulic assembly drawing 12
6.5 Hydraulic diagram - 800, 1000, 1200 mm filter presses 13
6.6 Hydraulic diagram - 1500 mm filter pres 14

7.0 Hydraulic cylinder 15

8.0 Maintenance and Troubleshooting 16

8.1 Maintenance 16
8.2 Troubleshooting 16

Note: **These instructions are intended for use by qualified personnel for instruction and maintenance purposes. Reproduction in whole or in part in not permitted without the express written permission of Pacific Press Company.**

140122A-Electric Hydraulic.indd 2 10/7/2010 9:09:02 AM

2.0 RECEIVING AND INSTALLATION

Each hydraulic system is carefully adjusted and tested in the factory prior to shipping.

When you receive your hydraulic system, you should:

1- Observe the condition and report any damage immediately to the carrier that delivered the equipment.

2-Check for hydraulic leaks and that the fluid level is correct.

3- If the equipment will not be put in service immediately it must be stored in a clean, dry and warm location. It is also recommended that the hydraulic tank must be drained due to moisture condensing in the tank.

If any visible damage has occurred notify the trucking company immediately as you will have to make a claim with them. It is best to make a notation on the freight bill of any damage, point out the damage to the truck driver and have the truck driver sign a notation as to the damages.

140122A-Electric Hydraulic.indd 3 10/7/2010 9:09:02 AM

3.0 SAFE OPERATION

Be sure to read and understand the safe operation in this manual. For your safety do not install, operate or attempt maintenance procedures until you understand the warning statements. A warning statement indicates a possible unsafe condition that can cause personnel harm.

1. Warning: Always first read this manual before installation, start-up, operation and maintenance.

2. Warning: Only trained, authorized personnel should operate, start-up or maintain the hydraulic system.

3. Warning: The hydraulic system maintains a pressure of above 3000 psi. Be sure that the hydraulic pressure is de-energized before attempting maintenance on the system.

4. Warning: Always wear eye protection when operating hydraulic system. A line may break and spray hydraulic fuid in your eyes.

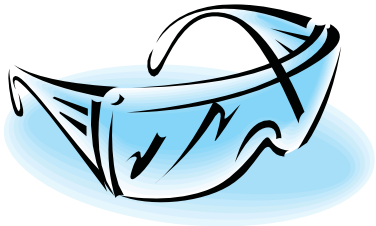

140122A-Electric Hydraulic.indd 4 10/7/2010 9:09:02 AM

4.0 COMPONENT IDENTIFICATION

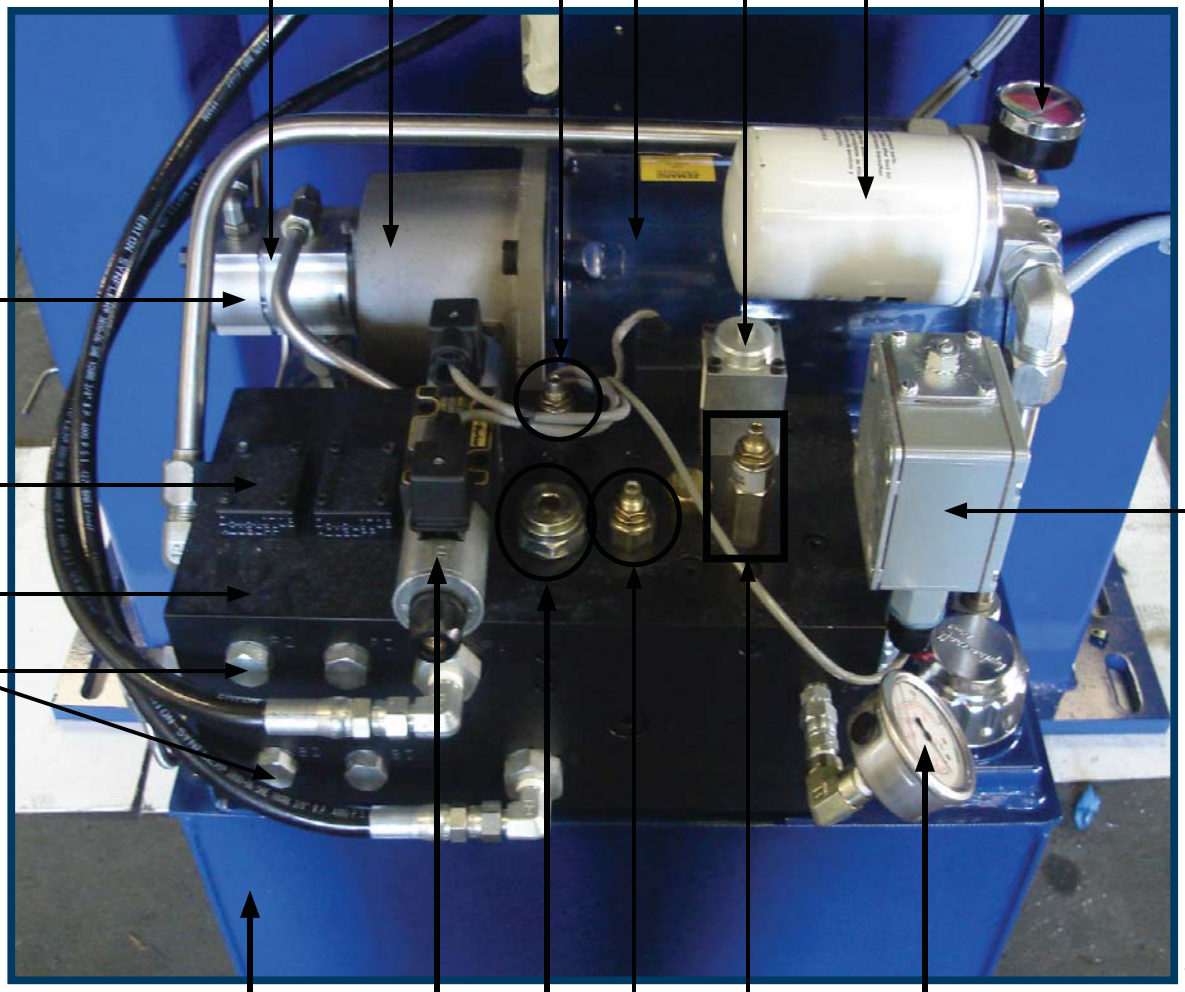

Note: The pictoral is for illustration purposes only. This is the universal design and your unit may differ.

140122A-Electric Hydraulic.indd 5 10/7/2010 9:09:03 AM

4.0 COMPONENT IDENTIFICATION

1-Pressure relief valve
The pressure relief valve controls the over pressurization and is adjusted to a predetermined pressure.

2-Pressure release valve
The pressure release valve is designed to rapidly release the pressure of the system in order to open the hydraulic closure of the filter press.

3-Electric motor
This motor powers the hydraulic pumps to create the hydraulic pressure which drives the hydraulic cylinder.

4-Oil filter
The oil filter is used to maintain clean oil in the system. The filter is located on the return side of the cylinder on the way back to the reservoir.

5-Gauge
The gauge indicates the hydraulic pressure during the closure process.

6-Pressure switch
This switch will trip an electrical contact when turning the hydraulic pump off.

7-Unloading valve
The unloading valve allows the pressure to release when the cylinder is to be retracted.

8-Directional control valve
A directional control valve allows fluid to flow to different paths from one or more sources. This valve usually consists of a piston inside a cylinder which is controlled electrically. The movement of this cylinder regulates the flow of hydraulic fluid controlling the volume in a specific direction.

9-Hydraulic reservoir
The hydraulic reservoir is the storage where the hydraulic fluid resides in the cylinder. The volume of the reservoir depends on the filter press size. The reservoir is filled with prefiltered fluid to the full mark on the level gauge.

10-Check valve
This valve allows a pressurized hydraulic line to remain pressurized. The check valve normally allows flow in one direction and blocks flow the opposite direction. A check valve is used in any line where back flow is not acceptable.

11-Hydraulic manifold distribution block
The manifold is the distribution block supports the different types of valves and hydraulic hardware. The distribution block is the centralized point where hydraulic oil can perform all functions required.

12-Hydraulic low pressure pump
This pump is used for low pressure and high volume. This hydraulic pump allows the cylinder to close rapidly.

13-Hydraulic high pressure pump
This pump used for high pressure and low volume is the final stage before the maximum pressure is reached in the closure cycle.

14-Ports
The ports are located in the hydraulic manifold and provide a passageway for fluid (air or hydraulic fluid) to flow to or from other components.

140122A-Electric Hydraulic.indd 6 10/7/2010 9:09:04 AM

5.0 HYDRAULIC PACK LOCATION

The hydraulic system that is powered provides reliable operation. The electric hydraulic allows the pressurization of the cylinder which opens or closes the filter press and/or the bombay doors.
The position of your hydraulic system can be different according the configuration of your filter press :
-Top mounted : the hydraulic system is positioned at the top of the cylinder. (Figure 5.1)
-Standard mounted : the hydraulic system is below the cylinder. (Figures 5.2 & 5.3)

HYDRAULIC PACK LOCATION

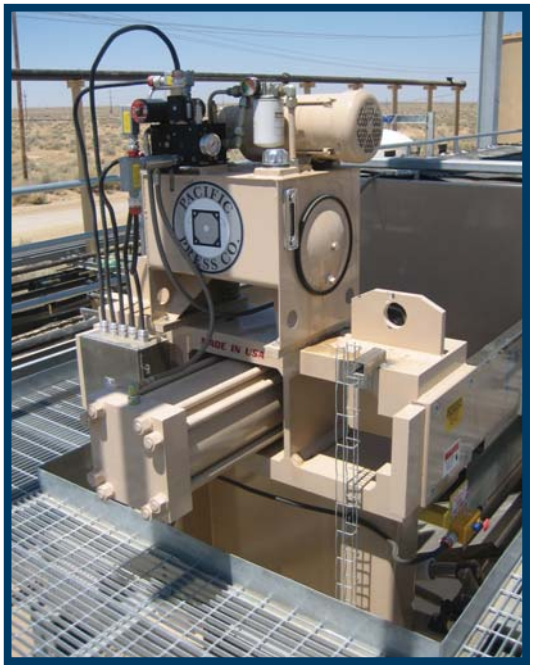

Photo # 132268

Figure 5.1- Top mounted

Photo # 132091

Figure 5.2-Overhead below the cylinder

Photo # 132198

Figure 5.3-Standard mounted

140122A-Electric Hydraulic.indd 7 10/7/2010 9:09:04 AM

6.0 OPERATION

To close or open your filter press, you need to extend or retract your cylinder by using the hydraulic system. Either your filter press comes with a panel control, start the process by turning on the open press switch button (Figure 6.1a). Or your filter press comes with the PLC option, start the operation by activating the start button on the manual screen of the PLC (Figure 6.2a).

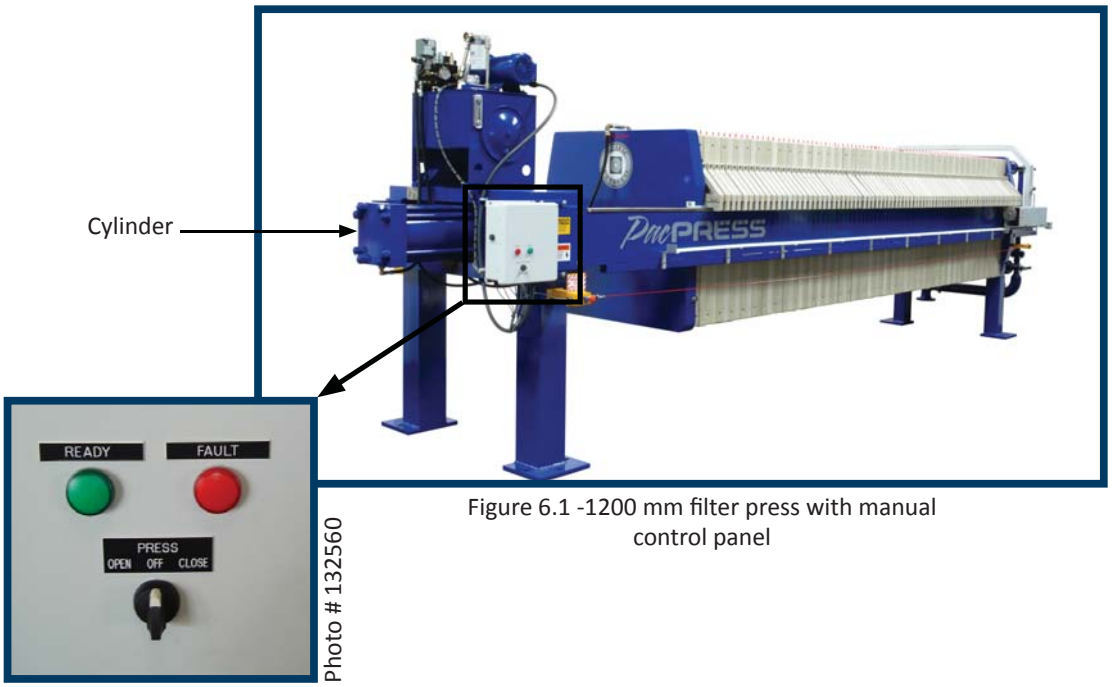

Photo # 132210

Figure 6.1 -1200 mm filter press with manual control panel

Photo # 132560

Figure 6.1a

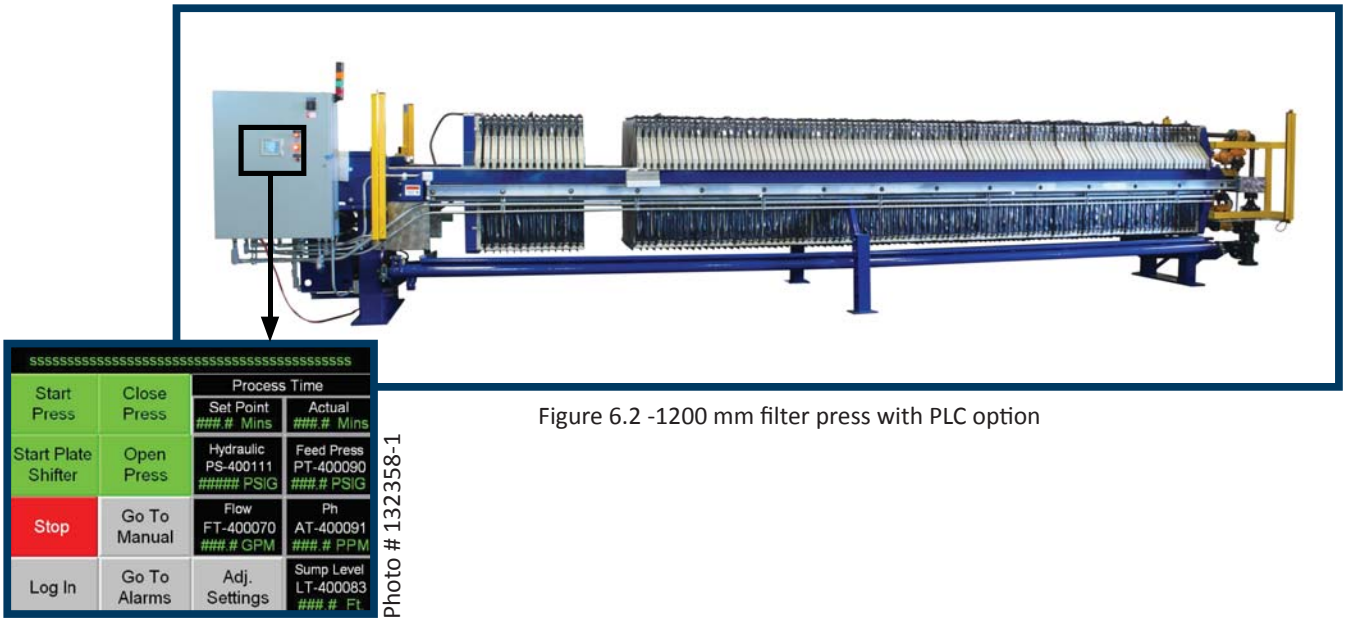

Photo # 132029

Figure 6.2 -1200 mm filter press with PLC option

Photo # 132358-1

Figure 6.2a

140122A-Electric Hydraulic.indd 8 10/7/2010 9:09:10 AM

6.0 OPERATION

6.1- Operation description of hydraulic closure

The start of the process is activated by turning on or pushing the “close press” button:

1- The electric motor will start the operation. (Figure 6.3)

2-The oil from the hydraulic reservoir (Figure 6.4) is pressurized by one or two pumps depending on the design through the pumps (Figure 6.5) . If your hydraulic system is equipped with two pumps. One pump is used for low pressure and high volume. The second pump is used for high pressure and low volume.

3-The pressurized hydraulic oil is pumped through the valve SV153 (see drawing page 13). This valve is a part of the directional control which sends the fluid to the end of the cylinder depending on the direction required. When the cylinder fills up with oil, the cylinder will extend and the filter press will close.

4- The unloading circuit for the low pressure pump brings back the over pressurized hydraulic fluid to the reservoir when the hydraulic pressure reaches 600 psi.

Photo # 132544

Figure 6.3 - Motor

Photo # 132545

Figure 6.4 - Hydraulic reservoir

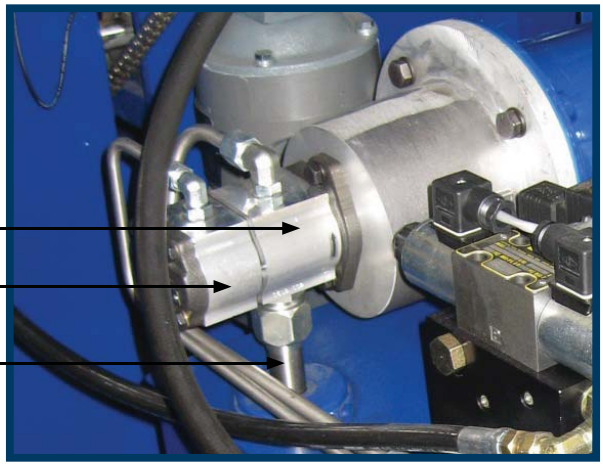

Photo # 132197-1

Figure 6.5 - Pumps

140122A-Electric Hydraulic.indd 9 10/7/2010 9:09:13 AM

6.0 OPERATION

6.2- Opening the press

Once your process is activated by turning on or pushing the “open press” button:

1- The electric motor will start the operation.

2-The oil from the hydraulic reservoir is pressurized by a pump to create pressure for opening the press.

3-The pressurized hydraulic oil is diverted through the valve SV151 (see drawing page 13). This valve is a part of the directional control. To retract the cylinder, the oil is pumped to the front side of the cylinder. At the same time, the oil from the back side of the cylinder returns to the reservoir.

4- The follower is considered open when the follower proximity sensor (Figure 6.6) is contacted and the pump stops pumping.

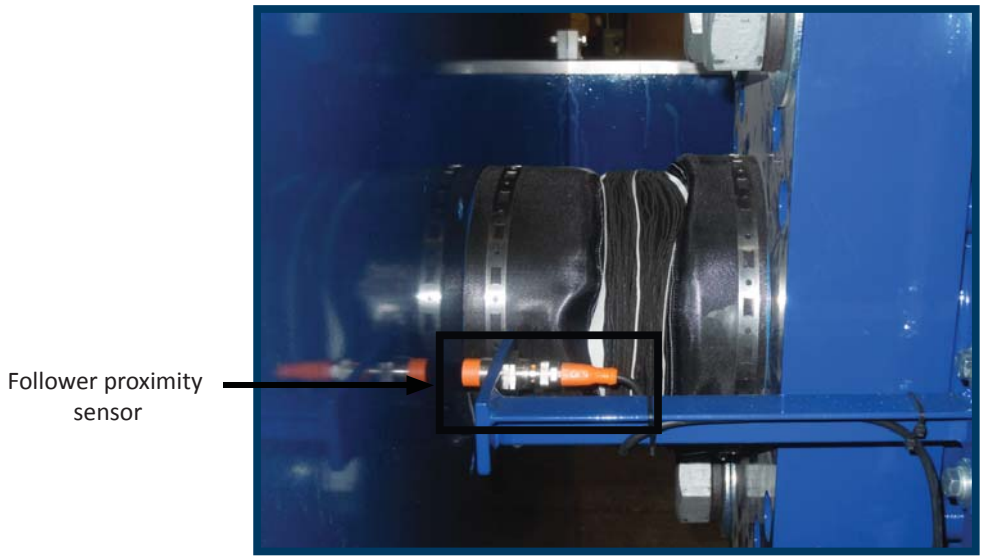

Figure 6.6

140122A-Electric Hydraulic.indd 10 10/7/2010 9:09:14 AM

6.0 OPERATION

6.3- Bombay doors

If your filter press comes with bombay doors, the hydraulic system will also be used to operate them. (Figure 6.7)

Depending on the size of the filter press the bombay doors can have a single cylinder with a linkage to operate both doors (Figure 6.8), two cylinders with two linkages or four individual cylinders. This hydraulic cylinder is hooked to the hydraulic system by using a single hose. The cylinder is a spring return design so there is only one hose.
The valve SV154 is used for operating the doors. (See drawing page 13)

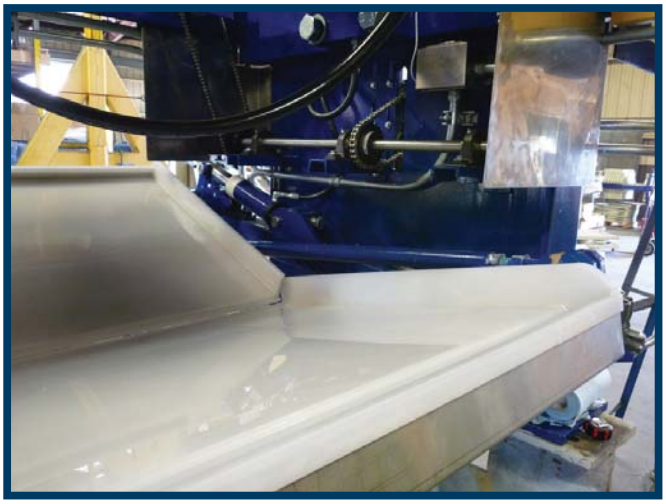

Photo # 132546

Figure 6.7

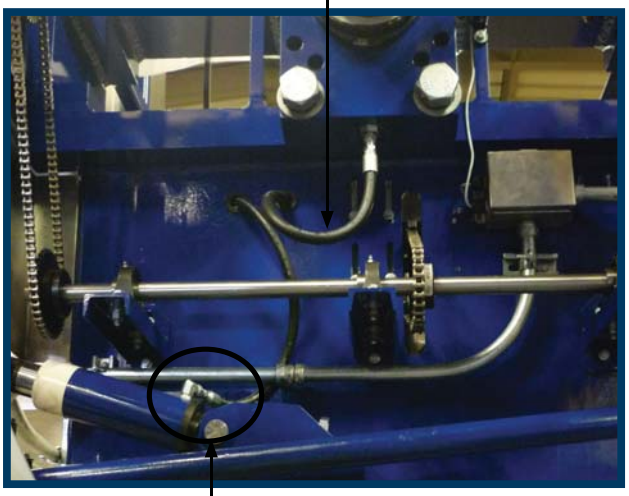

Photo # 132547

Figure 6.8

NOTE : See the drawing # 490052 for bombay doors hydraulic parts

140122A-Electric Hydraulic.indd 11 10/7/2010 9:09:16 AM

6.0 OPERATION

6.4- Electric hydraulic assembly drawing

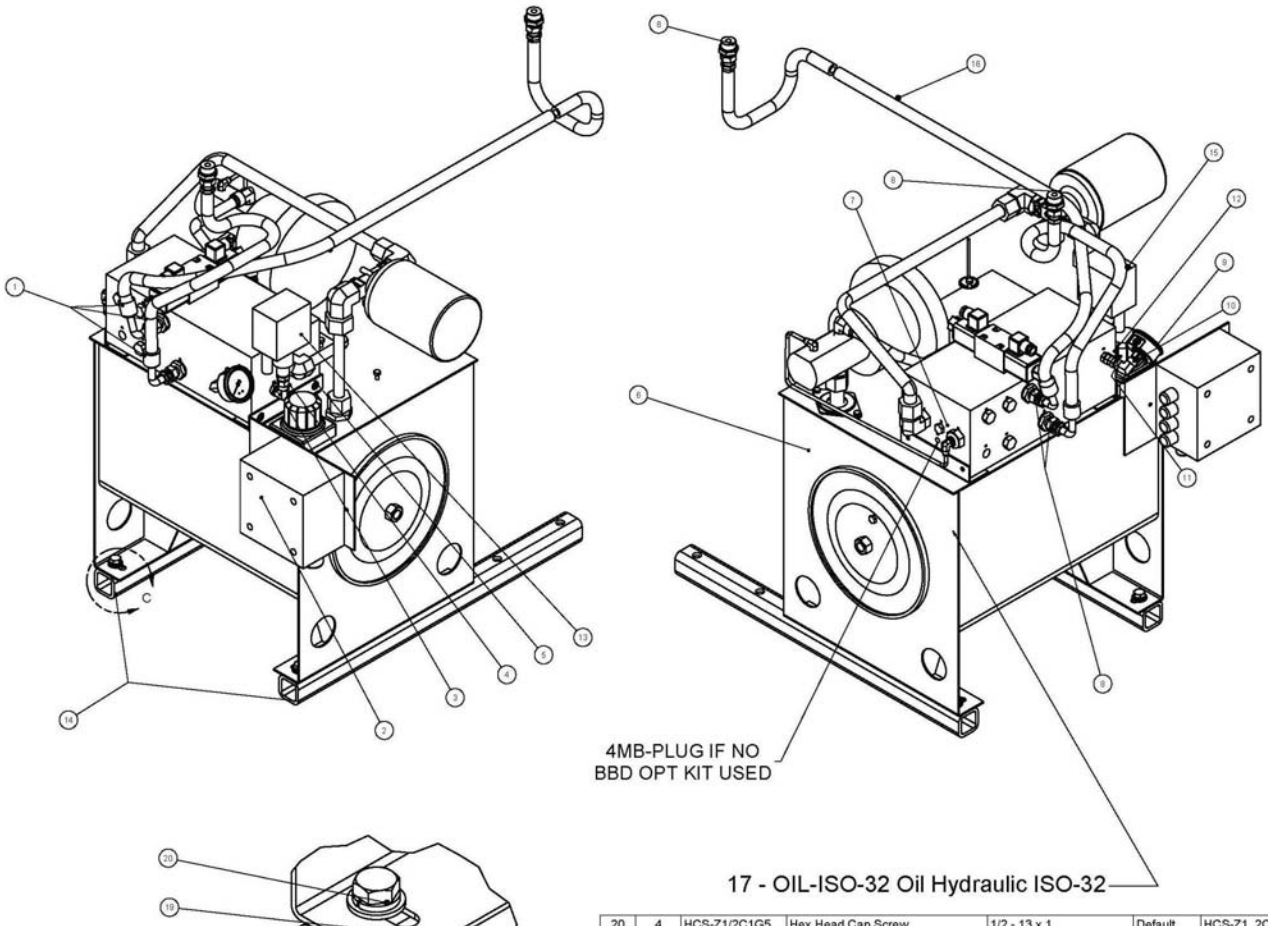

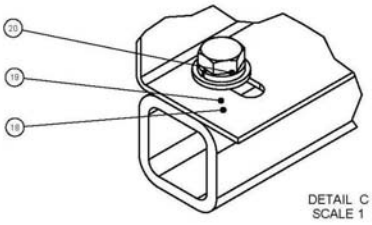

ITEM	QTY	P/N	DESCRIPTION	SIZE	MATERIAL	FILE NAME
20	4	HCS-Z1/2C1G5	Hex Head Cap Screw	1/2 - 13 x 1	Default	HCS-Z1_2C1.00G5.ipt
19	4	SLW-Z1/2	Split Lock Washer	1/2	Default	SLW-Z1_2.ipt
18	4	FW-Z1/2	Washer, SAE	1/2	Default	FWS-Z1_2G5.ipt
17	14	OIL-ISO-32	Oil Hydraulic ISO 32			
16	1	8X67-8FJX-8FJX	Hose 67" Lg x 8FJX			
15	1	8x55-8FJX-8FJX	Hose 55" Lg x 8FJX			8x55-8FJX-8FJX.iam
14	1	310352	Kit Assy, Hyd Pack Mtg, L			
13	1	836T-T303J	Pressure Switch...		Default	490051-055.ipt
12	1	450239	Hyd Fitting, 1/4" MB x 1/4" MP 4MB-4MP		Default	450239.ipt
11	1	450064	Bushing, Swivel, 4MP-4FPX	1/4" NPT	Brass	450064.ipt
10	1	509066	Elbow, Fitting Hydraulic, 4FP-4FP90		Default	509066.ipt
9	1	5000CB - 470004	GAUGE, 5000 psi, 9692253	1/4"NPT	Default	470004.ipt
8	4	450264	Fitting, 3/4" MB x 1/2" MJ, Straight, Hy, 12MB-8MJ		Default	450264.ipt
7	1	4MB-PLUG	Plug, 1/4" MB, 4MB-PLUG		Default	450240.ipt
6	1	490050	Assy Hydraulic Pack			490050.iam
5	1	6MB-PLUG	Plug, 3/8" MB, 6MB-PLUG		Default	450241.ipt
4	1	450238	Nipple 3/8" MNPT x 3/8"MJ, 6MP-6MJ		Default	450238.ipt
3	1	450253	Elbow, Hyd.,3/8MBx3/8FPSwivel, 90Deg 6MB-6FPX90		Default	450253.ipt
2	1	375137	Assy.J-Box Hydraulic/Electric			375137.iam
1	3	8MB-PLUG	Plug, 1/5" MB, 8MB-PLUG		Default	450235.ipt

UNLESS OTHERWISE SPECIFIED
TOLERANCES
FRACTIONS(NON-MACHINED)
OVER 2 FT. ± 1/8
UNDER 2 FT. ± 1/16
MACHINED 0 +± .050
MACHINED .00 +± .030
MACHINED .000 +± .010
ANGLES ± 1 DEG
ALL DIMENSIONS ARE IN INCHES
FILLET RADII .015 TO .030
BREAK ALL CORNERS .015 MAX.
MACHINED PARALLELISM & SQUARENESS .001/FT

DRAWN G.McGinnis	1/20/2010	
CHECKED G.McGinnis	3/31/2010	
MFG		
APPROVED G.McGinnis	3/31/2010	

PACIFIC PRESS CO.
2418 CYPRESS WAY
FULLERTON, CA 92831
(714) 525-0630 FAX (714) 525-2664

TITLE
ELECTRONIC / HYDRAULIC ASSY
UNIVERSAL MANIFOLD, NEMA 4
ENCLOSURE (1200)

SIZE D | DWG NO 495035 | REV B
SCALE: | DO NOT SCALE DRAWING | SHEET 1 OF 1

140122A-Electric Hydraulic.indd 12 10/7/2010 9:09:18 AM

6.0 OPERATION

6.5- Hydraulic diagram - 800 mm, 1000 mm and 1200 mm filter presses

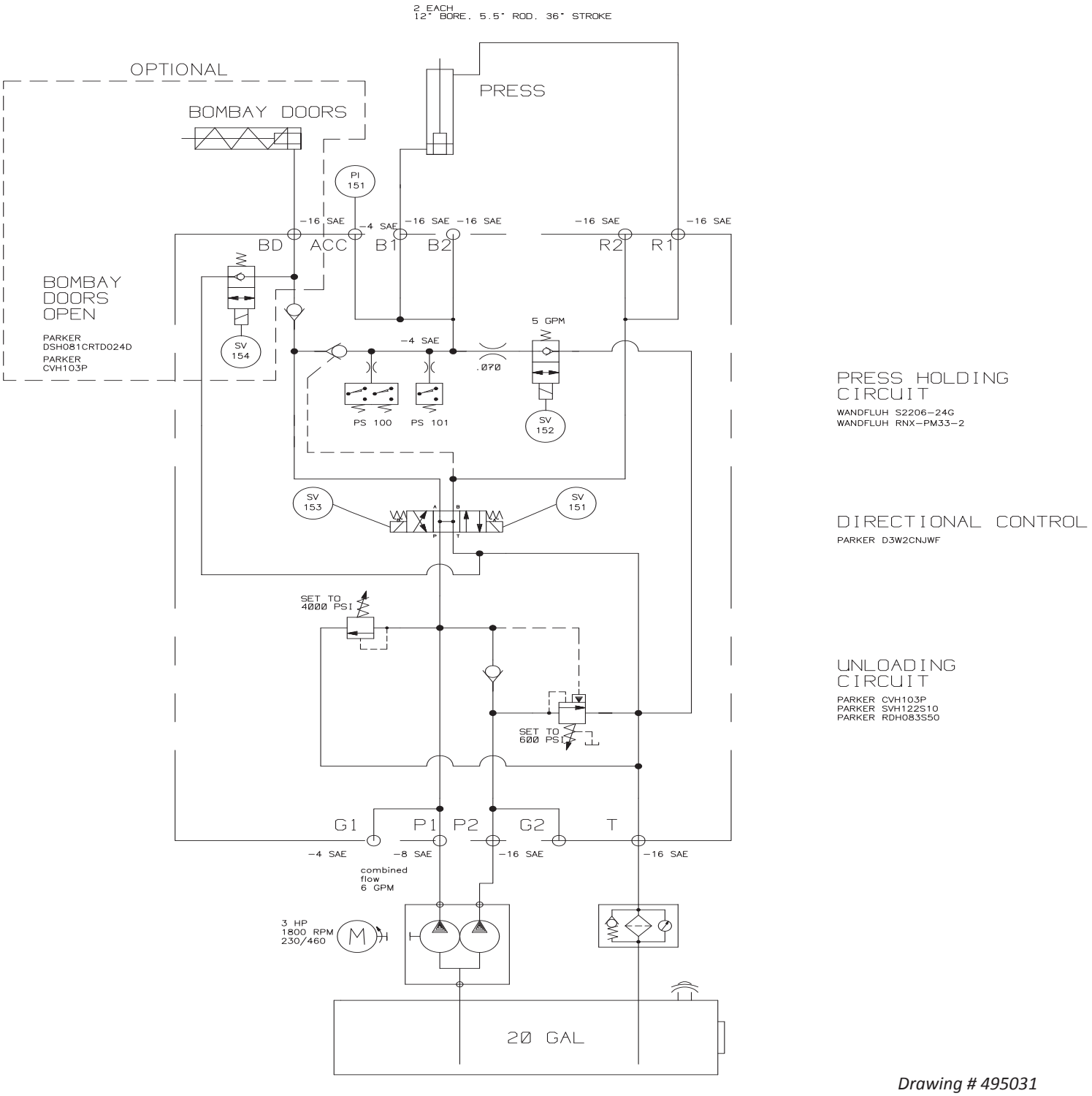

Drawing # 495031

140122A-Electric Hydraulic.indd 13 10/7/2010 9:09:20 AM

6.0 OPERATION

6.6- Hydraulic diagram - 1500 mm filter press

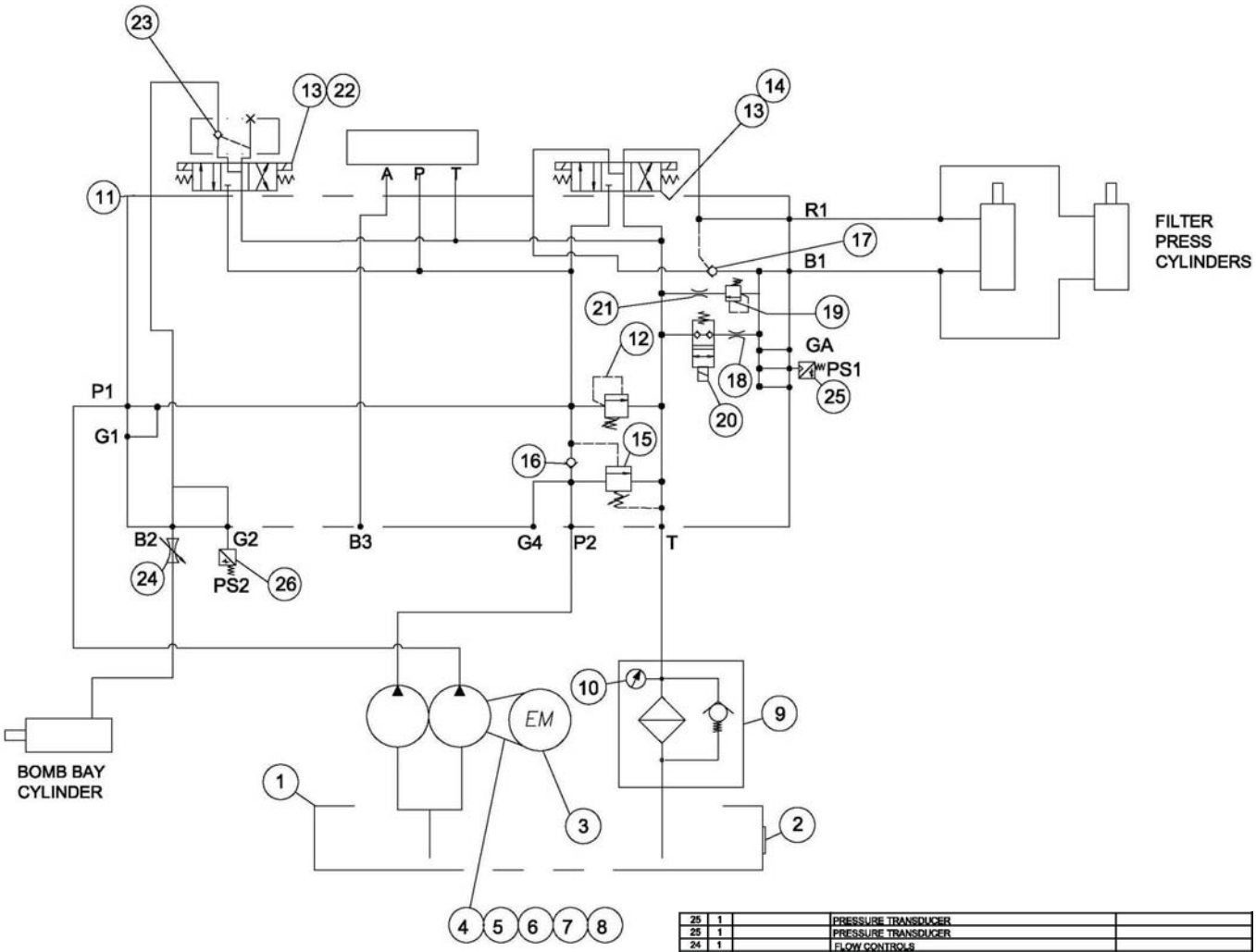

ITEM	QTY	P/N	DESCRIPTION	MANUFACTURER
25	1		PRESSURE TRANSDUCER	
25	1		PRESSURE TRANSDUCER	
24	1		FLOW CONTROLS	
23	2		P.O. CHECK VALVE	
22	1		BOLT KIT	
21	1		ORIFICE, .005 1/8-27 NPT	
20	1		SOL. VALVE 2 WAY W/DIN CONN. 24 VDC	
19	1		RELIEF VALVE	
18	1		ORIFICE,	
17	1		P.O. CHECK VALVE	
16	1		CHECK VALVE	
15	1		SEQUENCE VALVE	
14	1		BOLT KIT	
13	2		DIRECTIONAL CONTROL	
12	1		RELIEF VALVE	
11	1		MANIFOLD SPECIAL	
10	1		FILTER GUAGE	
9	1		RETURN FILTER	
8	1		SPIDER INSERT	
7	1		HALF COUPLER	
6	1		HALF COUPLER	
5	1		PUMP MOTOR ADAPTER	
4	1		PARKER PUMP	
3	1		ELECTRIC MOTOR	
2	1		FLANGE	
1	1		RESERVOIR, 20 GALLON	

UNLESS OTHERWISE SPECIFIED
TOLERANCE
FRACTIONS(NON-MACHINED)
OVER 2 FT. ± 1/8
UNDER 2 FT. ± 1/16
MACHINED ±.005
BENDING ±0 min .005
MACHINED ±0 min .010
ANGLES ± 1 DEG
ALL DIMENSIONS ARE IN INCHES
FILLET RADII .015 TO .030
BREAK ALL CORNERS .010 MAX.
MACHINED PARALLELISM & PERPENDICULARITY

DRAWN	G.McGinnis	9/29/09
CHECKED		
MFG		
APPROVED		

PACIFIC PRESS CO.
2115 EATON, PA 18201
(717-) 825-0850 FAX (717-) 825-2884

TITLE
Diagram, Hydraulic, 1500 Elect Hyd Sys, AIS (New Manifold)

SIZE	DWG NO	REV
A	495034	B

SCALE: 1 / 10 | DO NOT SCALE DRAWING | SHEET 1 OF 1

7.0 HYDRAULIC CYLINDER

Below is a diagram of typical cylinder used by Pacific Press. Identification of the part list is listed.

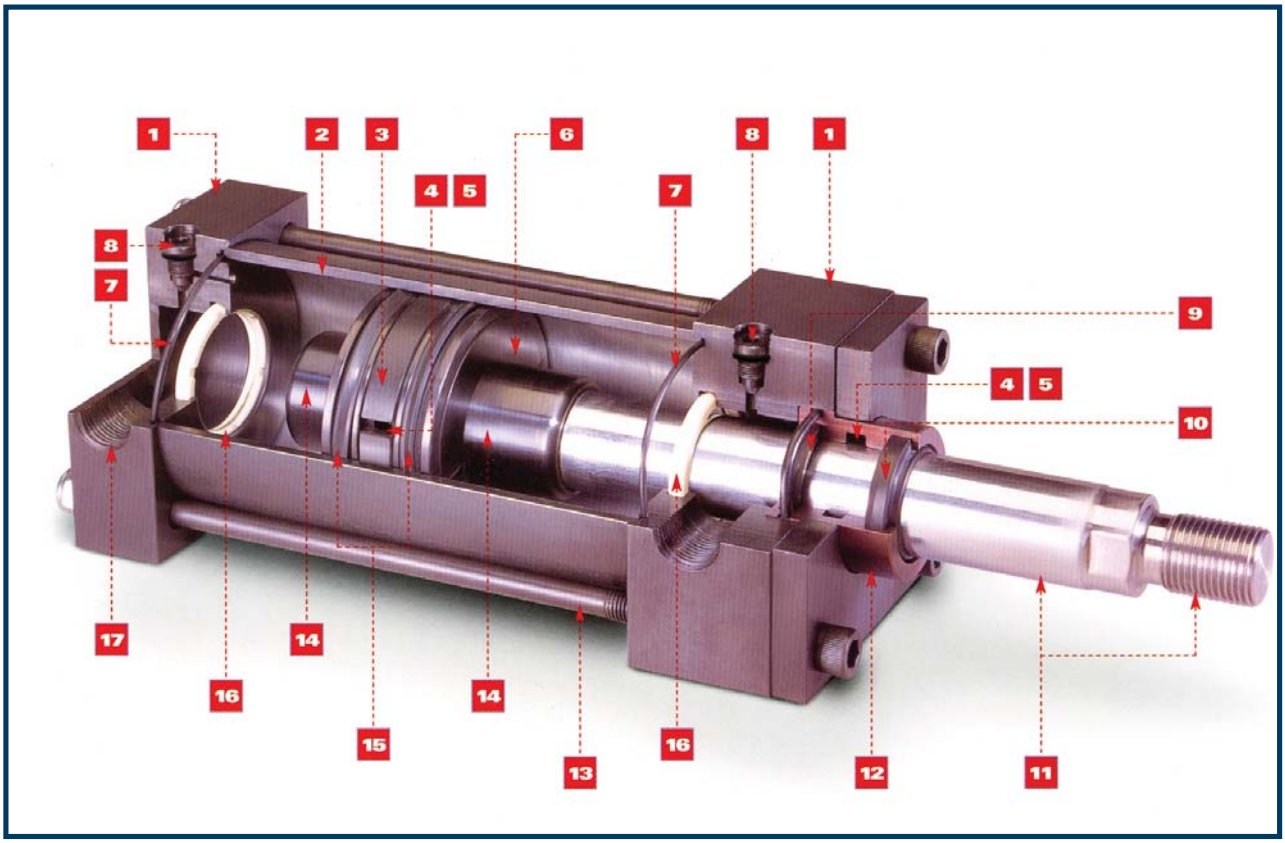

Photo #132539

Figure 7.0.1 - Hydraulic cylinder

1- Heads and caps
2-Cylinder tube
3-Wear band
4-Lubrication reservoirs
5-Lubricant (not shown)
6-Piston
7-Tube seals
8-Cushion adjustements screw
9-Rod seal
10-Rod wiper
11-Piston rod
12-Bearing cartridge
13-Tie rods
14-Cushion hubs
15-Piston seals
16-Cushion seals
17-Ports

140122A-Electric Hydraulic.indd 15 10/7/2010 9:09:22 AM

8.0 MAINTENANCE AND TROUBLESHOOTING

8.1 Maintenance of electric hydraulics

The electric hydraulic system is engineered to be accessed, easily and is bolted on to facilitate easy maintenance and inspection.

8.1.1- Upon start up

a . Inspect hydraulic lines for leaks around the pressure pack around the cylinder. If leaks are found, the lines must be tightened or replaced.
b. Inspect fittings for leakage.
c. Check for correct closure pressure. Refer to press manual for this information.
d. Before starting the pump-motor, you should check for correct direction of pump rotation. Determine if it is clokwise (right hand) rotation or counter clokwise (left hand) rotation when viewed from the pump shaft end. To verify correct pump-motor rotation, “jog” the pump-motor by selecting the motor starter “on” control for one second and then turn”off” the pump-motor. Make necessary changes to electric motor wiring connections if the pump rotation is not correct. Sustained incorrect rotation of the hydraulic pump will cause serious pump damage.
Prior to starting the pump-motor, you should also check the electric motor’s power wiring drawing for correct wiring connections. You must set the power unit assembly relief valve adjustement(s) and/or pressure compensated pump compensator ajustement(s) to minimum pressure.

8.1.2- Weekly

a. Check hydraulic reservoir fluid level. The level in the hydraulic reservoir must be maintened to provide trouble-free service. Use AW ISO 32.

8.1.3- Semi- annual or Annual

a. Check the condition of the oil-it is best to take a sample and inspect to see that water has not affected the oil. This would be visually seen as a milky white contaminant. If it is necessary to replace use ISO 32 hydraulic fluid. If there is any question send the oil out for analysis to a third party vendor.
b. Replace oil filter spin on element.

8.2 Troubleshooting of electric hydraulics

For troubleshootingof the hydraulic circuit , a trained or qualified hydraulic technicians is recommended. The diagram on page 13 can be used for this purpose.

8.2.1- The presses closes, but does not go up to pressure (hydraulic pump continues to pump)
a. Check hydraulic fluid level.
b. Check for oil leaks.
c. Adjust the pressure relief valve.
d. Check the pressure release valve.
e. Replace the hydraulic pump.

140122A-Electric Hydraulic.indd 16 10/7/2010 9:09:23 AM

8.0 MAINTENANCE AND TROUBLESHOOTING

8.2.2- The press closes, but does not go up to pressure (hydraulic pump stops)
a. Adjust / Check hydraulic pressure unloading valve set point.

8.2.3- The press does not open
a. Check the decompress valve.
b. Check the pressure switch.
c. Check the hydraulic filter.

8.2.4- The press opens slowly
a. Check the hydraulic pumps.
b. Check hydraulic oil temperature (possible too cold)

8.2.5- Other hydraulic problems
a. Worn seals in hydraulic the cylinder (replace seals).
b. Worn seals in the hydraulic pump (replace pump).

8.2.6- Noise or vibration
a. Mounting misalignment between pump and motor shafts due to rough handling in shipping can cause noise and vibration . If noisy, check shaft alignment with a dial indicator and, if necessary, align to within tolerance on pump specification sheet. Check the manufacturer's date sheet for maximum misalignment tolerance.

8.2.7- Pump noise
a. A noisy pump may be an indication of a restricted pump inlet line. Care should be taken in starting the system when the fluid temperature is below 60° Fahrenheit. Low temperatures cause the viscosity of the oil to increase which increases resistance to flow in the inlet line to the pump. This will cause a reduced pressure at the pump inlet resulting in cavitation. Allowed to continue, cavitation can cause severe pump damage.

If the hydaulic fluid cannot be maintained at a sufficiently high temperature to prevent cavitation, heaters should be installed in the reservoir and set to assure maximum fluid viscosity is not exceeded.

Air entering the pump inlet piping can also cause excessive pump noise. Check the oil level in the reservoir to be sure the pump inlet piping is below the oil level. Make certain all pump inlet piping is clean and that the joints are tight so that air cannot enter the pump.

8.2.9- Oil temperature
a. Generally, the temperature of the fluid at the pump inlet should not exceed 140° Fahrenheit. It is preferable to maintain temperature less than 120° Fahrenheit. Excessive temperature can damage the oil, cause valves to stick and accelerate component wear.

Note : Pacific Press Company offers service and parts for the filter press and filter press hydraulics.Please contact Pacific Press Co. (PPC) at 1.800.878.8029.

140122A-Electric Hydraulic.indd 17 10/7/2010 9:09:23 AM

PACIFIC PRESS COMPANY

2418 Cypress Way • Fullerton, CA 92831
714.525.0630 • 800.878.8029 • fax.714.525.2664
www.pacpress.com

QUICK STOP OPERATION MANUAL

Photo # 132210

Photo # 132366

140017C - Quick stop operation manual.indd 1 10/7/2010 9:11:08 AM

1.0 TABLE OF CONTENTS

1.0 Table of contents 2

2.0 Introduction 3

3.0 Safe operation 4

4.0 General information 5

4.1 Component identification 5
4.2 Quick stop designs 6
4.3 Operation states 6
4.4 Primary operation 7

5.0 Adjustment of quick stop 8

6.0 Testing proper operation 9

7.0 Maintenance and Troubleshooting 10

8.0 Assembly drawing 11

Note: **These instructions are intended for use by qualified personnel for instruction and maintenance purposes. Reproduction in whole or in part in not permitted without the express written permission of Pacific Press Company.**

140017C - Quick stop operation manual.indd 2 10/7/2010 9:11:13 AM

2.0 INTRODUCTION

This manual is intented to introduce and to familiarize you with the quick stop cord which now it is placed in operation in your facility.

The quick stop cord is a cable operated switch available to add the convenience of stopping the press quickly. The quick stop cord is intented to interupt the operation of the hydraulic cylinder. The quick stop cord is installed so that it is operated from both sides of the press.

Before attempting to install or operate your press, please read this manual carefully. This will insure that your new equipment is installed in a safe and efficient manner. If you have any questions regarding the safe of quick stop cords, please contact Pacific Press Co. (PPC) immediately at 1.800.878.2029.

140017C - Quick stop operation manual.indd 3 10/7/2010 9:11:13 AM

3.0 SAFE OPERATION

Be sure to read and understand the safety notice statements in this manual. For your safety do not install, operate or attempt maintenance procedures until you understand the warning statements. A warning statement indicates a possible unsafe condition that can cause personnel harm. A caution statement indicates a condition that can cause damage to the equipment.

1.Warning : The general use of a quick stop cord is to rapidly stop either the hydraulic closure of the filter press or the operation of any accessory feature.
2.Warning : Because the quick stop cord is not likely to be operated frequently, it is recommended that its function is checked, on a regular basis (start of shift or daily) to ensure proper operation.

1. Caution : The cord must be adjusted properly in order to funtion properly.
2. Caution : The cord must be reset in order to operate the hydraulic closure or other accessory function.
3. Caution : A frayed or stretched cable will not provide assurance of proper operation. Replace cable as it becomes worn over time.

140017C - Quick stop operation manual.indd 4 10/7/2010 9:11:13 AM

4.0 GENERAL INFORMATION

4.1 Component identification

The quick stop cord is a combination wire cable and push button activated device, that encompasses the filter plate area of the press. 630 series and larger filter presses can be equipped with a quick stop cord.
The quick stop cord is composed by different components. The main components are : the casing, a switch, a cable and four brackets. The four brackets allow the quick stop cord to go around the filter press and allow it to be operated from either side.

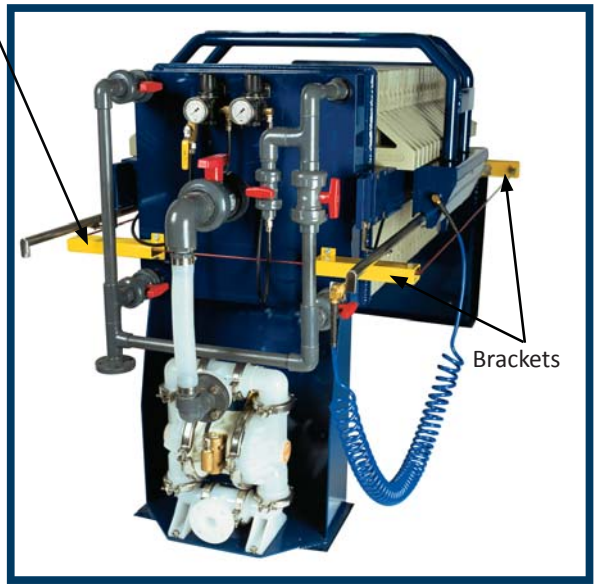

Figures 4.1 - Quick stop cord around the filter press

Figure 4.2

Figure 4.3

Note : Unfortunately the switch is a one piece component and parts are not avalaible. For example if you break the housing it can not be replaced and a complete unit must be purchased.

140017C - Quick stop operation manual.indd 5 10/7/2010 9:11:13 AM

4.0 GENERAL INFORMATION

4.2 Quick stop designs :

Photo # 132366

Figure 4.4- Pneumatic model of quick stop

Photo # 132580

Figure 4.5- Electric model of quick stop

4.3 Operation states

A latching mechanism maintains the OFF state of the safety contacts after the button is pushed or the red cable is pulled. The press cannot be restarted until the latch (on the pneumatic model, Figure 4.4) or the push button (on the electric model, Figure 4.5) is reset. Reactive the filter press by putting the selector on the “RUN POSITION” on the emergency stop (Figure 4.7)

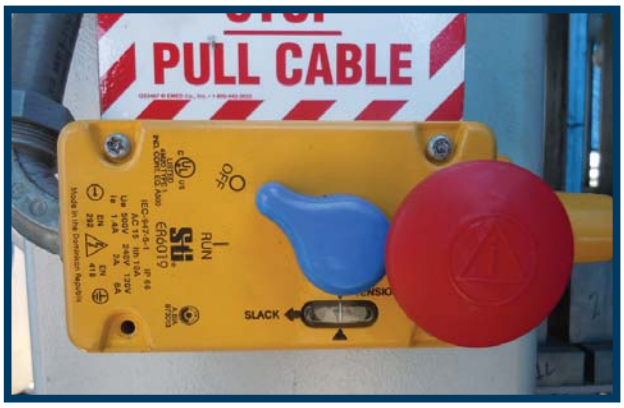

Photo # 132581

Figure 4.6-“OFF POSITION“

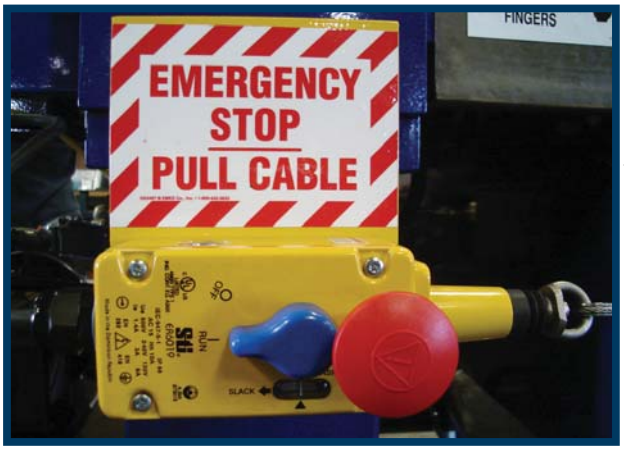

Photo # 132582

Figure 4.7-“RUN POSITION“

140017C - Quick stop operation manual.indd 6 10/7/2010 9:11:17 AM

4.0 GENERAL INFORMATION

4.4 Primary operation

Both the pneumatic and the electric models utilize a two way switch that trips when the cable is pulled or if the large button is pushed. On the pneumatic model the unit is reset by turning the reset knob to the run position. The unit provides a quick stop around the circumference of the filter press.

There are two methods to stop the operation:
4.4.1 Pull the cord (Figure 4.8).
4.4.2 Push the palm stop button. (Figure 4.9)
In either case the position of the indication button will show up like in figure 4.6. Once it is tripped the button indicator must be reset. This is accomplished by turning the indicator switch to the run position. (Figure 4.7)

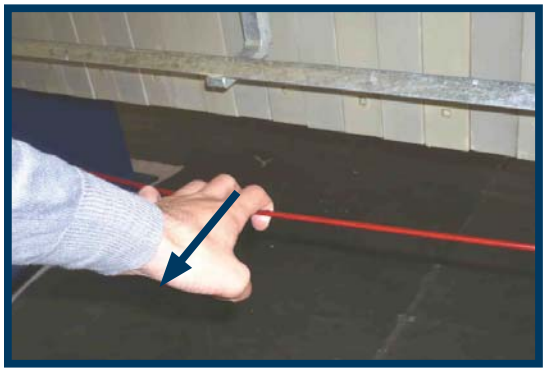
Photo # 132583

Figure 4.8 - Activate the stop by pulling on the cable

Photo # 132588

Photo # 132589

Photo # 132581

Figures 4.9- Push the palm stop button

140017C - Quick stop operation manual.indd 7 10/7/2010 9:11:21 AM

5.0 ADJUSTMENT OF QUICK STOP

Special attention should be paid during the start up and the operation of the press that the indicator on the switch is in the middle position when the press is open. This is set in the factory but may have changed during shipping. Simply turn the wire coil nut clockwise with a wrench to adjust the tension.

If for any reason such as off moving the filter press from a truck-it becomes necessary to remove the quick stop cord the tension will have to be readjusted :

Photo # 132412

Figure 5.1 - The safety cable adjustment bracket is located on the non-operational side of the tail end of the filter press.

Photo # 132413

Figure 5.2 - To adjust the tension of the safety cable, place the eyebolt through the hole in the bracket and tighten the bolt hand tight.

Photo # 132425

Figure 5.3 - The cable tension is shown adjusted properly. The black line is in the center.

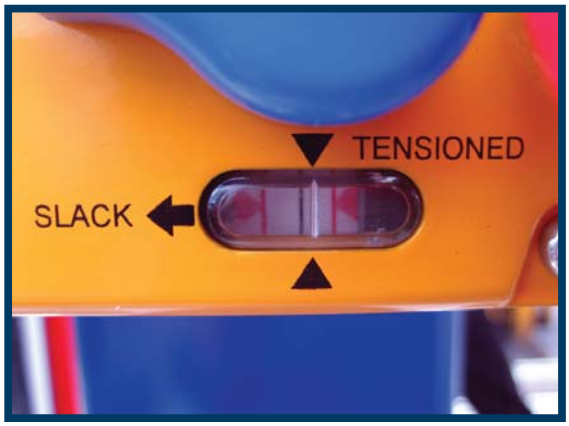

Photo # 132426

Figure 5.4 - The cable tension is shown adjusted improperly. The black line is to the left.

140017C - Quick stop operation manual.indd 8 10/7/2010 9:11:24 AM

6.0 TESTING PROPER OPERATION

When the stop cord is pulled, the blue selector on the emergency box goes to the “OFF POSITION“. Reactivate the filter press by putting the selector on the “RUN POSITION” on the emergency stop box.

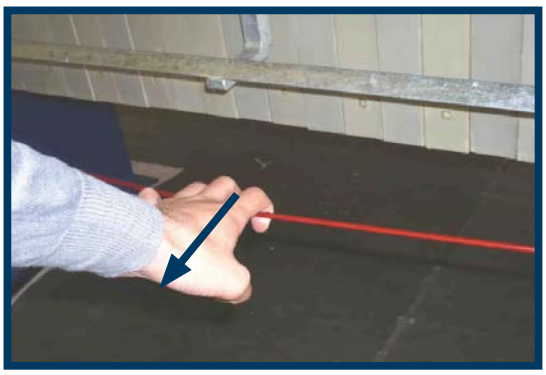

Photo # 132583

FIGURE 6.1

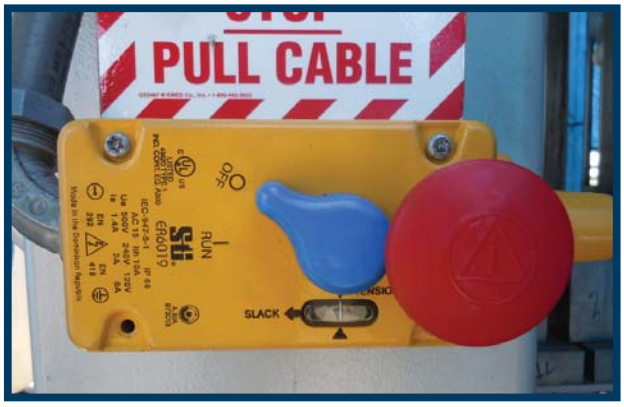

Photo # 132581

Figure 6.2-“OFF POSITION“

Photo # 132582

Figure 6.3-“RUN POSITION“

Note : If after pulling the cord, the press dosen’t start when you press the start button, check the emergency stop box and verify the selector on the emergency box in on the “RUN POSITION”.

Before, allowing normal machine use by an operator, check that when the rope is pulled the machine operation is halted and that the reset mechanism is latched.

After activation and before resetting, the press should be inspected along the entire length of the cable in order to detect the reason for activation.

140017C - Quick stop operation manual.indd 9 10/7/2010 9:11:27 AM

7.0 MAINTENANCE AND TROUBLESHOOTING

Weekly

a. Inspect the switch, casing and cable for damage. Pay special attention for any visible wear or damage to the rope and pulleys. Replace when necessary.

b. Check for correct tension in the cable and correct operation of the switch. Ensure correct operation of the quick stop.

c. Test operation : Pull cable, reset, push cable, reset.

Bi-annually

a. Isolate all power source, remove the lid and inspect all terminals for tightness, check fitting of tubing on pneumatic model.

b. Check tightness of screws on contact block.

c. Clean out any accumulation of dust or dirt.

140017C - Quick stop operation manual.indd 10 10/7/2010 9:11:29 AM

8.0 ASSEMBLY DRAWING

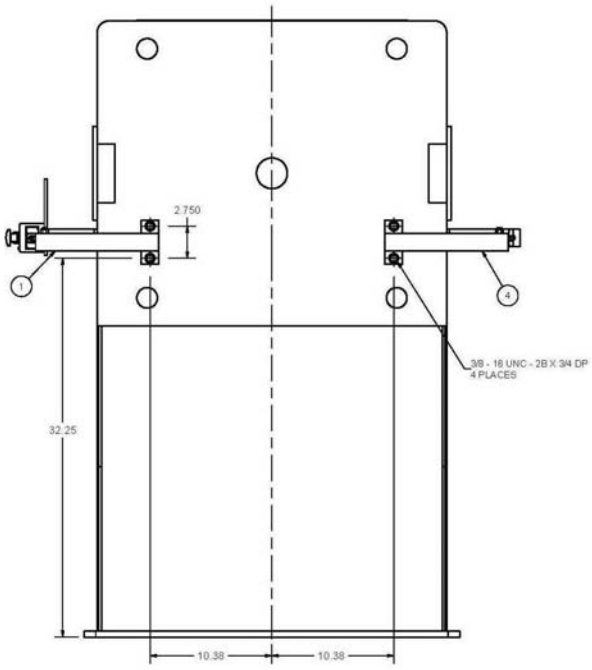

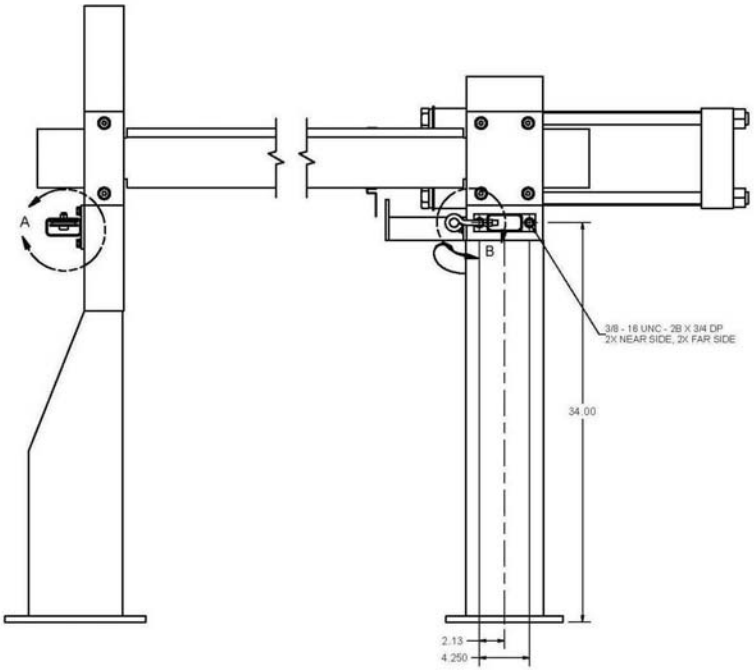

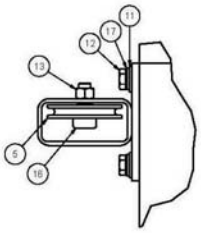

DETAIL A
SCALE 1 / 2

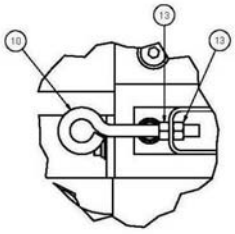

DETAIL B
SCALE 1 / 2

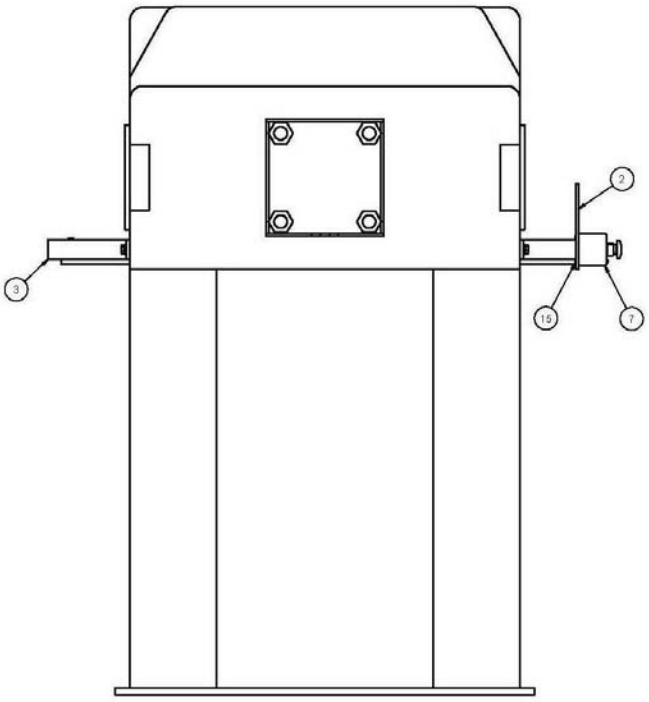

ITEM	QTY	P/N	DESCRIPTION	SIZE	MATERIAL
17	8	SLW-Z3/8	Split Lock Washer	3/8	Default
16	2	SHSH-A1/2-3/8C.50	Socket Head Shoulder Bolt	1/2 X 1/2, 3/8 - 16	Default
15	4	SHCS-Z10F.50	Socket Head Cap Screw	10 - 32 X 1/2	Default
14	1	QS3487	Sticker, (E-Stop Pull Cable)		
13	4	HN-Z3/8CG5	Hex Nut	3/8	Default
12	8	HCS-Z3/8C1.00G5	Hex Head Cap Screw	3/8 - 16 X 1	Default
11	8	FWS-Z3/8G5	Washer, SAE	3/8	Default
10	1	9489T34	Eye Bolt	3/8 - 16 X 3	Default
9	2	9914T13	Thimble, Cable Clamp		
8	AR	9912T36-R	Cable, Red		
7	1	620026	Rope & Push Button Actuated E-Stop		
6	2	3986T2	Clamp Sleeve		
5	2	350028	Pulley Wheel		Nylon
4	1	320568	E-Stop Cable Support Bracket (Tail)		Welded Steel Mild
3	1	320567	E-Stop Cable Support Bracket (Head)		Welded Steel Mild
2	1	320566	E-Stop Cable Support Bracket (Head)		Welded Steel Mild
1	1	320423	E-Stop Cable Support Bracket (Tail)		Welded Steel Mild

UNLESS OTHERWISE SPECIFIED
TOLERANCES
FRACTIONS(NON-MACHINED)
OVER 2 FT ± 1/8
UNDER 2 FT ± 1/16
MACHINED .0 ± .050
MACHINED .00 ± .020
MACHINED .000 ± .010
ANGLES ± 1 DEG
ALL DIMENSIONS ARE IN INCHES
FILLET RADII .015 TO .030
BREAK ALL CORNERS .015 MAX.
MACHINED PARALLELISM & SQUARENESS .001/FT

DRAWN luis gonzalez 5/21/2003
CHECKED
MFG
APPROVED

PACIFIC PRESS CO.
2418 CYPRESS WAY
FULLERTON, CA 92831
(714) 526-0630 FAX (714) 526-3664

TITLE
E-Stop Assembly, 630 HPSB

SIZE D | DWG NO 310093 | REV A
SCALE: 3 /16 | DO NOT SCALE DRAWING | SHEET 1 OF 1

140017C - Quick stop operation manual.indd 11 10/7/2010 9:11:29 AM

1200 mm Filter Press Drawing

A	PROCESS INLET Ø4" CLASS 150
B	CORE BLOW Ø4" CLASS 150
C	PROCESS OUTLET Ø4" CLASS 150
D	460 VAC/ 3 PHASE / 60 Hz 15 FULL LOAD AMPS
E	COMPRESSED AIR P.O.C. Ø3/4 NPT 110 SCFM @ 60 PSI
G	DRAIN Ø3" FNPT
H	WATER SQUEEZE INLET Ø1 1/2" NPT

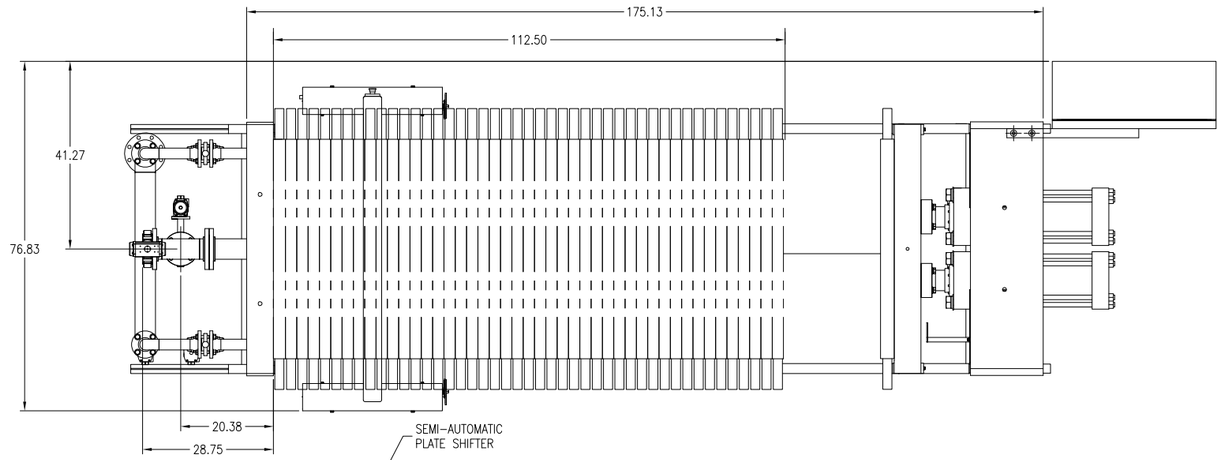

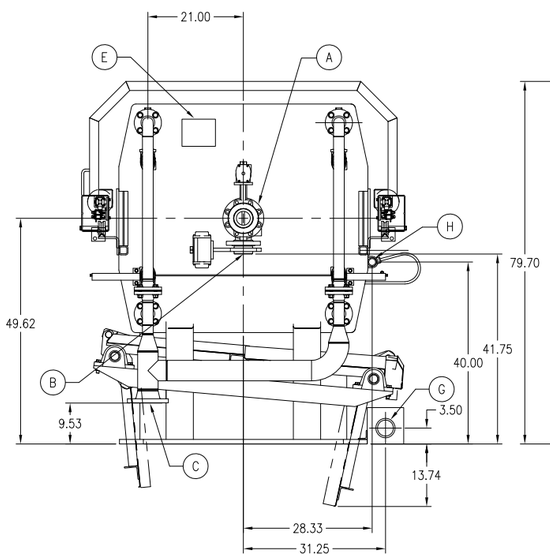

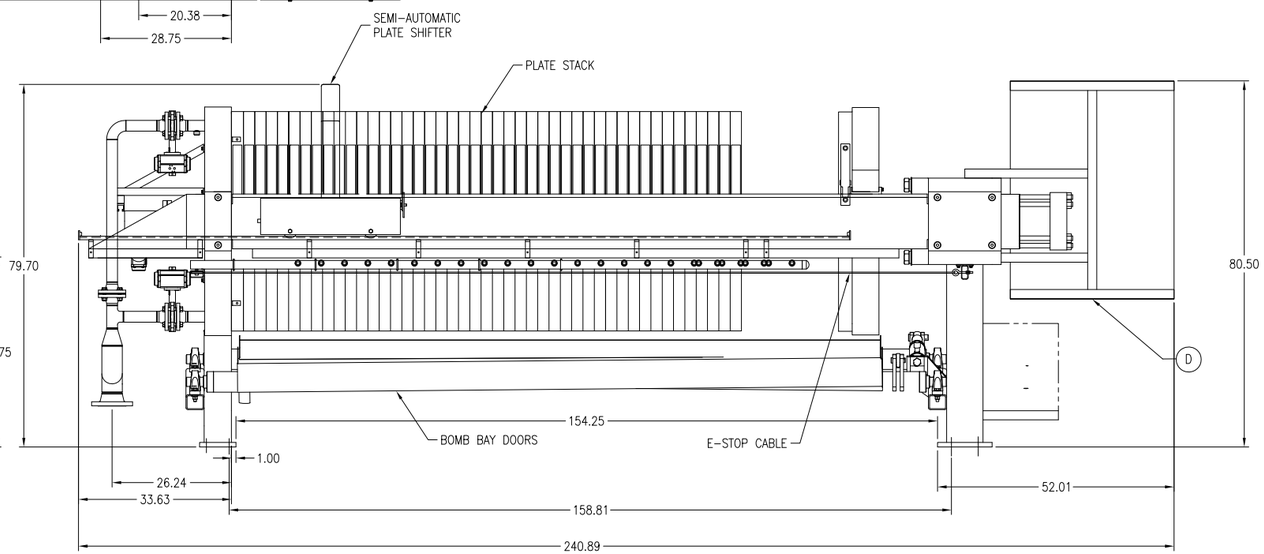

PRESS SIZE	50 cu.ft.
PLATES	41
PLATE SIZE	32 mm
FRAME	A36 STEEL
COREBLOW PIPING	TBD
DISCHARGE PIPING	TBD
FILTER AREA	1068 sq.ft.
DRY WEIGHT	24,883 lbs
OPERATING WEIGHT	29.133 lbs
CAKE DENSITY	85 lbs/cuft

INCLUDED OPTIONS
SEMI-AUTOMATIC PLATE SHIFTER
SAFETY CORD
BOMB BAY DOORS

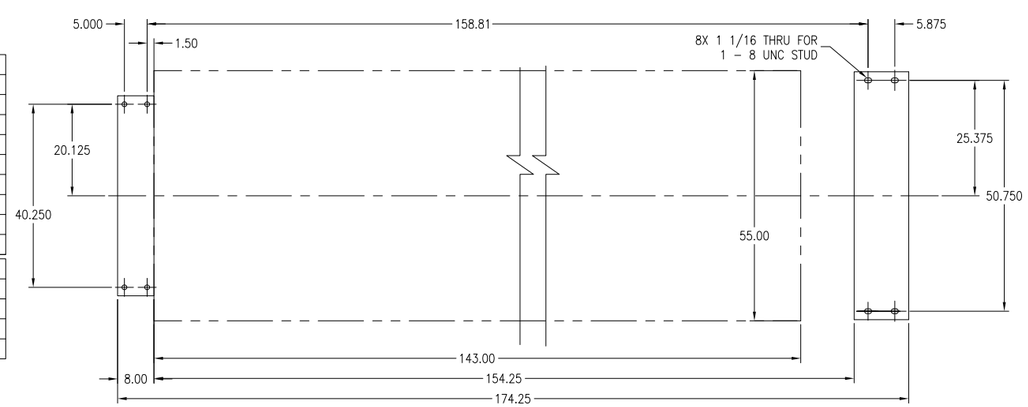

REVISIONS				
REV.	DESCRIPTION	BY	DATE	APPR.
A	Released	GM	4/1/10	-
B	Revised title in title block	GM	4/1/10	-

PRELIMINARY REFERENCE ONLY.
NOTE: ALL DATA AND OR DIMENSIONS ARE PRELIMINARY AND ARE NOT VALID FOR PRODUCTION.

UNLESS OTHERWISE SPECIFIED TOLERANCES FRACTIONS(NON-MACHINED) OVER 2 FT. ± 1/8 UNDER 2 FT. ± 1/16 MACHINED .0 ± .050 MACHINED .00 ± .030 MACHINED .000 ± .010 ANGLES ± 1 DEG. ALL DIMENSIONS ARE IN INCHES FILLET RADII .015 TO .030 BREAK ALL CORNERS .015 MAX. MACHINED PARALLELISM & SQUARENESS .001/FT	DRAWN G.McGinnis CHECKED - QA - MFG - APPROVED -	DATE 4/1/10 - - - -

PACIFIC PRESS CO.
714 525-0630 FAX 525-2664

TITLE
1200 HPSB, 50 cuft, 32mm, NGR, Membrane
P12M232A-50

SIZE	DWG NO	REV
D	255039	B

SCALE 1/16 SHEET 1 OF 2

1400 15C-Automatic Plate Shifter Operations & Maintenance Supplement

PacPRESS
PACIFIC PRESS COMPANY
2418 Cypress Way • Fullerton, CA 92831
714.525.0630 • 800.878.8029 • fax.714.525.2664
www.pacpress.com

AUTOMATIC PLATE SHIFTER

OPERATIONS &

MAINTENANCE SUPPLEMENT

1.0 TABLE OF CONTENTS

1.0 Table of Contents 2

2.0 General Information 3

3.0 Safety Notice 4

4.0 Receiving and Installation 5

5.0 Operation 6

6.0 Maintenance and Troubleshooting 8

7.0 Specifications 9

2.0 GENERAL INFORMATION

1- This manual contains general procedures that apply to plate shifters.

2- Be sure to read and understand the safety notice statements in this supplement.

3- For your safety do not install, operate or attempt maintenance procedures until you understand the warning and caution statements.

4- A warning statement indicates a possible unsafe condition that can cause personnel harm.

5- A caution statement indicates a condition that can cause damage to the equipment.

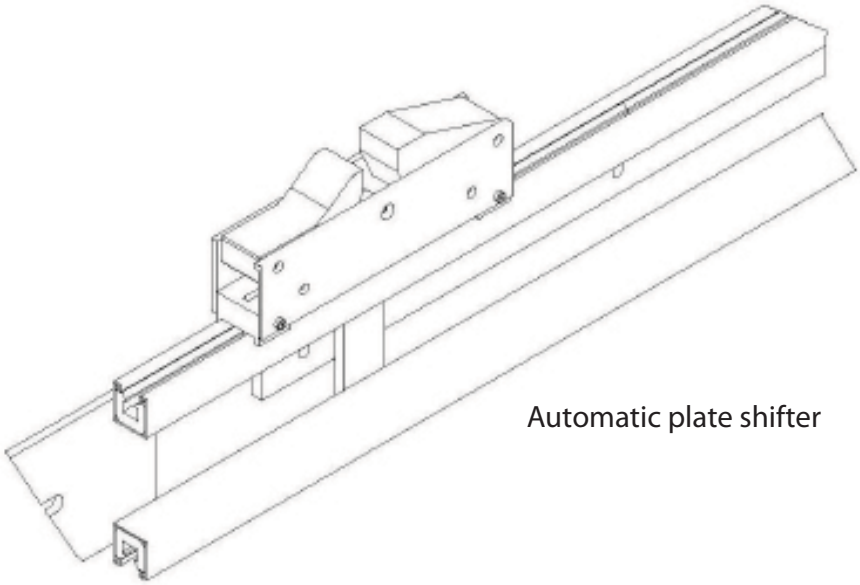

Automatic plate shifter

3.0 SAFETY NOTICE

1- Warning : Use lock out, tag out procedures, do not touch electrical connections before you first ensure that power has been disconnected. Electrical shock can cause serious or fatal injury. Only qualified electrical personnel should attempt the installation, operation and maintenance of this equipment.

2- Warning : Be sure the system is properly grounded before applying power. Do not apply AC power before you ensure that national and local electrical codes for the grounding of equipment are carefully followed.

3- Warning : This equipment may be connected to, or controlling other equipment that has rotating parts or parts that are driven by this equipment. Improper use can cause serious or fatal injury. Only qualified personnel should attempt to install, operate or maintain this equipment.

4- Warning : Do not bypass or disable safety devices or guards. They are designed to prevent damage to personnel or equipment. These devices can only provide protection if they remain in place and operative.

5- Warning : The operation of the plate shifter creates pinch points, do not rest hands on any part of the equipment while operating.

6- Warning : Plate Shifter is driven by a chain drive, do not attempt maintenance without first removing energy supply.

7- Warning : Always wear eye protection when operating Plate Shifter.

8- Caution : To prevent premature equipment failure or damage, only authorized maintenance personnel should perform maintenance.

9- Caution : Failure to clean solids from plate surfaces can severely damage plates.

10- Caution : Do not attempt to lift the Press by attaching to the plate shifter.

11- Caution : Please ensure that chain rails are kept clean and free from debris.

4.0 RECEIVING AND INSTALLATION

Each plate shifter is carefully adjusted and tested in the factory prior to shipping. When you receive your plate shifter you should:

1- Observe the condition of the plate shifter and report any damage immediately to the carrier that delivered the equipment.

2- If the plate shifter will not be put in service immediately it must be stored in a clean, dry and warm location.

3- Remove any shipping strapping from plate shifter.

4- The plate shifter is operated by and electric motor mounted on the tail of the press so no utility hookup is required.

5.0 OPERATION

The plate shifter is driven by a ¾ HP motor mounted to the tail end of the press (Figure 5.1) and has two shuttle mechanisms mounted on each side of the press (Figure 5.2).

FIGURE 5.1

FIGURE 5.2

The reversing motion of the plate shifter is derived from a throw out clutch that activates a proximity sensor. The signal from the sensor is read through the PLC and causes a reversing contactor to engage. The plate shifter shuttle levers are sprung so that they engage on the plates (Figure 5.3).

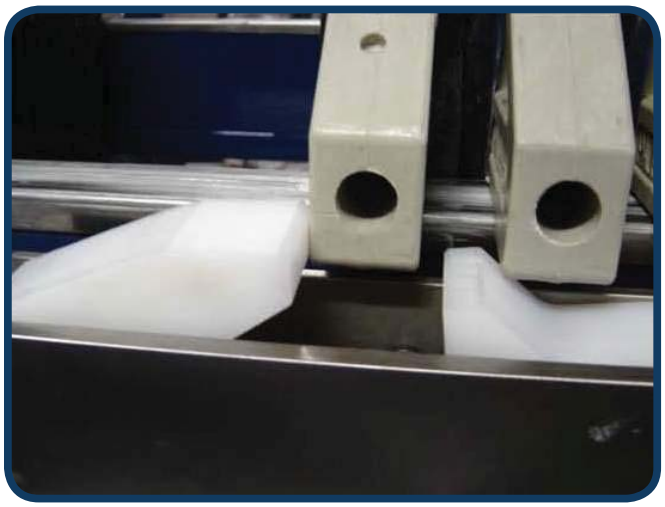

FIGURE 5.3

5.0 OPERATION

When the shuttles jam, the clutch sensor reverses the motor, and the shuttle moves in the other direction until it jams again. At the end of the plate shifting sequence, the shuttles head end lever is locked down so that the shuttles can return home. There is a plate shifter home sensor that, when activated allows the PLC to know the position of the shuttles. When the shuttles arrive home a pin releases the head end levers and they return to the ready position.

The plate shifter is stored at the tail end of the press when not in use (Figure 5.4).
The automatic plate shifter is activated by pressing the START PLATE SHIFT CYCLE button on the operator interface (Figure 5.5).

FIGURE 5.4

FIGURE 5.5

NOTE: The plate shifter will not start unless the filter press is in the open position.

The plate shifter will search for the first gap in the plates and align itself once activated. It will return to the home position when the entire filter plate stack has been shifted.

To stop the plate shifter at any time, pull the stop cord. To restart the plate shifter, reset the stop cord and press the START PLATE SHIFT CYCLE button on the operator interface.

6.0 MAINTENANCE AND TROUBLESHOOTING

Inspect plate shifter at regular intervals, every six months at minimum.

Check that interior and exterior are clean and free from debris.

Check all gears and shaft connections and make sure set screws are tight.

Check reduction gearbox to ensure the oil level is to middle of the sight glass.

Check support rail mounting bolts and all other fasteners and make sure they are secure.
The drive chain requires no lubrication.
The bearings are sealed type and do not require lubrication.
Check alignment, if incorrectly aligned make sure support rail is level.
Remove front cover and inspect tensioner and levers for wear.
If the shuttles become out of alignment, loosen the pin bearing mounting gears at each end of the drive chain, and align the shuttles. Retighten the lock screws on the pin bearing mounting gears.
If either chain becomes loose, the pin bearing mounting bolts can be moved horizontally to tighten, as they are in slotted holes. Loosen the lock nut on the back side of the pin and move the gears to tighten the drive chain; then retighten the lock nuts. Ensure that the release pins on both shuttles are engaged when the shuttles are in the home position, after moving the pin bearing gear mounting bolts (the small pin protruding from the tail end of the shuttles that engage on white plastic blocks mounted at the tail end of the plate shifter rails).

7.0 SPECIFICATIONS

Materials : Completely factory assembled.

Drive : All electrically operated, movement is all mechanical.

Reduction is 250:1.

Motor ¾ HP TEFP

1400 17B- E-Stop Operation Rapid Stop Switch Push-Pull Cable

PACIFIC PRESS COMPANY

2418 Cypress Way • Fullerton, CA 92831
714.525.0630 • 800.878.8029 • fax.714.525.2664
www.pacpress.com

E-STOP OPERATION
RAPID STOP SWITCH/PUSH-PULL CABLE

1.0 TABLE OF CONTENTS

1.0 Table of contents 2

2.0 E-stop operation 3
- 2.1 General Information 3
- 2.2 Safety Notice 3
- 2.3 Operation 3
- 2.4 Maintenance and Troubleshooting. 3
- 2.5 Specifications 3

Note: These instructions are intended for use by qualified personnel for instruction and maintenance purposes. Reproduction in whole or in part in not permitted without the express written permission of Pacific Press Company.

2.0 E-STOP OPERATION

2.1. General Information

The ES-1 Series is a wire cable and push button activated emergency stop device, that encompasses the filter plate area of the press.
630 series and larger filter presses are equipped with a stop cord.
A latching mechanism maintains the OFF state of the safety contacts after the button is pushed or the red cable is pulled (FIGURE 1).The press cannot be restarted until the latch (on the pneumatic model) or the push button (on the electric model) is reset. Reactive the filter press by putting the selector on the "RUN POSITION" on the emergency stop (FIGURE 2)
The electric model utilizes a three way switch that closes when the cable is pulled or if the cable is broken. Special attention should be paid during installation of the press that the indicator on the switch is in the middle position when the press is open. This is set in the factory but may have changed during shipping. Simply turn the wire coil nut clockwise with a wrench to adjust.
On the pneumatic model the unit is reset by turning the reset knob to the run position. The unit provides an emergency stop facility around the circumference of the filter press. Emergency rope pull switches meet OSHA push/pull operating requirements.

2.2. Safety Notice

Warning: Because the E-Stop device is not likely to be operated frequently, it is recommended that its function is checked, on a regular basis (start of shift or daily) to ensure proper operation.

2.3. Operation

When the stop cord is pulled, the blue selector on the emergency box goes to the "OFF POSITION". Reactivate the filter press by putting the selector on the "RUN POSITION" on the emergency stop.
Before, allowing normal machine use by an operator, check that when the rope is pulled the machine operation is halted and that the reset mechanism is latched.
After activation and before resetting, the press should be inspected along the entire length of the cable in order to detect the reason for activation.

2.4. Maintenance and Troubleshooting

1- Every Week : Inspect the switch, casing and cable for damage. Pay special attention to loss of seal on the lid and damage to the rope and pulleys. Replace where necessary. Check for correct tension in the cable and correct operation of the switch. Ensure correct operation of the E-Stop.

2- Biannually : Isolate all power, remove the lid and inspect all terminals for tightness, check fitting of tubing on pneumatic model. Check tightness of screws on contact block. Clean out any accumulation of dust or dirt.

2.5. Specifications

- NEMA 4 enclosure enables the switch to withstand water wash down.
- NC contacts ensure interruption of safety circuit upon pull-actuation.
- Pull/push (slack or broken cable) operation meets OSHA requirements.

2.0 E-STOP OPERATION

- Adjustable tension force.
- Meets CE, IEC, VDE, BG requirements. UL recognized & CSA – listed.
- ES-1E Rated at up to 16A .
- Long life : the switch is designed for a minimum of one million actuations.

FIGURE 1

"OFF POSITION"

"RUN POSITION"

FIGURE 2

1400 18B- Bombay Doors Manual

PACIFIC PRESS COMPANY

2418 Cypress Way • Fullerton, CA 92831
714.525.0630 • 800.878.8029 • fax.714.525.2664
www.pacpress.com

BOMBAY DOORS MANUAL

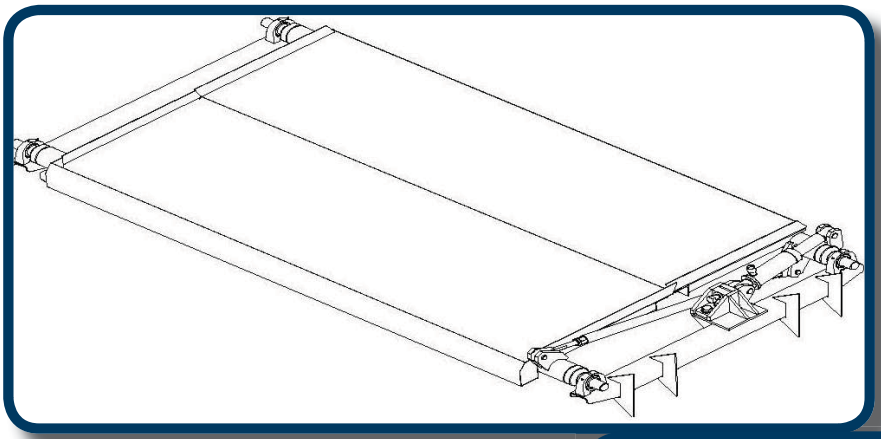

1.0 TABLE OF CONTENTS

1.0 Table of Contents 2

2.0 Bombay doors 3

2.1 General Information..... 3

2.2 Safety Notice..... 4

2.3 Receiving and Installation..... 4

2.4 Operating.....4

2.5 Maintenance and Troubleshooting..... 4

3.0 Drawing.....5

Note: These instructions are intended for use by qualified personnel for instruction and maintenance purposes. Reproduction in whole or in part in not permitted without the express written permission of Pacific Press Company.

2.0 BOMBAY DOORS

2.1. General information

A Bombay door is used in conjunction with non-gasketed filter presses to catch any fluid "wicking" from the filter cloths. Unlike gasketed plates, non-gasketed filter plates do not offer a positive seal; therefore there may be drippage from the plates. This dripping is caught in a tray called a "Bombay door" which is piped to return any fluid back into the system. The Bombay door tray is constructed of stainless steel, but can also be plastic or fiberglass. The frame is usually steel. A hydraulic cylinder mounted on one side and activating both doors via a linkage arm is used to open and close the Bombay doors. The normal position of the Bombay doors is closed, with the doors up, underneath the filter plates. The Bombay doors remain in this position for the duration of the filter press cycle.

Once the filter press cycle is complete, the Bombay doors must be opened to discharge the cake. First, note that there are two possible operation locations for the doors. If the press PLC has no control panel, the first location is thru a manual switch that is located on the control box for the electric hydraulics. The second is accessible through the touch screen in the operator interface (if applicable). With the Bombay doors open, the filter cake can discharge freely from the filter plates. Once cake discharging and cleaning is complete, closing the Bombay doors will re-position the Bombay doors underneath the filter press. The press is now ready for the next press cycle.

The Bombay doors may be closed for washing the filter plates. In order to accomplish this the press follower must be closed, the doors will also close and then the follower is to be retracted. The bombay doors will stay closed.

FIGURE 1- Bombay doors are closed

FIGURE 2- Bombay doors are opened

2.0 BOMBAY DOORS

2.2. Safety notice

1. Warning: The Bombay doors are operated hydraulically, do not attempt to service doors without first ensuring, hydraulic pressure is removed from system, and power is off at the press.
2. Warning: The Bombay doors are not designed to bear any weight beyond the normal operating weight.
3. Warning: The Bombay doors are hydraulically operated, keep clear of operating parts as it could result in serious injury.
4. Warning: Never place any part of your body between the bombay doors, this could lead to serious injury.
5. Warning: Never stand on the bombay doors, they are not designed as a platform and inadvertent opening of the doors could cause personnel to fall.
6- Warning: The Bombay doors are not a step and should never be used as a human support to change cloth or other press maintenance.

FIGURE 3 - Bearings

2.3. Receiving and Installation

The Bombay doors ship assembled to the filter press.
When the Bombay doors arrives, you should observe the condition of the doors and report any damage immediately to the carrier that delivered the equipment.

No assembly is required for optional Bombay doors.

2.4. Operation

Ensure all bolts are tight.
Normal automatic operation of the bomb bay doors will close the doors when the press is closed and the hydraulic system builds pressure, and open the doors when the hydraulic pressure is released from the system. During the opening sequence the doors opening is delayed for 1 minute to allow drainage of filtrate that has not been purged from the plate pack.

2.5. Maintenance and Troubleshooting

The hydraulic cylinders should be inspected monthly to ensure that the rod is clean and lubricated. The bearings on each side of the Bombay doors are to be kept greased. Lack of lubrication may cause the doors to bind up. There is a safety interlock that prevents the press from opening with the doors open.

Biannual- Check tightness of all bolts and nuts and that all handrails are securely in place.

3.0 DRAWING

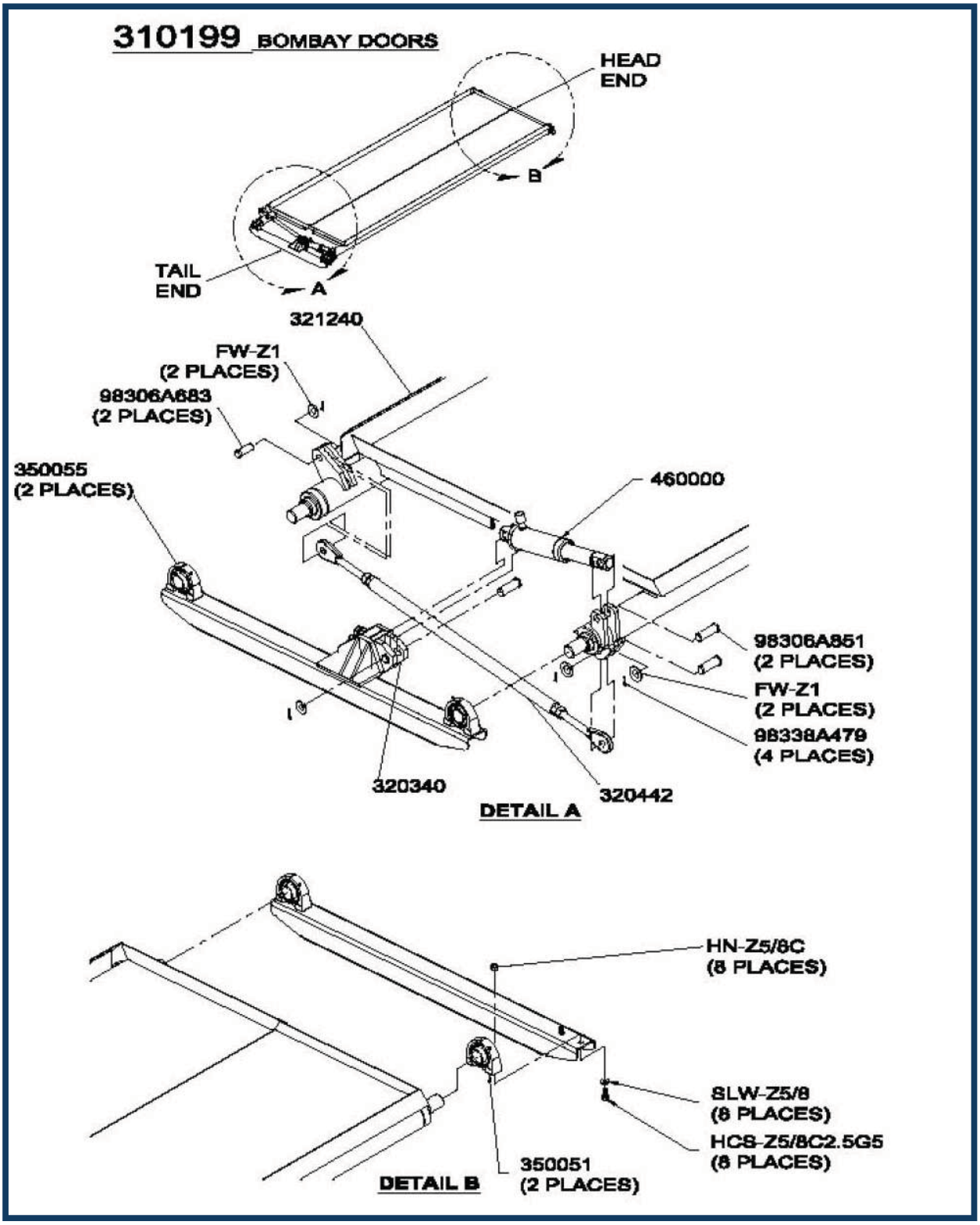
310199 BOMBAY DOORS
HEAD END
B
TAIL END
A
321240
FW-Z1 (2 PLACES)
98306A683 (2 PLACES)
350055 (2 PLACES)
460000
98306A851 (2 PLACES)
FW-Z1 (2 PLACES)
98338A479 (4 PLACES)
320340
320442
DETAIL A
HN-Z5/8C (8 PLACES)
SLW-Z5/8 (8 PLACES)
HCS-Z5/8C2.5G5 (8 PLACES)
350051 (2 PLACES)
DETAIL B

140040B- Light Curtain System Manual

PACIFIC PRESS COMPANY

2418 Cypress Way • Fullerton, CA 92831
714.525.0630 • 800.878.8029 • fax.714.525.2664
www.pacpress.com

LIGHT CURTAIN SYSTEM MANUAL

1.0 TABLE OF CONTENTS

1.0 Table of contents 2

2.0 Light Curtain 3
- 2.1 Safety Notice 3
- 2.2 General Information 3
- 2.3 Operating States 3
- 2.4 Operating Modes 3
- 2.5 Maintenance and Troubleshooting 4
- 2.6 Cleaning 4

Note: These instructions are intended for use by qualified personnel for instruction and maintenance purposes. Reproduction in whole or in part in not permitted without the express written permission of Pacific Press Company.

2.0 LIGHT CURTAIN

2.1. Safety Notice

Read and understand this section prior to using the equipment.
The primary function of the light curtain is to act as a switch to interrupt the cycle if "broken". It is not intended to be used as a safety device.
A light surtain system is a general purpose presence sensing device designed to guard personnel working around moving machinery. The proper application, maintenance and operation of the light curtain system is the responsibility of the employer. The employer is responsible for the selection and training of personnel to properly operate and maintain the machine and its safeguarding systems.
A light curtain system should only be maintained by a qualified person.
Severe smoke, particulate matter and corrosives may degrade the efficiency of a safety light curtain. Do not use the light curtain system in this type of environment.
Perform the test procedure after maintenance, adjustment, repair or modification to the machine controls, tooling, dies or machine, or the light curtain system. Perform only the test and repair procedures outlined in the manual.
Follow all procedures in the light curtain instructions for proper operation of the light curtain system.
All applicable governmental and local rules, codes, and regulations must be satisfied. This is the employer's responsibility. The employer has the sole responsibility to follow the preceding requirements and any other procedures, conditions and requirements specific to the machinery.
Warning: Because the light curtain system is not likely to be operated frequently, it is recommended that its function is checked, on a regular basis (start of shift or daily) to ensure proper operation.

2.2. General Information

A light curtain system is a microprocessor-controlled, infrared transmitted-beam safety light curtain. The system consists of a receiver assembly and a transmitter assembly. The receiver and transmitter assemblies are not physically interconnected. The light curtain system is used where personnel protection is required.

2.3. Operating States

LIGHT CURTAIN FAULT: The two receiver safety outputs are in the OFF state, the red machine stop indicator is lit, the yellow interlock indicator is flashing, and the auxiliary output is in the OFF state. The alarm state does not allow the protected machine to operate. The primary difference between alarm and interlock is that the light curtain system will remain in the alarm state until the alarm is corrected, regardless of power cycling or an external start button press and release.

2.4. Operating Modes

System operating modes determine the start-up and operating behavior of a light curtain system. Operating mode definitions rely on the operating states presented above. Operating mode selection is performed via configuration switches in the removable cap on the bottom of the receiver.

AUTOMATIC START: A light curtain system will power-up with its safety and auxiliary outputs OFF, and, if the detection zone is not obstructed, enter the machine run state. In this state, when an object is sensed entering the detection zone, the light curtain system will change from machine run to machine stop and remain in this state until the obstruction is removed.

2.0 LIGHT CURTAIN

Once the detection zone is clear, the light curtain system will have to be cleaned at the HMI main screen. Light curtain stops the filter press except during the feed cycle because the feed cycle doesn't have the moving parts.
There is only one way to clean the light curtain button is by pushing the reset button on the main screen.

2.5. Maintenance and Troubleshooting

WARNING: Never operate the light curtain before carrying out the following inspection. Improper inspection can lead to serious or even deadly injury.
NOTE:
1.For safety reasons all inspection results should be recorded.
2.Only persons who clearly understand the functioning of the light curtain and of the machine, may carry out an inspection.
3.Make sure that the user has sufficient information available to carry out the inspection.

Daily inspection:
1.Approach to hazardous machine parts must only be possible through passage through the protective field of light curtain system.
2.Operators cannot step through the sensing area while working on dangerous machine parts.
3.The safety distance of the application is bigger than the calculated value.
4. The optic front cover is neither scratched nor dirty.Operate the machine and check if the hazardous movement will stop under the following circumstances.
5.The protective field is interrupted.
6.Hazardous machine movement stops immediately, if the protective field is interrupted by the test rod directly in front of the transmitter, directly in front of the receiver and in the middle between transmitter and receiver.
7.No hazardous machine movement while the test rod is anywhere within the protective field.
8.The power supply of the light curtain is turned off.

IMPORTANT: If any of the above conditions do not result in the hazardous motion of the machine ceasing, do not allow the protected machine to be placed in operation.

Six-Month inspection:
Check the following items every six months or whenever a machine setting was changed.
1.Machine stops or does not obstruct any safety function.
2.The latest machine or connection modifications have no effect on the control system.
3.The outputs of the light curtain system are properly connected to the machine.
4.The total response time of the machine is shorter than the calculated value.
5.Cables and plugs of the light curtain system are in flawless condition.
6.Mounting brackets, caps and cables are tightly secured.

2.6. Cleaning

If the optic front cover of the light curtain system is dirty, the outputs of the light curtain system turn off. Take a clean, soft cloth and rub without pressure. Do not apply aggressive, abrasive or scratching cleansing agents, which might attack the surface.

140122B- Electric Hydraulic Manual

PACIFIC PRESS COMPANY

2418 Cypress Way • Fullerton, CA 92831
714.525.0630 • 800.878.8029 • fax.714.525.2664
www.pacpress.com

ELECTRIC HYDRAULIC MANUAL

Photo # 132197

140122B-Electric Hydraulic.indd 1 12/8/2010 3:46:25 PM

1.0 TABLE OF CONTENTS

1.0 Table of contents 2

2.0 Receiving and Installation 3

3.0 Safe operation 4

4.0 Component identification 5

5.0 Hydraulic pack location 7

6.0 Operation 8

- 6.1 Operational description of hydraulic closure 9
- 6.2 Opening the press 10
- 6.3 Bombay doors 11
- 6.4 Electric hydraulic assembly drawing 12
- 6.5 Hydraulic diagram - 800, 1000, 1200 mm filter presses 13
- 6.6 Hydraulic diagram - 1500 mm filter pres 14

7.0 Hydraulic cylinder 15

8.0 Maintenance and Troubleshooting 16

- 8.1 Maintenance 16
- 8.2 Troubleshooting 16

Note: **These instructions are intended for use by qualified personnel for instruction and maintenance purposes. Reproduction in whole or in part in not permitted without the express written permission of Pacific Press Company.**

2.0 RECEIVING AND INSTALLATION

Each hydraulic system is carefully adjusted and tested in the factory prior to shipping.

When you receive your hydraulic system, you should:

1- Observe the condition and report any damage immediately to the carrier that delivered the equipment.

2-Check for hydraulic leaks and that the fluid level is correct.

3- If the equipment will not be put in service immediately it must be stored in a clean, dry and warm location. It is also recommended that the hydraulic tank must be drained due to moisture condensing in the tank.

If any visible damage has occurred notify the trucking company immediately as you will have to make a claim with them. It is best to make a notation on the freight bill of any damage, point out the damage to the truck driver and have the truck driver make a notation as to the damages.

3.0 SAFE OPERATION

Be sure to read and understand the safe operation in this manual. For your safety do not install, operate or attempt maintenance procedures until you understand the warning statements. A warning statement indicates a possible unsafe condition that can cause personnel harm.

1. Warning: Always first read this manual before installation, start-up, operation and maintenance.

2. Warning: Only trained, authorized personnel should operate, start-up or maintain the hydraulic system.

3. Warning: The hydraulic system maintains a pressure of above 3000 psi. Be sure that the hydraulic pressure is de-energized before attempting maintenance on the system.

4. Warning: Always wear eye protection when operating hydraulic system. A line may break and spray hydraulic fluid in your eyes.

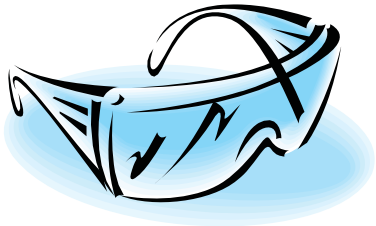

140122B-Electric Hydraulic.indd 4 12/8/2010 3:46:54 PM

4.0 COMPONENT IDENTIFICATION

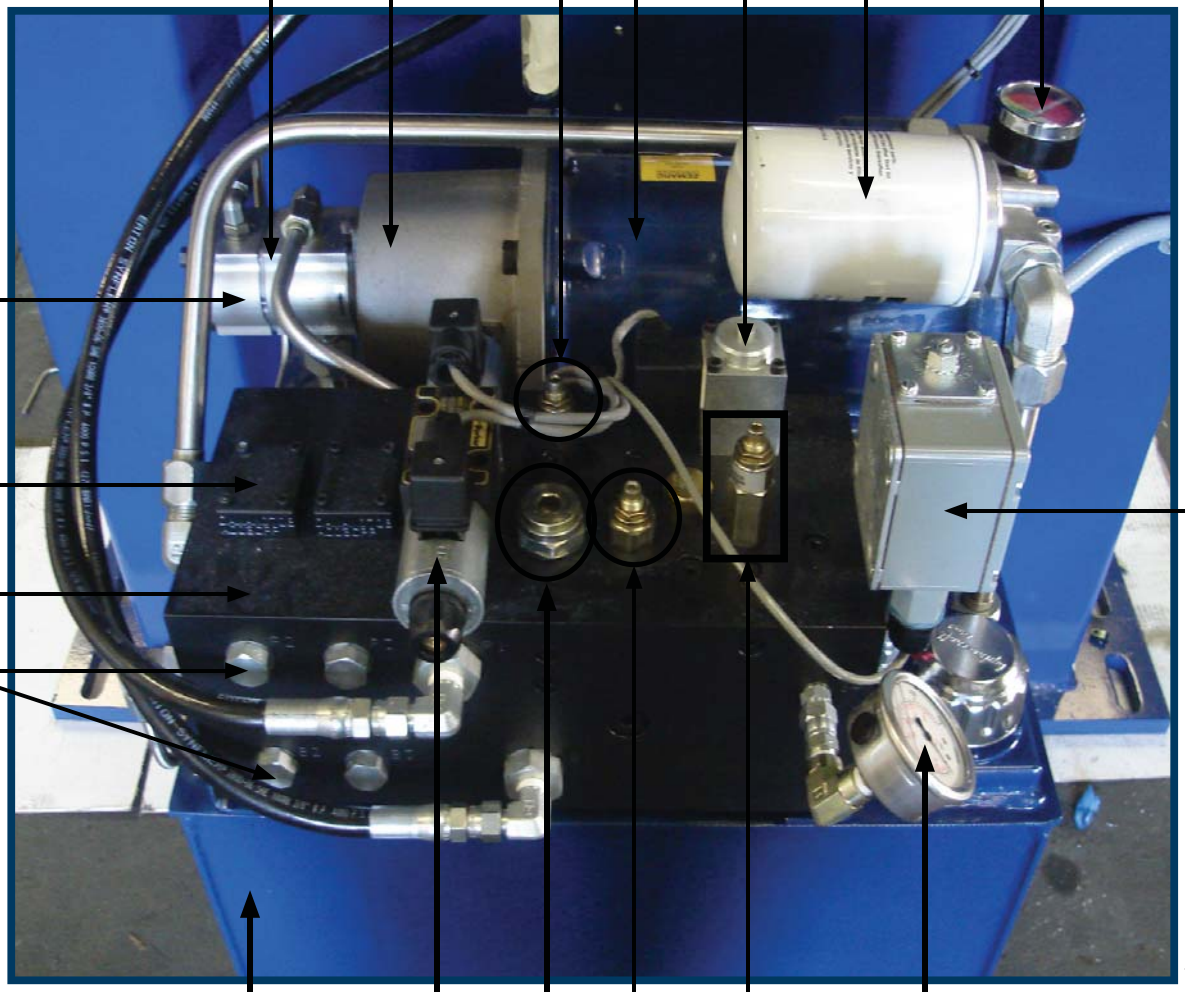

Note: **The pictoral is for illustration purposes only. This is the universal design and your unit may differ.**

140122B-Electric Hydraulic.indd 5 12/8/2010 3:46:54 PM

4.0 COMPONENT IDENTIFICATION

1-Pressure relief valve
The pressure relief valve controls the over pressurization and is adjusted to a predetermined pressure.

2-Pressure release valve
The pressure release valve is designed to rapidly release the pressure of the system in order to open the hydraulic closure of the filter press.

3-Electric motor
This motor powers the hydraulic pumps to create the hydraulic pressure which drives the hydraulic cylinder.

4-Oil filter
The oil filter is used to maintain clean oil in the system. The filter is located on the return side of the cylinder on the way back to the reservoir.

5-Gauge
The gauge indicates the hydraulic pressure during the closure process.

6-Pressure switch
This switch will trip an electrical contact when turning the hydraulic pump off.

7-Unloading valve
The unloading valve allows the pressure to release when the cylinder is to be retracted.

8-Directional control valve
A directional control valve allows fluid to flow to different paths from one or more sources. This valve usually consists of a piston inside a cylinder which is controlled electrically. The movement of this cylinder regulates the flow of hydraulic fluid controlling the volume in a specific direction.

9-Hydraulic reservoir
The hydraulic reservoir is the storage where the hydraulic fluid resides in the cylinder. The volume of the reservoir depends on the filter press size. The reservoir is filled with prefiltered fluid to the full mark on the level gauge.

10-Check valve
This valve allows a pressurized hydraulic line to remain pressurized. The check valve normally allows flow in one direction and blocks flow the opposite direction. A check valve is used in any line where back flow is not acceptable.

11-Hydraulic manifold distribution block
The manifold is the distribution block supports the different types of valves and hydraulic hardware. The distribution block is the centralized point where hydraulic oil can perform all functions required.

12-Hydraulic low pressure pump
This pump is used for low pressure and high volume. This hydraulic pump allows the cylinder to close rapidly.

13-Hydraulic high pressure pump
This pump used for high pressure and low volume is the final stage before the maximum pressure is reached in the closure cycle.

14-Ports
The ports are located in the hydraulic manifold and provide a passageway for fluid (air or hydraulic fluid) to flow to or from other components.

140122B-Electric Hydraulic.indd 6 12/8/2010 3:46:57 PM

5.0 HYDRAULIC PACK LOCATION

The electric hydraulic power pack is designed for years of reliable operation. The electric hydraulic power pack is used for the pressurization of the cylinder which opens or closes the filter press and/or the bombay doors.
The position of your hydraulic system can be different according the configuration of your filter press :
-Top mounted : the hydraulic system is positioned at the top of the cylinder. (Figure 5.1)
-Standard mounted : the hydraulic system is below the cylinder. (Figures 5.2 & 5.3)

HYDRAULIC PACK LOCATION

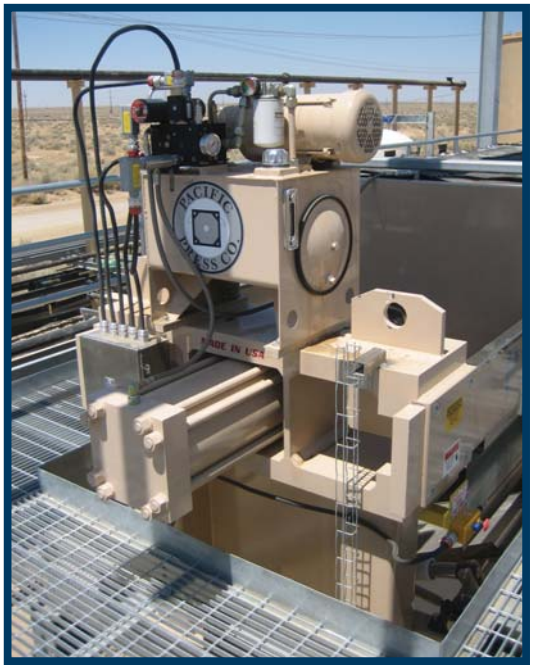

Photo # 132268

Figure 5.1- Top mounted

Photo # 132091

Figure 5.2-Overhead below the cylinder

Photo # 132198

Figure 5.3-Standard mounted

140122B-Electric Hydraulic.indd 7 12/8/2010 3:46:57 PM

6.0 CONTROLS

To open or close your filter press, you need to extend or retract your cylinder by using a control panel. There are two types of hydraulic controls. The first is a manually operated switch that is mechanically turned in the direction that you would like the cylinder to operate (Figure 6.1a). The second is a PLC touch screen that is used to perform the same function (Figure 6.2a).

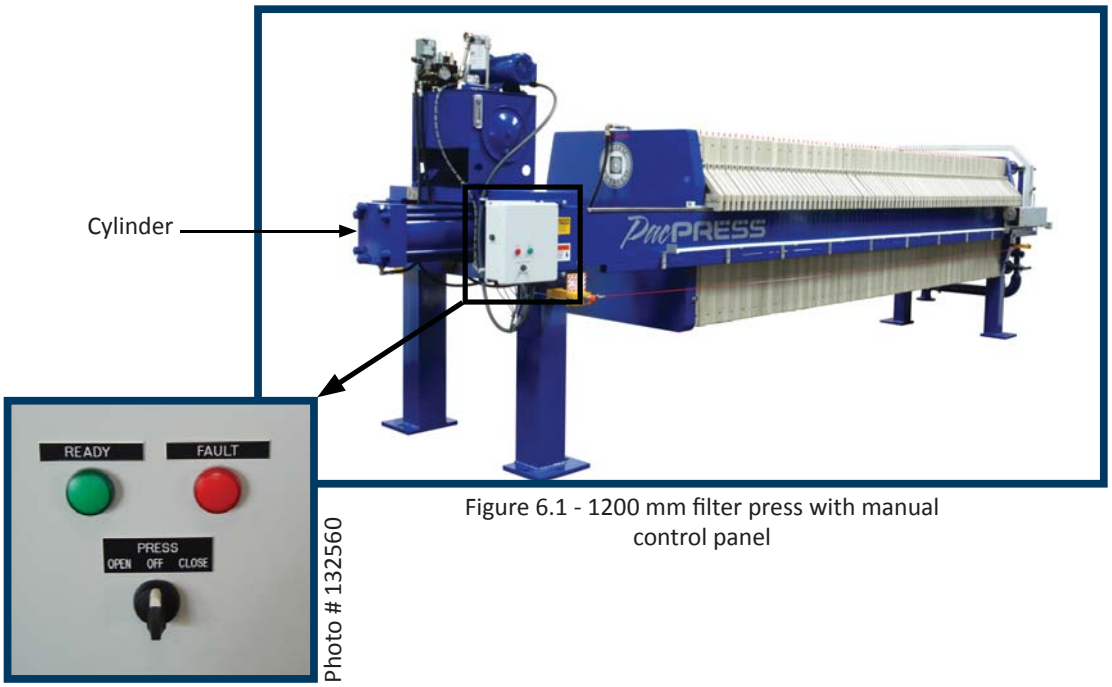

Photo # 132210

Figure 6.1 - 1200 mm filter press with manual control panel

Photo # 132560

Figure 6.1a

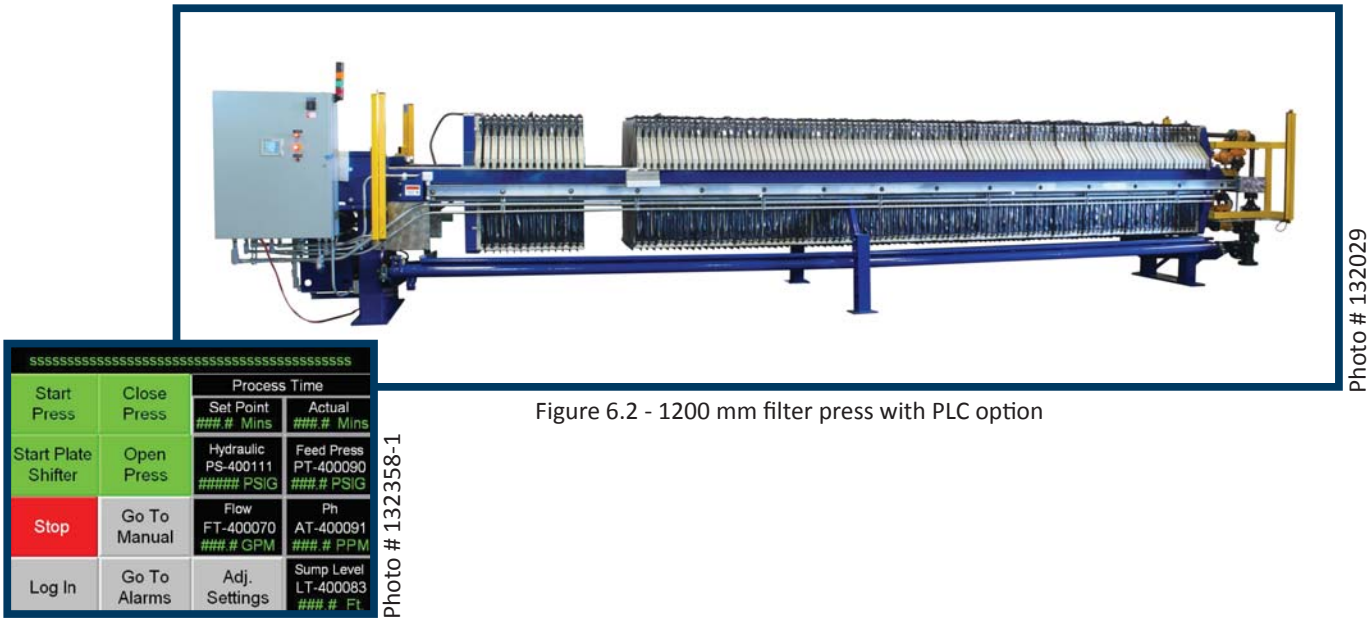

Photo # 132029

Figure 6.2 - 1200 mm filter press with PLC option

Photo # 132358-1

Figure 6.2a

140122B-Electric Hydraulic.indd 8 12/8/2010 3:47:02 PM

6.0 OPERATION

6.0- Operation description of hydraulic closure

6.1 Closing the Press- The start of the process is activated by turning on or pushing the “close press” button:

1- The electric motor will start the operation. (Figure 6.3)

2-The oil from the hydraulic reservoir (Figure 6.4) is pressurized by one or two pumps depending on the design through the pumps (Figure 6.5) . If your hydraulic system is equipped with two pumps. One pump is used for low pressure and high volume. The second pump is used for high pressure and low volume.

3-The pressurized hydraulic oil is pumped through the valve SV153 (see drawing page 13). This valve is a part of the directional control which sends the fluid to the end of the cylinder depending on the direction required. When the cylinder fills up with oil, the cylinder will extend and the filter press will close.

4- The unloading circuit for the low pressure pump brings back the over pressurized hydraulic fluid to the reservoir when the hydraulic pressure reaches 600 psi.

Photo # 132544

Figure 6.3 - Motor

Photo # 132545

Figure 6.4 - Hydraulic reservoir

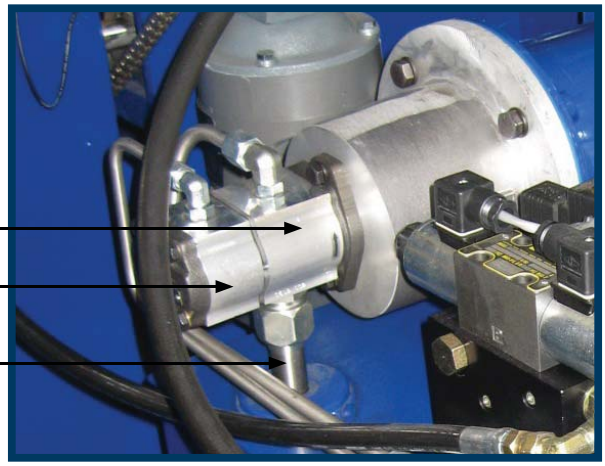

Photo # 132197-1

Figure 6.5 - Pumps

140122B-Electric Hydraulic.indd 9 12/8/2010 3:47:04 PM

6.0 OPERATION

6.2- Opening the press

Once your process is activated by turning on or pushing the “open press” button:

1- The electric motor will start the operation.

2-The oil from the hydraulic reservoir is pressurized by a pump to create pressure for opening the press.

3-The pressurized hydraulic oil is diverted through the valve SV151 (see drawing page 13). This valve is a part of the directional control. To retract the cylinder, the oil is pumped to the front side of the cylinder. At the same time, the oil from the back side of the cylinder returns to the reservoir.

4- The follower is considered open when the follower proximity sensor (Figure 6.6) is contacted and the pump stops pumping.

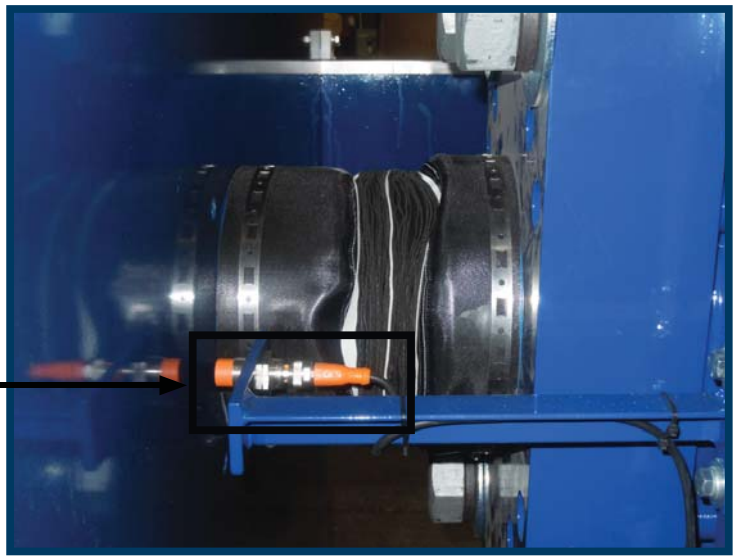

Figure 6.6

140122B-Electric Hydraulic.indd 10 12/8/2010 3:47:06 PM

6.0 OPERATION

6.3- Bombay doors

If your filter press comes with bombay doors, the hydraulic system will also be used to operate them. (Figure 6.7)

Depending on the size of the filter press the bombay doors can have a single cylinder with a linkage to operate both doors (Figure 6.8), two cylinders with two linkages or four individual cylinders. This hydraulic cylinder is hooked to the hydraulic system by using a single hose. The cylinder is a spring return design so there is only one hose.
The valve SV154 is used for operating the doors. (See drawing page 13)

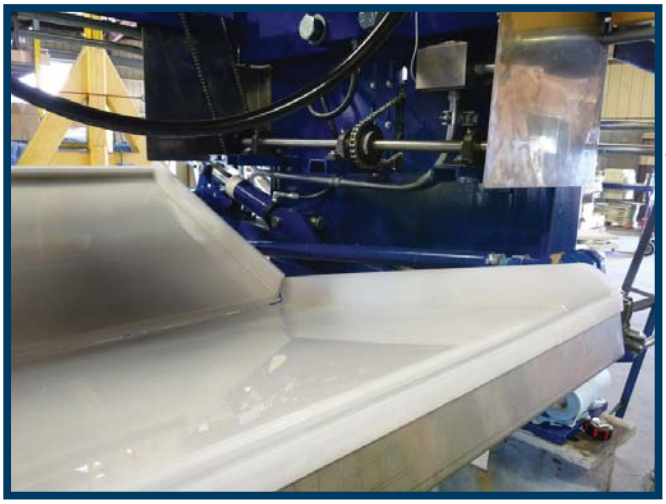

Photo # 132546

Figure 6.7

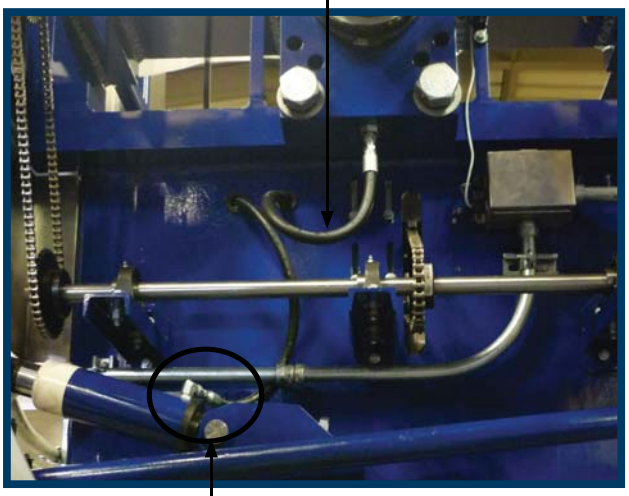

Photo # 132547

Figure 6.8

NOTE : See the drawing # 490052 for bombay doors hydraulic parts

140122B-Electric Hydraulic.indd 11 12/8/2010 3:47:07 PM

6.0 OPERATION

6.4- Electric hydraulic assembly drawing

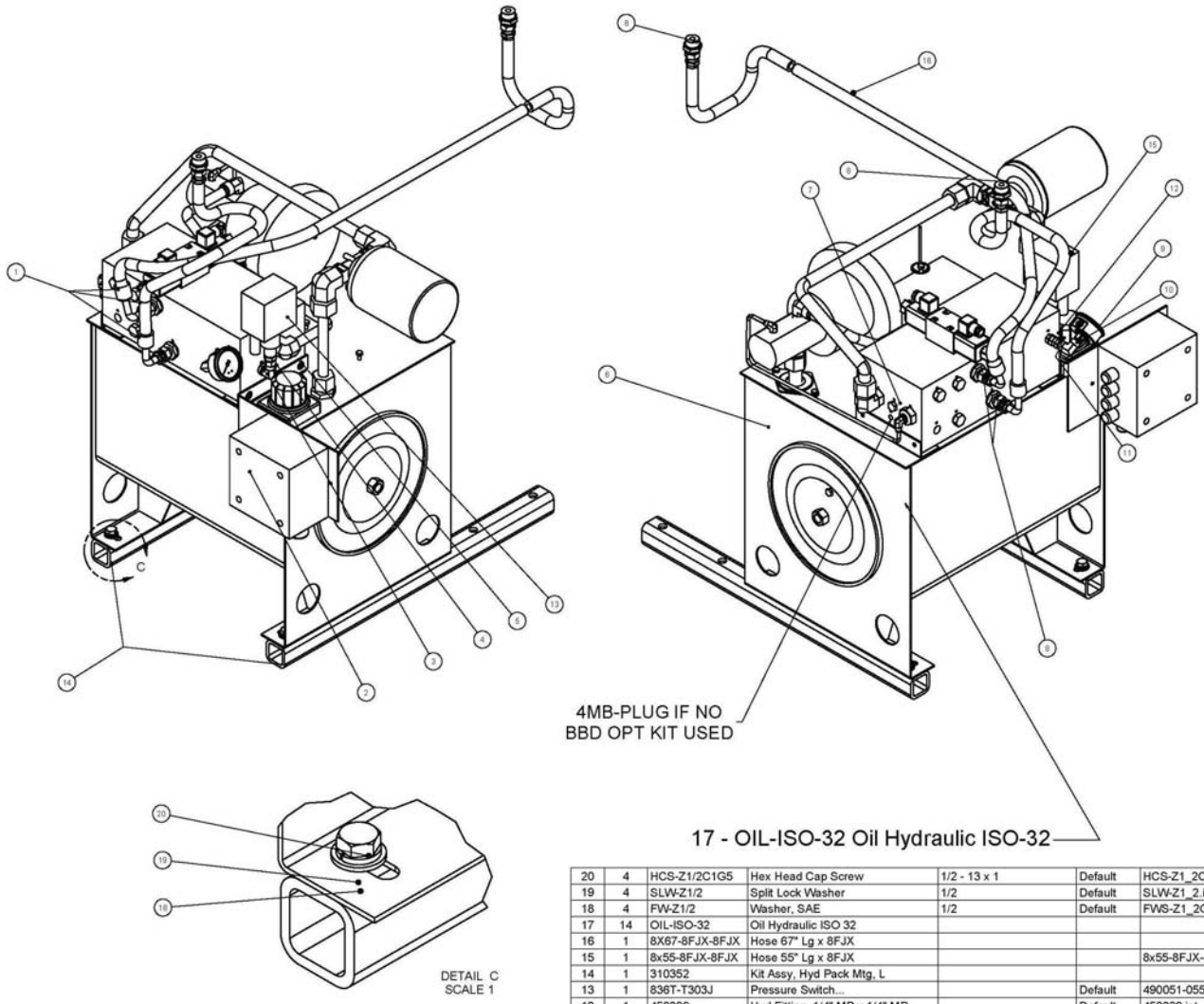

ITEM	QTY	P/N	DESCRIPTION	SIZE	MATERIAL	FILE NAME
20	4	HCS-Z1/2C1G5	Hex Head Cap Screw	1/2 - 13 x 1	Default	HCS-Z1_2C1.00G5.ipt
19	4	SLW-Z1/2	Split Lock Washer	1/2	Default	SLW-Z1_2.ipt
18	4	FW-Z1/2	Washer, SAE	1/2	Default	FWS-Z1_2G5.ipt
17	14	OIL-ISO-32	Oil Hydraulic ISO 32			
16	1	8X67-8FJX-8FJX	Hose 67" Lg x 8FJX			
15	1	8x55-8FJX-8FJX	Hose 55" Lg x 8FJX			8x55-8FJX-8FJX.iam
14	1	310352	Kit Assy, Hyd Pack Mtg, L			
13	1	836T-T303J	Pressure Switch...		Default	490051-055.ipt
12	1	450239	Hyd Fitting, 1/4" MB x 1/4" MP 4MB-4MP		Default	450239.ipt
11	1	450064	Bushing, Swivel, 4MP-4FPX	1/4" NPT	Brass	450064.ipt
10	1	509066	Elbow, Fitting Hydraulic, 4FP-4FP90		Default	509066.ipt
9	1	5000CB - 470004	GAUGE, 5000 psi, 9692253	1/4"NPT	Default	470004.ipt
8	4	450264	Fitting, 3/4" MB x 1/2" MJ, Straight, Hy, 12MB-8MJ		Default	450264.ipt
7	1	4MB-PLUG	Plug, 1/4" MB, 4MB-PLUG		Default	450240.ipt
6	1	490050	Assy Hydraulic Pack			490050.iam
5	1	6MB-PLUG	Plug, 3/8" MB, 6MB-PLUG		Default	450241.ipt
4	1	450238	Nipple 3/8" MNPT x 3/8"MJ, 6MP-6MJ		Default	450238.ipt
3	1	450253	Elbow, Hyd.,3/8MBx3/8FPSwivel, 90Deg 6MB-6FPX90		Default	450253.ipt
2	1	375137	Assy.J-Box Hydraulic/Electric			375137.iam
1	3	8MB-PLUG	Plug, 1/5" MB, 8MB-PLUG		Default	450235.ipt

UNLESS OTHERWISE SPECIFIED
TOLERANCES
FRACTIONS(NON-MACHINED)
OVER 2 FT. ± 1/8
UNDER 2 FT. ± 1/16
MACHINED 0 +± .050
MACHINED .00 +± .030
MACHINED .000 +± .010
ANGLES ± 1 DEG
ALL DIMENSIONS ARE IN INCHES
FILLET RADII .015 TO .030
BREAK ALL CORNERS .015 MAX.
MACHINED PARALLELISM & SQUARENESS .001/FT

DRAWN G.McGinnis	1/20/2010	
CHECKED G.McGinnis	3/31/2010	
MFG		
APPROVED G.McGinnis	3/31/2010	

PACIFIC PRESS CO.
2418 CYPRESS WAY
FULLERTON, CA 92831
(714) 525-0630 FAX (714) 525-2664

TITLE
ELECTRONIC / HYDRAULIC ASSY
UNIVERSAL MANIFOLD, NEMA 4
ENCLOSURE (1200)

SIZE D | DWG NO 495035 | REV B
SCALE: | DO NOT SCALE DRAWING | SHEET 1 OF 1

140122B-Electric Hydraulic.indd 12 12/8/2010 3:47:10 PM

6.0 OPERATION

6.5- Hydraulic diagram - 800 mm, 1000 mm and 1200 mm filter presses

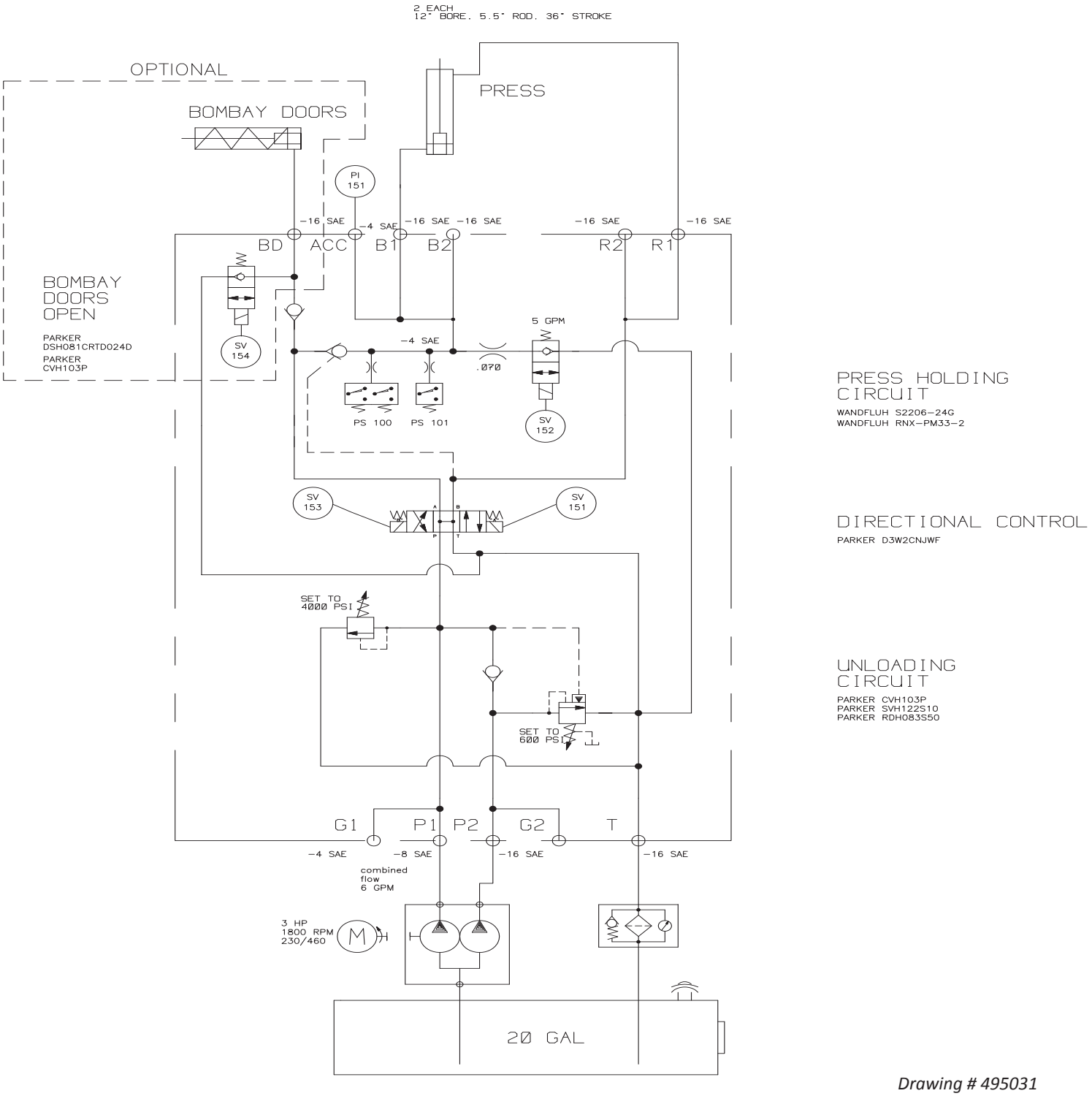

Drawing # 495031

140122B-Electric Hydraulic.indd 13 12/8/2010 3:47:12 PM

6.0 OPERATION

6.6- Hydraulic diagram - 1500 mm filter press

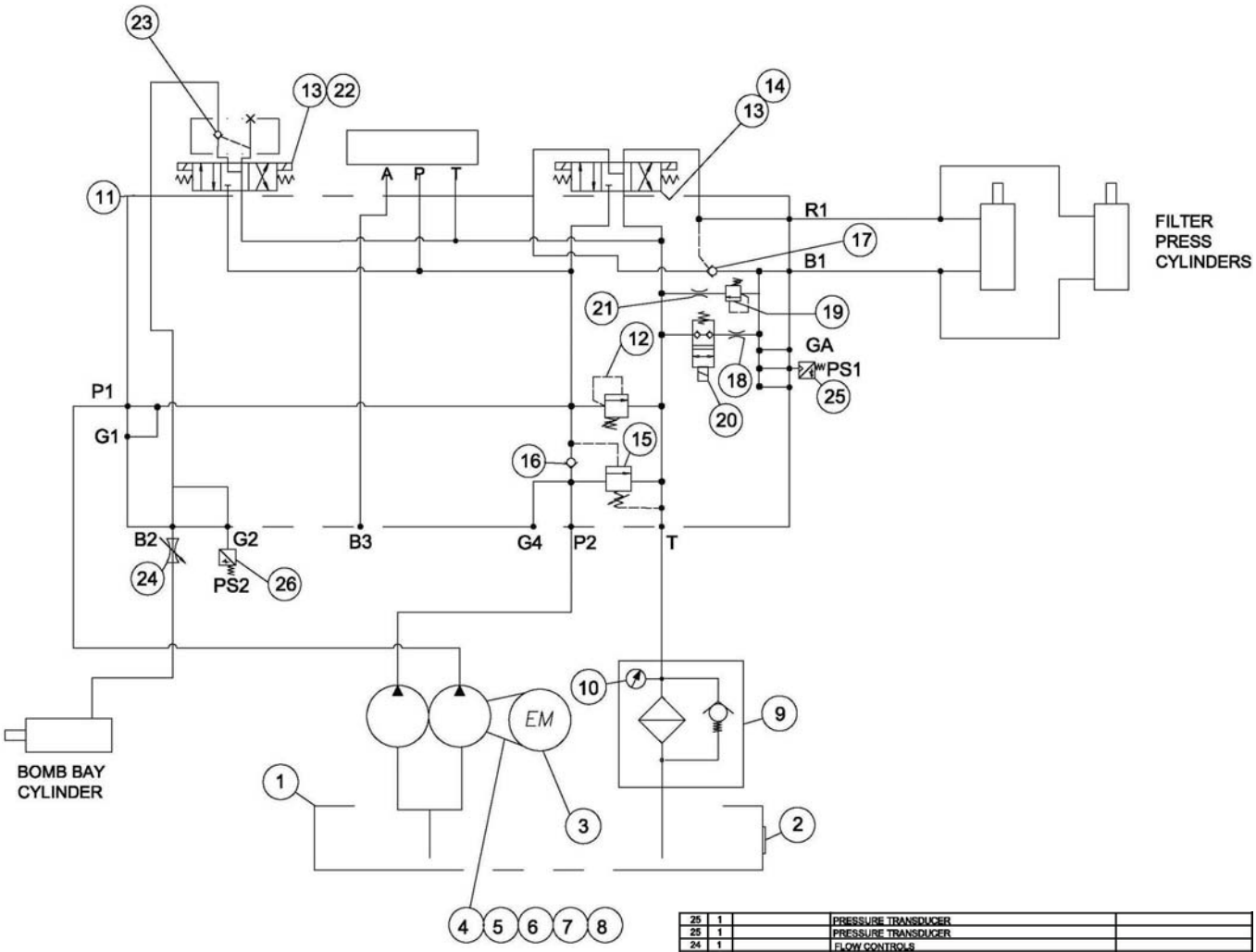

ITEM	QTY	P/N	DESCRIPTION	MANUFACTURER
25	1		PRESSURE TRANSDUCER	
25	1		PRESSURE TRANSDUCER	
24	1		FLOW CONTROLS	
23	2		P.O. CHECK VALVE	
22	1		BOLT KIT	
21	1		ORIFICE, .005 1/8-27 NPT	
20	1		SOL. VALVE 2 WAY W/DIN CONN. 24 VDC	
19	1		RELIEF VALVE	
18	1		ORIFICE,	
17	1		P.O. CHECK VALVE	
16	1		CHECK VALVE	
15	1		SEQUENCE VALVE	
14	1		BOLT KIT	
13	2		DIRECTIONAL CONTROL	
12	1		RELIEF VALVE	
11	1		MANIFOLD SPECIAL	
10	1		FILTER GUAGE	
9	1		RETURN FILTER	
8	1		SPIDER INSERT	
7	1		HALF COUPLER	
6	1		HALF COUPLER	
5	1		PUMP MOTOR ADAPTER	
4	1		PARKER PUMP	
3	1		ELECTRIC MOTOR	
2	1		FLANGE	
1	1		RESERVOIR, 20 GALLON	

UNLESS OTHERWISE SPECIFIED
TOLERANCE
FRACTIONS/DECIMALS
OVER 2 FT. ± 1/8
UNDER 2 FT. ± 1/16
MACHINED .X ± .030
MACHINED .XX ± .005
MACHINED .XXX ± .010
ANGLES ± 1 DEG
ALL DIMENSIONS ARE IN INCHES
FILLET RADII .015 TO .030
BREAK ALL CORNERS .015 MAX.
MACHINED PARALLELISM & PERPENDICULARITY

DRAWN G.McGinnis	9/29/09	PACIFIC PRESS CO. 8118 ENTERPRISE WAY (714) 826-0850 FAX (714) 826-0884
CHECKED		TITLE Diagram, Hydraulic, 1500 Elect Hyd Sys, AIS (New Manifold)
MFG		
APPROVED		SIZE A · DWG NO 495034 · REV B
		SCALE: 1 / 10 · DO NOT SCALE DRAWING · SHEET 1 OF 1

7.0 HYDRAULIC CYLINDER

Below is a diagram of typical cylinder used by Pacific Press. Identification of the part list is listed.

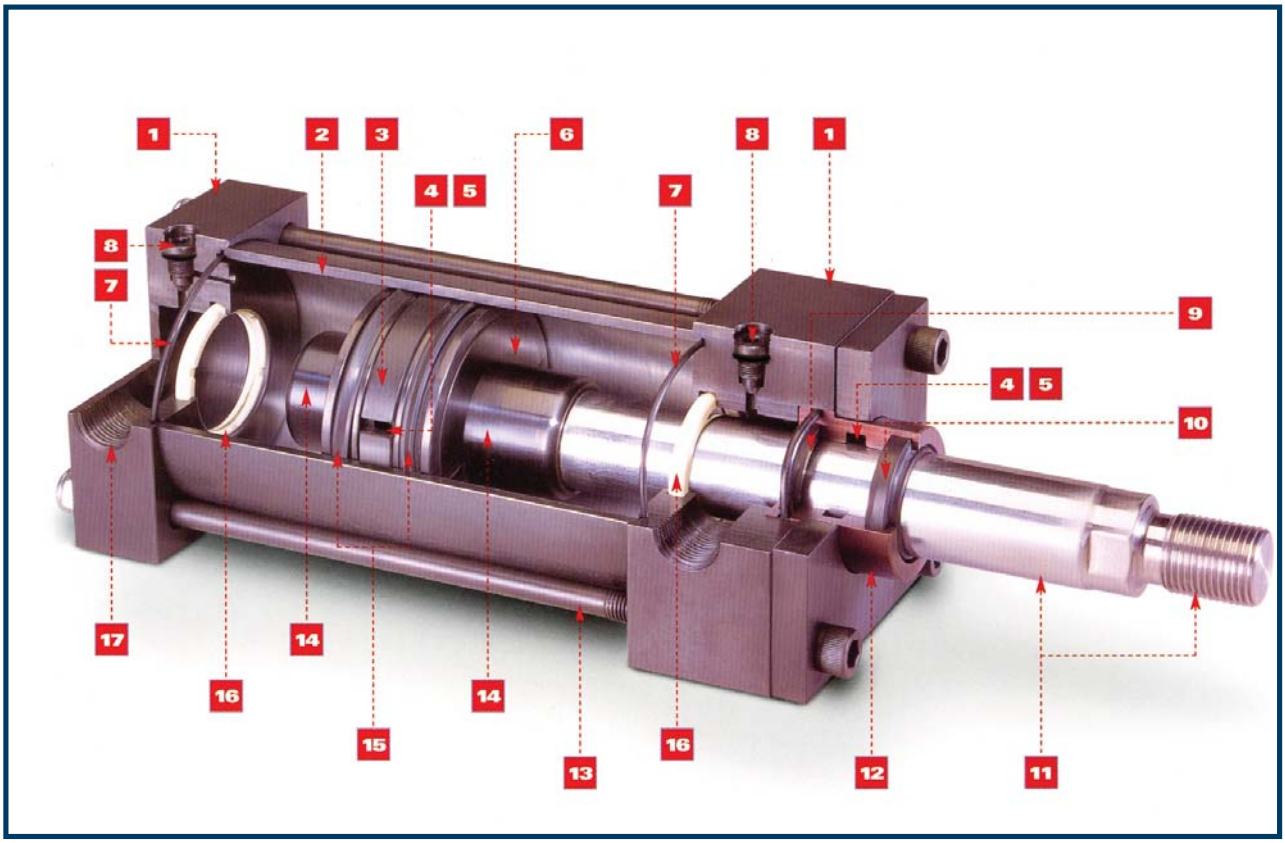

Photo #132539

Figure 7.0.1 - Hydraulic cylinder

1- Heads and caps
2-Cylinder tube
3-Wear band
4-Lubrication reservoirs
5-Lubricant (not shown)
6-Piston
7-Tube seals
8-Cushion adjustements screw
9-Rod seal
10-Rod wiper
11-Piston rod
12-Bearing cartridge
13-Tie rods
14-Cushion hubs
15-Piston seals
16-Cushion seals
17-Ports

140122B-Electric Hydraulic.indd 15 12/8/2010 3:47:15 PM

8.0 MAINTENANCE AND TROUBLESHOOTING

8.1 Maintenance of electric hydraulics

The electric hydraulic system is engineered to be accessed easily and is bolted on to facilitate easy maintenance and inspection.

8.1.1- Upon start up

a. Inspect hydraulic lines for leaks around the pressure pack around the cylinder. If leaks are found, the lines must be tightened or replaced.
b. Inspect fittings for leakage.
c. Check for correct closure pressure. Refer to press manual for this information.
d. Before starting the pump-motor, you should check for correct direction of pump rotation. Determine if it is clokwise (right hand) rotation or counter clokwise (left hand) rotation when viewed from the pump shaft end. To verify correct pump-motor rotation, “jog” the pump-motor by selecting the motor starter “on” control for one second and then turn”off” the pump-motor. Make necessary changes to electric motor wiring connections if the pump rotation is not correct. Sustained incorrect rotation of the hydraulic pump will cause serious pump damage.
Prior to starting the pump-motor, you should also check the electric motor’s power wiring drawing for correct wiring connections. You must set the power unit assembly relief valve adjustement(s) and/or pressure compensated pump compensator ajustement(s) to minimum pressure.

8.1.2- Weekly

a. Check hydraulic reservoir fluid level. The level in the hydraulic reservoir must be maintened to provide trouble-free service. Use AW ISO 32.

8.1.3- Semi- annual or Annual

a. Check the condition of the oil-it is best to take a sample and inspect to see that water has not affected the oil. This would be visually seen as a milky white contaminant. If it is necessary to replace use ISO 32 hydraulic fluid. If there is any question send the oil out for analysis to a third party vendor.
b. Replace oil filter spin on element.

8.2 Troubleshooting of electric hydraulics

For troubleshooting of the hydraulic circuit , a trained or qualified hydraulic technicians is recommended. The diagram on page 13 can be used for this purpose.

8.2.1- The presses closes, but does not go up to pressure (hydraulic pump continues to pump)
a. Check hydraulic fluid level.
b. Check for oil leaks.
c. Adjust the pressure relief valve.
d. Check the pressure release valve.
e. Replace the hydraulic pump.

140122B-Electric Hydraulic.indd 16 12/8/2010 3:47:16 PM

8.0 MAINTENANCE AND TROUBLESHOOTING

8.2.2- The press closes, but does not go up to pressure (hydraulic pump stops)
a. Adjust / Check hydraulic pressure unloading valve set point.

8.2.3- The press does not open
a. Check the decompress valve.
b. Check the pressure switch.
c. Check the hydraulic filter.

8.2.4- The press opens slowly
a. Check the hydraulic pump for correct flow.
b. Check hydraulic oil temperature (possible too cold).

8.2.5- Other hydraulic problems
a. Worn seals in hydraulic the cylinder (replace seals).
b. Worn seals in the hydraulic pump (replace pump).

8.2.6- Noise or vibration
a. Mounting misalignment between pump and motor shafts due to rough handling in shipping can cause noise and vibration. If noisy, check shaft alignment with a dial indicator and, if necessary, align to within tolerance on pump specification sheet. Check the manufacturer's date sheet for maximum misalignment tolerance.

8.2.7- Pump noise
a. A noisy pump may be an indication of a restricted pump inlet line. Care should be taken in starting the system when the fluid temperature is below 60° Fahrenheit. Low temperatures cause the viscosity of the oil to increase which increases resistance to flow in the inlet line to the pump. This will cause a reduced pressure at the pump inlet resulting in cavitation. Allowed to continue, cavitation can cause severe pump damage.

If the hydaulic fluid cannot be maintained at a sufficiently high temperature to prevent cavitation, heaters should be installed in the reservoir and set to assure maximum fluid viscosity is not exceeded.

Air entering the pump inlet piping can also cause excessive pump noise. Check the oil level in the reservoir to be sure the pump inlet piping is below the oil level. Make certain all pump inlet piping is clean and that the joints are tight so that air cannot enter the pump.

8.2.8- Oil temperature
a. Generally, the temperature of the fluid at the pump inlet should not exceed 140° Fahrenheit. It is preferable to maintain temperature less than 120° Fahrenheit. Excessive temperature can damage the oil, cause valves to stick and accelerate component wear.

Note : Pacific Press Company offers service and parts for the filter press and filter press hydraulics.Please contact Pacific Press Co. (PPC) at 1.800.878.8029.

140122B-Electric Hydraulic.indd 17 12/8/2010 3:47:16 PM

Attachment P-8

Routine Inspection and Maintenance for Water Treatment Plant Influent and Effluent Pipelines (Future Construction)

‘

Midnite Mine Superfund Site
100 Percent Design

WTP Influent and Effluent Pipelines – Operation, Maintenance, and Monitoring Plan

June 2015

Prepared for:

Dawn Mining Company
PO Box 250
Ford, Washington 990413

and

Newmont USA Limited
6363 South Fiddler’s Green Circle
Greenwood Village, Colorado 80111

Prepared By:

MWH Americas, Inc.
2890 E. Cottonwood Parkway, Suite 300
Salt Lake City, UT 84121

TABLE OF CONTENTS

1.0 INTRODUCTION 1

1.1 PURPOSE, SCOPE, AND OBJECTIVES 1

2.0 DESCRIPTION OF WTP INFLUENT AND EFFLUENT PIPELINES 2

2.1 WTP INFLUENT PIPELINES 2

2.1.1 Temporary Influent Pipelines 2

2.1.2 Permanent Influent Pipelines 3

2.2 WTP EFFLUENT PIPELINE 3

3.0 WTP INFLUENT AND EFFLUENT PIPELINE - OPERATION, MAINTENANCE AND MONITORING 4

3.1 WTP INFLUENT PIPELINE 4

3.2 WTP EFFLUENT PIPELINE 5

3.3 MAINTENANCE OF WTP INFLUENT AND EFFLUENT PIPELINES 5

3.3.1 Manhole Damage 5

3.3.2 Pipeline Leaks 6

3.3.3 Pipeline Maintenance 6

4.0 RECORD KEEPING AND REPORTING 7

4.1 GENERAL 7

4.2 REPORTING 7

5.0 REFERENCES 8

LIST OF TABLES

Table 1 Operation, Maintenance, and Monitoring Summary – WTP Influent Pipeline

Table 2 Operation, Maintenance, and Monitoring Summary – WTP Effluent Pipeline

LIST OF FIGURES

Figure 1 Overall Influent Pipelines Plan – End of Construction

Figure 2 Overall Effluent Pipeline Plan – End of Construction

LIST OF ACRONYMS

BODR	Basis of Design Report
BPA	Backfilled Pit Area
CD	Consent Decree
EPA	U.S. Environmental Protection Agency
HDPE	high density polyethylene
NPDES	National Pollutant Discharge Elimination System
OM&M	Operation, Maintenance and Monitoring
ODA	Other Disturbed Areas
RA	remedial action
SDR	standard diameter ratio
Site	Midnite Mine Superfund Site
WCA	Waste Containment Area
WTP	Water Treatment Plant

1.0 INTRODUCTION

Influent pipelines will be used to convey impacted water from backfilled Pit 3, Pit 4, existing extraction well GW-54 location in the Backfilled Pit Area (BPA), and the two Pit 3 toe seep collectors to the new Water Treatment Plant (WTP) and a single effluent pipeline will convey treated water from the WTP to the Spokane River Arm of Lake Roosevelt. Because these influent and effluent pipelines will have similar monitoring and maintenance activities following their construction, they both are included in this plan. This plan then presents the operation, maintenance, and monitoring (OM&M) activities for the WTP influent and effluent pipelines that will be constructed during the remedial action (RA) at the Midnite Mine Superfund Site (Site).

As currently planned, implementation of the Selected Remedy will be conducted in three distinct phases with individual components of the overall remedy completed during each phase. As a result, the WTP influent pipeline OM&M activities will be necessary from the time the Waste Containment Area (WCA) cover is installed on Pit 4 during Phase 1, through final installation of the Pit 3 cover system at the end of Phase 3, and into the post-remedy monitoring period. OM&M activities associated with the effluent pipeline will be necessary only after construction of the new WTP is completed and treated water is being discharged to Lake Roosevelt. OM&M activities for other remedial elements that are under construction will be conducted in accordance with the *Remedial Action Site Wide Monitoring Plan* in *Appendix Q of the Basis of Design Report* (BODR; MWH, 2015).

This WTP Influent and Effluent Pipelines OM&M Plan is an attachment to the *Midnite Mine Superfund Site Operation, Maintenance, and Monitoring Plan*, which describes the OM&M for all of the components of the Selected Remedy, which will require monitoring and maintenance.

1.1 PURPOSE, SCOPE, AND OBJECTIVES

The purpose of this WTP Influent and Effluent Pipelines OM&M Plan is to describe the inspection, maintenance and monitoring activities, and to establish frequencies for this work. The primary objectives of this plan are to:

- Monitor and maintain influent and effluent pipelines relative to manhole damage
- Monitor and maintain influent and effluent pipelines relative to pipeline leaks.

To meet these objectives, this WTP Influent and Effluent Pipelines OM&M Plan includes the following:

- Identification of the pipeline runs that require routine inspection, monitoring, and maintenance,
- Documentation of procedures for inspection and maintenance of these pipeline segments, and
- Listing of reporting requirements.

2.0 DESCRIPTION OF WTP INFLUENT AND EFFLUENT PIPELINES

This section of the WTP Influent and Effluent OM&M Plan provides a description of the pipelines to be installed during RA construction. The configuration of the permanent influent and effluent pipelines as shown in the Midnite pipeline design (Appendix J and Section 10 drawings of the BODR) and discussed in this section are shown on Figures 1 and 2.

2.1 WTP INFLUENT PIPELINES

The influent pipelines mostly will traverse land that will be remediated (i.e., disturbed through mine waste removal) and reclaimed at the end of remediation. As such, the influent pipes during construction will be temporary and will be relocated constantly throughout the remedial action RA process. Due to the highly variable nature the temporary pipeline locations and their alignments, most of the construction and positioning of the temporary pipelines will be left to the selected Contractor's discretion and take place in the field as the land surface changes. Permanent influent pipeline construction will be concurrent with the final cover installation or ground surface remediation/revegetation in areas where covers are not required. The influent pipelines regardless if they are temporary or permanent will be constructed of dual containment high density polyethylene (HDPE) of various sizes and standard diameter ratio (SDR) values. HDPE manholes will be installed at regular intervals to allow maintenance of the pipeline.

2.1.1 Temporary Influent Pipelines

The selected Contractor will be required, through the Drawings and Technical Specifications, to use specific pipeline materials for construction of the temporary piping. They will be required to meet the project performance standards for containment of contaminated water which means continually monitoring the temporary pipelines during the construction process. This process will be straightforward in that most of the temporary lines are above ground. For those that are

subsurface, if a leak is detected it will be repaired and because the temporary pipeline in most cases would be on or buried in contaminated material, it will be cleanup up by excavation and transported to one of the pits for containment.

Currently and at the beginning of construction, mine-effected water will be piped directly from Pit 4, Pit 3, and the BPA to the existing WTP for treatment. The existing WTP will be operated until the new WTP is constructed which will be after the NPDES permit for discharge to Lake Roosevelt is approved.

2.1.2 Permanent Influent Pipelines

There will be four primary influent water sources that must be treated during construction and following the RA. These sources are: Pit 3, Pit 4, BPA well GW-54, and the Pit 3 toe seep collectors as depicted on Figure 1. The first permanent pipelines will be installed concurrently with the Pit 4 cover installation. This will be followed by other permanent influent pipeline installation when the subsequent covers are initiated and completed on Pit 3 and the BPA. Permanent influent pipelines from the seep collectors will be installed as mine wastes are removed, the areas are remediated, and the path to the WTP is revegetated.

2.2 WTP EFFLUENT PIPELINE

The selected effluent pipeline alignment is depicted on Figure 2 and leads from the new WTP to Lake Roosevelt. The effluent pipeline is approximately 5.5 miles long and will be constructed of HDPE of various sizes and SDR values as shown on Figure 2. Manholes with H20 traffic rated covers will be installed at regular intervals to allow observation and maintenance of the pipeline.

The pipeline progresses from the new WTP south down what will be the alignment of the proposed future Midnite Mine Access Road until it encounters the Ford-Wellpinit (aka the West End) Road. After passing under the Ford-Wellpinit Road, the pipeline continues downhill in a southerly direction along an unnamed, unpaved 4x4 road until intersecting the Blue Creek Road (BIA Hwy 55). The pipeline then is installed in the Blue Creek Road Bed to the confluence of Blue Creek with the Spokane Arm of Lake Roosevelt (as depicted in more detail in Section 10 of the 100% BODR drawings). The effluent pipe enters the lake and the conveyed water is discharged via a subsurface diffuser positioned in the middle of the submerged Spokane River channel.

It should be noted that the design of the effluent pipeline has been held at the 60% design level until the NPDES permitting process has concluded.

3.0 WTP INFLUENT AND EFFLUENT PIPELINE - OPERATION, MAINTENANCE AND MONITORING

WTP Influent OM&M will be performed from the time the final covers are installed in each of the WCAs (i.e., completion of the Pit 4 cover in Phase 1, the Pit 3/BPA cover in Phase 3 of the RA, and remediation/revegetation of the area between the seep collectors and the WTP) and into post-remedy monitoring. As stated previously, Effluent OM&M activities associated with the effluent pipeline will commence once the new WTP is constructed, operational and discharging treated water. Observation and documentation through inspection reports will enable prompt repair scheduling and execution of pipeline repair or maintenance. The monitoring will include visual inspection of the WTP Influent and Effluent pipelines to ensure system integrity is maintained. The monitoring plan, including the individual monitoring tasks, schedule, monitoring criteria, and maintenance, is discussed below.

3.1 WTP INFLUENT PIPELINE

The monitoring requirements for the WTP Influent Pipeline (temporary and permanent) are summarized in Table 1. The inspections will be performed to be protective of the pipeline system. Vehicular access along the dewatering well maintenance roads located on the capped WCA surface will allow the observations from multiple locations along the pipeline alignment as well as access to manholes that will be installed at regular intervals along the pipeline alignments. The WTP influent pipeline will be subjected to the following inspections and monitoring requirements:

1) Routine Inspection:

    a. Manhole Damage – manholes will be observed for signs of structural damage and missing components.

    b. Signs of pipeline leaks – the ground surface along the pipeline alignment will be observed for signs of soil saturation or settlement.

    c. Leak detection – manholes will be monitored for the presence of water or visible flow of water from the containment piping.

The monitoring frequency and unacceptable conditions (action triggers) for each of these monitoring metrics are summarized in Table 1 along with the associated (maintenance) response action.

3.2 WTP EFFLUENT PIPELINE

The monitoring frequency and action trigger requirements for WTP Effluent Pipeline are summarized in Table 2. The inspections will be performed to be protective of the pipeline system. Vehicular access along the Site Access and Blue Creek roads will allow the observations from multiple locations along the pipeline alignment as well as access to manholes that will be installed at regular intervals along the pipeline alignments. The WTP effluent pipeline will be subjected to the following inspections and monitoring requirements:

1) Routine Inspection:
    a. Manhole Damage – manholes will be observed for signs of structural damage and missing components.
    b. Signs of pipeline leaks – the ground surface along the pipeline alignment will be observed for signs of soil saturation or settlement.

The unacceptable conditions (action triggers) for each of these monitoring metrics are summarized in Table 2 along with the associated (maintenance) response action.

It should be noted that the monitoring requirements for the Effluent Pipeline may be modified as the design is advance once the NPDES permitting process is finalized.

3.3 MAINTENANCE OF WTP INFLUENT AND EFFLUENT PIPELINES

The purpose of the maintenance procedures for the WTP Influent and Effluent Pipelines is to ensure that these pipelines perform as designed and that maintenance activities ensure their long-term integrity and viability. This is accomplished by ensuring the materials and maintenance practices are consistent with the final design and specifications. Below the maintenance activities for the influent and effluent pipelines are presented.

It should be noted that the maintenance requirements for the Effluent Pipeline may be modified as the design is advance once the NPDES permitting process is finalized.

3.3.1 Manhole Damage

Manholes located along or within Site access roads are susceptible to damage. If damage is noted during routine inspections (as defined in Tables 1 and 2), repair procedures may include

replacement of manhole covers and repair or replacement of concrete pads. Corrective action repairs and maintenance will be prioritized following inspections indicating there are problems in accordance with Tables 1 and 2.

3.3.2 Pipeline Leaks

Leaks in HDPE pipelines are extremely rare and may develop due to defects during fusion welding of individual pipe sections together or damage during backfill placement. Visual observations of saturated soil or settlement of the ground surface along the pipeline alignment are all indicative of pipeline leaks.

Influent Pipeline – Faulty materials and/or construction, or damage to the influent pipeline which results in leakage of pipelines on the influent side during construction are of relatively minor concern because they overlie contaminated materials. However, long term the permanent influent pipelines will be installed within clean cap materials and any leakage of contaminated water then is of major concern.

Effluent Pipeline – Faulty materials and/or construction, or damage to the effluent pipeline which results in leakage from effluent pipeline is problematic for a variety of reasons, but is not a major environmental concern because the water has been treated and only a few contaminants remain in the water which are mixed in Lake Roosevelt waters to acceptable standards. As a result, the effluent pipeline maintenance schedule is less stringent than the influent pipeline monitoring and maintenance schedule.

Repairing influent and effluent pipeline leaks may involve excavation to expose damaged pipe, cutting and removing damaged piping, and fusion welding of replacement pipe sections. Corrective action repairs and maintenance will be prioritized following inspections indicating there are problems in accordance with Tables 1 and 2.

3.3.3 Pipeline Maintenance

The influent pipeline will be observed to determine if there is water flowing from the containment pipe into the manholes. Observable flow in the manhole would indicate a pipeline leak. Corrective action repairs and maintenance will be prioritized following inspections indicating there are problems in accordance with Table 1.

The effluent pipeline will be observed to determine if there is water flowing from manhole to manhole down the entire alignment to the Lake Roosevelt. Lack of observable flow could mean a pipeline leak or plugged piping. Once it has been verified that a pipeline leak is not occurring,

the individual manhole overflow piping will be inspected to determine which overflow is active to identify the section of pipe that has become blocked. Once the section of blocked piping has been identified, maintenance of the pipeline to remove obstructions may be required. This typically involves the use of a water jet or pig to dislodge materials that have formed a plug in the pipe. Corrective action repairs and maintenance will be prioritized following inspections indicating there are problems in accordance with Table 2.

4.0 RECORD KEEPING AND REPORTING

4.1 GENERAL

Documentation of WTP Influent and Effluent Pipelines OM&M activities will be completed and retained pursuant to the requirements of the Consent Decree (CD; EPA, 2011). The final *OM&M Plan* will include a Monitoring and Maintenance Activity form.

4.2 REPORTING

In accordance with the *Midnite Mine Superfund Site Operation, Maintenance, and Monitoring Plan,* to which this plan is attached, an annual summary report of the monitoring and maintenance activities will be prepared pursuant to all Site OM&M activities related to:

- Cover System and Other Disturbed Areas (ODAs) Inspection and Maintenance
- Midnite Mine WTP
- Fence Inspection and Maintenance
- Site Access Roads and Culverts
- Surface Water Diversions
- Alluvial Groundwater Controls
- Ponds and Tanks
- WTP Influent and Effluent Pipelines
- Pit Area Dewatering and Underdrain Wells

This yearly summary report will be transmitted to the EPA by March 31 annually, summarizing the prior year's activities.

5.0 REFERENCES

MWH Americas, Inc. (MWH), 2015. Midnite Mine Superfund Site 100 Percent Basis of Design Report. Prepared on behalf of Newmont USA Limited and Dawn Mining Company for submittal to U.S. Environmental Protection Agency, Region 10. June.

U.S. Environmental Protection Agency (EPA), 2011. Consent Decree Statement of Work for the Remedial Action for the Midnite Mine Superfund Site, Spokane Indian Reservation, Washington. Civil Action No. CV-05-020-JLQ. United States of America, Plaintiff v. Dawn Mining Company, LLC and Newmont USA Limited, Defendants. August.

TABLE 1
WTP INFLUENT PIPELINE - MIDNITE MINE
OPERATION, MAINTENANCE, AND MONITORING SUMMARY

Post-Remedial Monitoring Element	Measurement/Inspection	Activity Frequency	Action Trigger/Unacceptable Condition	Response Action
Routine Inspections	Manhole Damage (During Construction)	Weekly	Signs of damage to manhole. Missing manhole covers.	Corrective action repairs and maintenance will be prioritized following inspections indicating there are problems and scheduled within 3 working days. Manhole repairs then will be completed within 4 working days except if missing manholes are discovered which will be replaced immediately.
	Signs of Pipeline Leaks (During Construction)	Weekly	Signs of saturated soils or settlement of ground surface will be observed based on a visual inspection. [1]	Corrective action repairs and maintenance will be prioritized following inspections indicating there are problems and scheduled within 3 working days. The repairs then will be completed within 2 working days.
	Leak Detection (During Construction)	Weekly	Presence of water in manhole or visible flow of water out of the containment pipe. Inspection to be performed during pump operations.	See response for pipeline leaks
	Manhole Damage (Post RA Construction)	Semiannually	Signs of excessive erosion around or other damage to manhole. Erosion damage greater than 6 inches in depth along the perimeter. Missing manhole covers.	Corrective action repairs and maintenance will be prioritized following inspections indicating there are problems and scheduled within 30 days. The repairs then will be completed within the field season except if missing manhole covers are discovered which will be replaced immediately.
	Signs of Pipeline Leaks (Post RA Construction)	Semiannually	Signs of saturated soils or settlement of ground surface will be observed based on a visual inspection.	Corrective action repairs and maintenance will be prioritized following inspections indicating there are problems and scheduled within 30 days. The repairs then will be completed within the field season.
	Leak Detection (Post RA Construction)	Semiannually	Presence of water in manhole or visible flow of water out of the containment pipe. Inspection to be performed during pump operations.	As above in response action for pipeline leaks (Post RA Construction)
Routine Measurements	NONE	NONE	NONE	NONE

Notes:

1. During RA construction when temporary pipelines are uncovered and relocated, the fusion-welded joints along the pipeline length will be visually inspected for cracks or leaks in the outer wall of the containment pipe. This inspection must occur before the pipe is anchored in the new location.

TABLE 2
WTP EFFLUENT PIPELINE - MIDNITE MINE
OPERATION, MAINTENANCE, AND MONITORING SUMMARY

Post-Remedial Monitoring Element	Measurement/Inspection	Activity Frequency	Action Trigger/Unacceptable Condition	Response Action
Routine Inspections	Manhole Damage	Semiannually	Signs of excessive erosion around or other damage to concrete pad. Erosion damage greater than 1 inch in depth along more than 50% of pad perimeter. Missing manhole covers.	Corrective action repairs and maintenance will be prioritized following inspections indicating there are problems and scheduled within 30 days. The repairs then will be completed within the field season.
	Signs of Pipeline Leaks	Semiannually	Signs of saturated soils or settlement of ground surface will be observed based on a visual inspection.	As above in first response
	Observation of Flow	Semiannually	No flow into manhole from upstream pipeline segment.	Corrective action repairs and maintenance will be prioritized following inspections indicating there are problems and scheduled within 10 working days. The repairs then will be completed within 30 working days of discovery.
Routine Measurements	NONE	NONE	NONE	NONE

Notes:

1. During RA construction when temporary pipelines are uncovered and relocated, the fusion-welded joints along the pipeline length will be visually inspected for cracks or leaks in the outer wall of the containment pipe. This inspection must occur before the pipe is anchored in the new location.

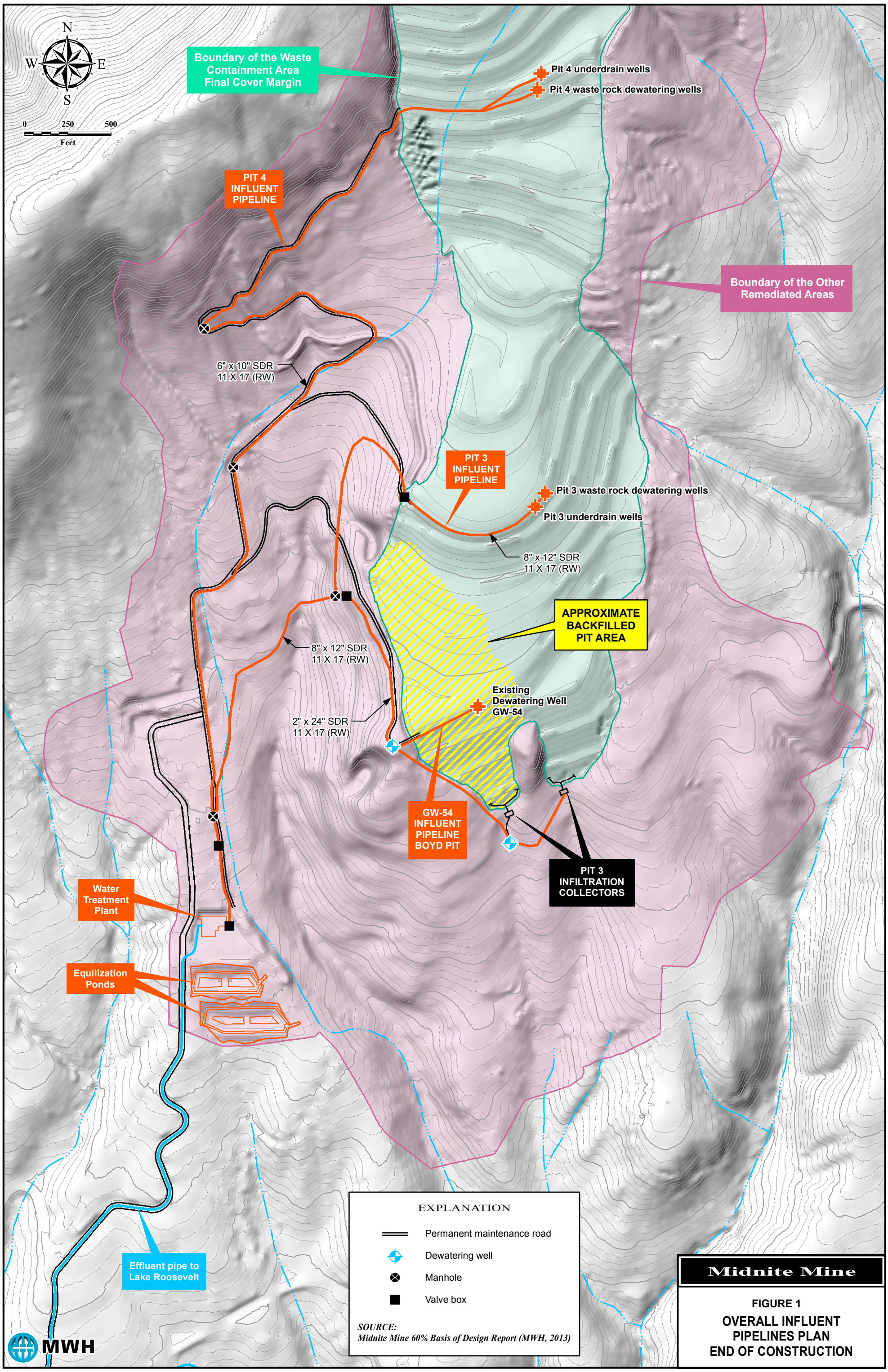
N
W
E
S
0
250
500
Feet
Boundary of the Waste Containment Area Final Cover Margin
Pit 4 underdrain wells
Pit 4 waste rock dewatering wells
PIT 4 INFLUENT PIPELINE
Boundary of the Other Remediated Areas
6" x 10" SDR
11 X 17 (RW)
PIT 3 INFLUENT PIPELINE
Pit 3 waste rock dewatering wells
Pit 3 underdrain wells
8" x 12" SDR
11 X 17 (RW)
APPROXIMATE BACKFILLED PIT AREA
8" x 12" SDR
11 X 17 (RW)
Existing Dewatering Well GW-54
2" x 24" SDR
11 X 17 (RW)
GW-54 INFLUENT PIPELINE BOYD PIT
PIT 3 INFILTRATION COLLECTORS
Water Treatment Plant
Equilization Ponds
Effluent pipe to Lake Roosevelt
EXPLANATION
Permanent maintenance road
Dewatering well
Manhole
Valve box
SOURCE:
Midnite Mine 60% Basis of Design Report (MWH, 2013)
MWH
Midnite Mine
FIGURE 1
OVERALL INFLUENT PIPELINES PLAN
END OF CONSTRUCTION

J:\Industrial Projects\MIDNITE MINE\Deliverables_Working Documents\OMM_Influent_Effluent\FIGURES\Fig 2-2_Overall Effluent Pipelines Plan_EOC_Jul2014.mxd 10 Jul 2014 DRAWN BY D. Severson

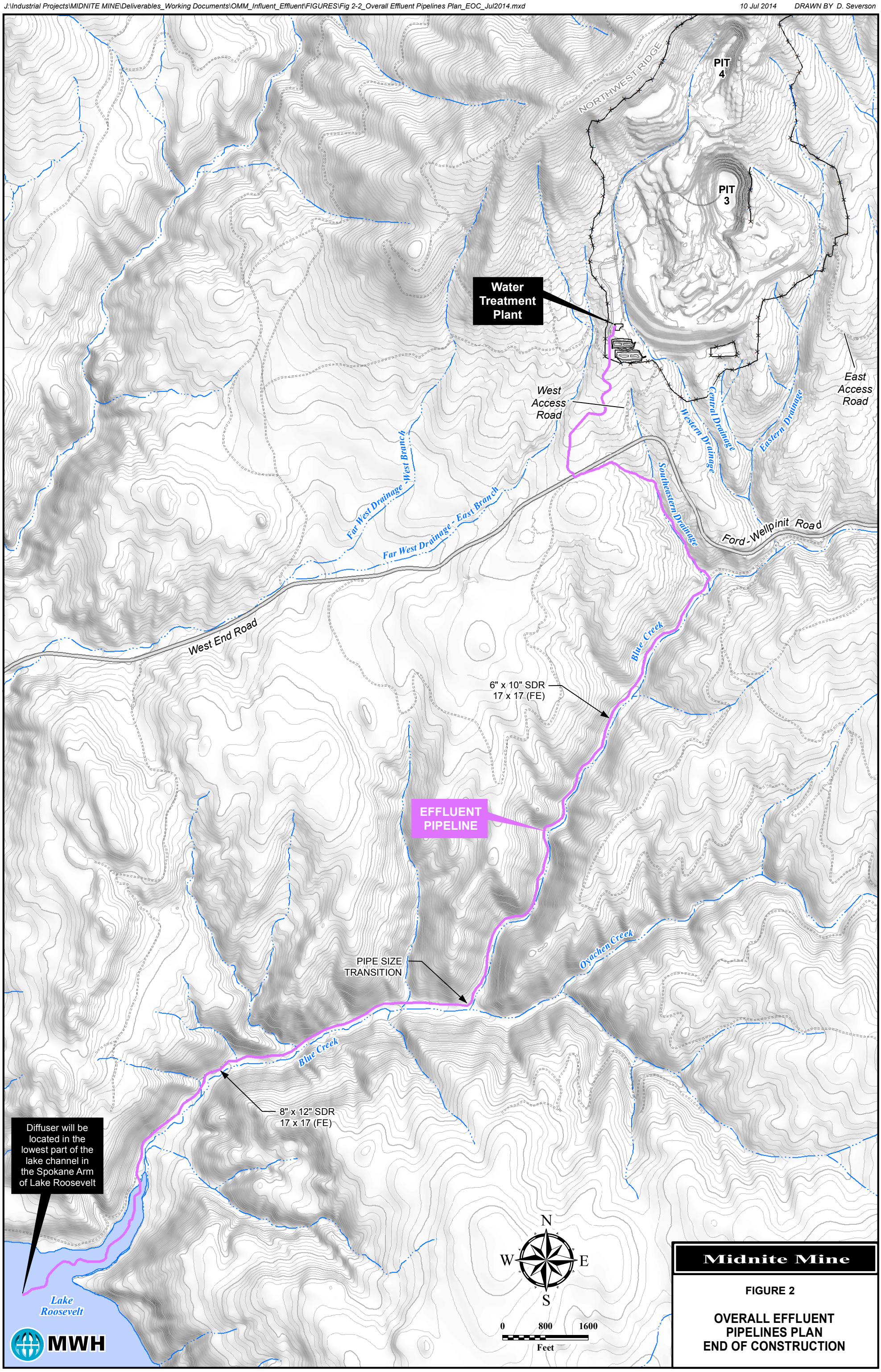

Midnite Mine

FIGURE 2

OVERALL EFFLUENT PIPELINES PLAN
END OF CONSTRUCTION

Attachment P-9

Routine Inspection and Maintenance for Dewatering, Underdrain, and Alluvial Groundwater Control Systems (Future Construction)

Midnite Mine Superfund Site
100 Percent Design

Underdrain, Waste Rock and BPA Dewatering Systems and Alluvial Groundwater Control Systems – Operation, Maintenance, and Monitoring Plan

June 2015

Prepared for:

Dawn Mining Company
PO Box 250
Ford, Washington 990413

and

Newmont USA Limited
6363 South Fiddler's Green Circle
Greenwood Village, Colorado 80111

Prepared By:

MWH Americas, Inc.
2890 E. Cottonwood Parkway, Suite 300
Salt Lake City, UT 84121

TABLE OF CONTENTS

1.0 INTRODUCTION 1

1.1 PURPOSE, SCOPE, AND OBJECTIVES 2

2.0 DESIGN AND OPERATION OF THE PIT UNDERDRAIN, WASTE ROCK AND BPA DEWATERING SYSTEM AND THE ALLUVIAL GROUNDWATER CONTROLS SYSTEM 2

2.1 WASTE ROCK DEWATERING AND UNDERDRAIN SYSTEMS 3

2.1.1 Lower Underdrain Dewatering System 3

2.1.2 Upper Waste Rock Dewatering System 4

2.1.3 Underdrain Down Time 4

2.2 BPA DEWATERING SYSTEM 5

2.3 ALLUVIAL GROUNDWATER CONTROLS 6

3.0 UNDERDRAIN, WASTE ROCK, AND BPA DEWATERING SYSTEMS, AND ALLUVIAL GROUNDWATER CONTROL SYSTEM - OPERATION, MAINTENANCE AND MONITORING 7

3.1 UNDERDRAIN, WASTE ROCK, and bpa DEWATERING SYSTEM OPERATION 8

3.2 ALLUVIAL GROUNDWATER CONTROL SYSTEM OPERATION 8

3.3 UNDERDRAIN, WASTE ROCK, and BPA DEWATERING SYSTEMS - INSPECTION AND MONITORING 8

3.4 ALLUVIAL GROUNDWATER CONTROL SYSTEM - INSPECTION AND MONITORING 9

3.5 MAINTENANCE OF UNDERDRAIN,WASTE ROCK, and BPA DEWATERING SYSTEM 10

3.5.1 Pumps 10

3.5.2 Water Level Monitoring Equipment 10

3.6 MAINTENANCE OF ALLUVIAL GROUNDWATER CONTROL SYSTEMS 11

3.6.1 Pumps 11

3.6.2 Water Level Monitoring Equipment 11

3.6.3 Vegetation Maintenance 11

4.0 RECORD KEEPING AND REPORTING 11

4.1 GENERAL 11

4.2 REPORTING 12

5.0 REFERENCES 12

LIST OF TABLES

Table 1 Estimated Time Period to Flood Drain Rock

Table 2 Operation, Maintenance, and Monitoring Summary – Pit 3/Pit 4 Waste Rock Dewatering and Underdrain System

Table 3 Operation, Maintenance, and Monitoring Summary – Alluvial Groundwater Control Systems

LIST OF FIGURES

Figure 1 Pit 3/Pit 4 Waste Rock Underdrain, Dewatering and Alluvial Groundwater Control System Well Head Vault Locations

LIST OF ACRONYMS

BODR	Basis of Design Report
BPA	backfilled pit area
CD	Consent Decree
DMC	Dawn Mining Company, LLC
DOPM	DMC Operating Procedures Manual
EPA	U.S. Environmental Protection Agency
HDPE	high density polyethylene
ODA	Other Disturbed Area
OM&M	Operation, Maintenance and Monitoring
PCP	Pollution Control Pond
PVC	Polyvinyl chloride
RA	remedial action
ROD	Record of Decision
Site	Midnite Mine Superfund Site
SLCB	slag-cement bentonite
SMP	Site-Wide Monitoring Plan
Tribe	Spokane Tribe of Indians
WTP	water treatment plant

1.0 INTRODUCTION

A variety of groundwater pump back systems will be required to comply with the Consent Decree (CD; EPA, 2011) requirements to contain and treat contaminated water on Midnite Mine Superfund Site (Site) prior to offsite discharge. Three systems will be used to capture groundwater prior to treatment. These systems are:

- Underdrain and Waste rock dewatering pump back systems will be needed for the collection and conveyance of mine-affected water from Pit 3/Pit 4 to the Water Treatment Plant (WTP) during the remedial action (RA) at the Site. During the RA construction, one underdrain pump back system consisting of two side-by-side wells and one waste rock dewatering pump back system consisting of two side-by side wells will be constructed and operated in both Pit 3 and Pit 4.
- One existing extraction well installed within the Boyd Pit waste rock (GW-54) will be used to dewater the Backfilled Pit Area (BPA) and a redundant well will be installed as a backup in case of maintenance issues with GW-54.
- In addition, an alluvial groundwater controls system consisting of a collection trench and a downgradient low permeability barrier wall will be installed in each of the drainages at the Site (i.e., the Western, Central, and Eastern Drainages). This alluvial groundwater collection system is intended to intercept impacted groundwater in the alluvial and shallow extremely-weathered bedrock and convey it for treatment to the WTP.

These systems will be operated during both the RA construction period and into the long-term operations and monitoring period following completion of the RA construction. This plan presents the operation, maintenance, and monitoring (OM&M) activities for the waste rock dewatering and underdrain pump back systems, as well as the alluvial groundwater control systems in each of the drainages that will be constructed during the RA. The locations of these systems are shown in Figure 1.

As currently planned, implementation of the Selected Remedy will be conducted in three distinct phases with individual components of the overall remedy completed during each phase. As a result, Waste Rock Dewatering and Underdrain System OM&M activities will be necessary from the time waste placement in Pit 4 is initiated during Phase 1, through the start of Pit 3 dewatering in Phase 2 as the backfilling of waste begins, and into the post-remedy monitoring

period. Alluvial groundwater control system OM&M activities will begin in Phase 1 and continue into the post-construction monitoring period.

This Waste Rock Dewatering, Underdrain, and Alluvial Groundwater Control Systems OM&M Plan is an attachment to the *Midnite Mine Superfund Site Operation, Maintenance, and Monitoring Plan*, which describes the OM&M for all of the components of the Selected Remedy, which will require monitoring and maintenance.

1.1 PURPOSE, SCOPE, AND OBJECTIVES

This Waste Rock and BPA Dewatering, Underdrain, and Alluvial Groundwater Controls System OM&M Plan describes the inspection, maintenance and monitoring activities, and to establish frequencies for this work. The primary objectives of this plan are to:

- Monitor and maintain the waste rock dewatering and underdrain systems relative to specific design criteria (i.e., upper and lower water elevations) using water-level monitoring equipment.
- Monitor and maintain the Boyd Pit extraction well (GW-54) relative to specific design criteria (i.e., upper and lower water elevations) using water-level monitoring equipment.
- Monitor and maintain the alluvial groundwater control systems relative to specific design criteria (i.e., upper and lower water elevations) using water-level monitoring equipment.
- Monitor and maintain submersible pumps installed in all of these systems.

To meet these objectives, this Waste Rock Dewatering, Underdrain, and Alluvial Groundwater Controls OM&M Plan includes the following:

- Identification of the system components that require routine inspection, monitoring, and maintenance
- Documentation of procedures for inspection and maintenance of these components
- Listing of reporting requirements

Performance monitoring requirements for monitoring wells associated with these systems is presented in the Site-wide Monitoring Plan (SMP) which is attached to the Midnite Mine 100 Percent Basis of Design Report (MWH, 2015).

2.0 DESIGN AND OPERATION OF THE PIT UNDERDRAIN, WASTE ROCK AND BPA DEWATERING SYSTEM AND THE ALLUVIAL GROUNDWATER CONTROLS SYSTEM

This section of the Waste Rock Dewatering, Underdrain, and Alluvial Groundwater Controls OM&M Plan provides a description of the individual dewatering systems to be constructed during the RA.

2.1 WASTE ROCK DEWATERING AND UNDERDRAIN SYSTEMS

Currently, impacted water is stored in Pit 3 and Pit 4 prior to treatment at the existing WTP. Over the course of the RA, these pits will be backfilled, and groundwater that enters the underdrain and meteoric water that falls on the backfilled waste before it is capped will be collected and conveyed to the WTP. The design and materials of construction for the Pit 3 and Pit 4 waste rock dewatering and underdrain systems are identical and details are present below.

Pit 3 and Pit 4 will have two similar systems for capture and pump back of mine affected water. The lower system is referred to as the underdrain dewatering system and the upper system is referred to as the sub-waste rock dewatering system. To the extent practicable, water will be kept from accumulating in Pit 3 and Pit 4 during and after consolidation of waste within the pit.

2.1.1 Lower Underdrain Dewatering System

Following removal of the sediment from each of the pits during the RA, bedrock will be excavated using heavy equipment, blasting, or other mean necessary, to create a discrete approximately 20 foot by 20 foot (square) by 20 foot (deep) sump. Sumps in both pits contain two vertical risers that will be installed for the removal of groundwater. This lower underdrain dewatering system's purpose is to collect groundwater before it contacts the overlying reactive mine waste backfill in the pits.

Groundwater accumulating in the underdrain sump will be isolated between high and low water levels which effectively confines the water removal to the excavated sump itself and keeps the overlying drain gravel drained. Water collecting in these sumps will be conveyed by pumping through the vertical risers which penetrate the cover system and is piped the WTP for treatment. The underdrain sump risers will be constructed from stainless-steel well casing, which during construction will be incrementally extended and remain above the backfill surface as waste is being placed in both Pit 4 and Pit 3. Stainless steel well casing will be used for the dewatering risers because of its superior strength, which will allow it to withstand anticipated loadings from

the waste backfill (relative to other corrosion resistant pipe materials such as PVC and HDPE piping). In addition, the stainless steel specified will be much less susceptible to corrosion relative to other high-strength pipe materials.

Because this lower dewatering zone has to convey groundwater inflows effectively, it will be constructed from coarse, non-reactive, highly conductive rock in the excavated sump and similarly permeable gravel overlying the sump drain rock. These materials will be crushed and screened to the specified size from the Hillside Waste Rock Pile. The drain gravel will be placed in the bottom of each pit to depth which varies depending on the pit geometries. The underdrain sump dewatering system design is shown on Drawings 4-12/4-81 (Pit 4) and Drawings 4-37/4-39 (Pit 3).

2.1.2 Upper Waste Rock Dewatering System

A geomembrane liner (i.e., a sub-waste liner) will be placed on the surface of the underdrain drain rock/gravel to isolate this lower underdrain system from seepage and sediment transport through the overlying waste rock. Any meteoric water collecting on the geomembrane will be conveyed by pumping from a sump in the sub-waste liner through a vertical riser (a waste rock dewatering well) to piping that delivers the water to the WTP for treatment. The waste rock dewatering risers will be constructed from materials and maintained during construction similar to the vertical risers used for the underdrain dewatering system discussed above. The configuration of the Pit 3 and 4 underdrain and sub-waste liner dewatering systems are shown Drawings 4-13 thru 4-15 (Pit 4) and 4-40 thru 4-41 (Pit 3).

The underdrain and waste rock liner sumps will be dewatered using submersible pumps installed within the backfilled sump. The well-discharge pipes for both the underdrain and sub-waste liner systems will be extended in coordination with the extension of well casings so as to remain above the backfill surface as waste is being placed in Pit 4 and Pit 3. Duplicate dewatering risers, including pumps and piping, will be installed to avoid shutdowns in the dewatering system due to maintenance or mechanical failure during the RA and long-term operations and monitoring period. Therefore, in each of the backfilled pits there will be two wells installed in the underdrain position (the sumps) and two wells installed above the sub-waste liner.

2.1.3 Underdrain Down Time

Concern has been raised about the time period that the underdrain system can be off-line before water entering the backfilled pits fills the drain rock and encounters the overlaying waste

rock. Several considerations are important when discussing the length of time that is necessary to correct a problem encountered in the lower underdrain dewatering system, including complete failure of the pumping system (the maintenance response time). The lower dewatering systems in both Pit 3 and 4 maintain the groundwater level in the excavated sump at a minimum of 20 feet beneath the subwaste liner and overlying waste rock.

First, there is a redundant pump and vertical dewatering well in the underdrain dewatering sumps in both pits. So it is highly unlikely that both pumps and their sumps would fail at the same time. Secondly, if both wells fail in one of the underdrain systems, then the overlying drain gravel will have to be saturated before the backfilled waste rock would be encountered. The existing pits effectively create a bathtub to contain the rising groundwater. The Table 1 shows the storage capacity (gallons) in each pit and the assumed porosity, the groundwater inflow rate, and the length of time that would be necessary to fill this space.

Table 1 – Estimated Time Period to Flood Drain Rock

Pit Name	Porosity	Storage Capacity (gallons) approximate	Groundwater Inflow Rate (Gallons/min)	Time to Flood Waste Rock (days) approximate
Pit 4	30%	1,100,000	13.1	58
Pit 3	30%	370,000	17.5	15

2.2 BPA DEWATERING SYSTEM

Initially, two existing dewatering wells located in the BPA will be used to remove water from the BPA. Water levels maintained by the BPA dewatering system will be maintained at a level that minimizes hydraulic head in the BPA while also minimizing the potential for scaling and fouling of the dewatering system. The locations of these existing wells are shown on Drawing 4-9. These existing wells are located in the two main pits in the BPA complex: 1) GW-54 is located in the Boyd Pit and 2) GW-58 is located in Pit 2 West.

A BPA dewatering test program was completed to determine effectiveness of these two wells and to provide design information for a system of dewatering wells intended for long-term dewatering. This test program was conducted in accordance with the approved *Backfilled Pits Area Pumping Plan* (WME, 2013). The objectives of the testing program were to evaluate:

- The operating condition of existing wells and equipment in Pit 2 and the Boyd Pit for use in initial dewatering of the BPA.
- The effects of varying water levels and pumping schemes on groundwater water levels within the waste rock backfill and surrounding bedrock to provide optimal water levels and dewatering well configurations for long-term dewatering of the BPA.

As indicated in the Work Plan, now that BPA dewatering has commenced, it will be continued throughout the design process, the RA construction, and after construction.

Based on preliminary results from the dewatering test program, BPA well GW-54 located in the Boyd Pit appears to provide the necessary hydraulic performance to dewater the entire BPA. Therefore, the BPA dewatering system will consist of a single groundwater extraction well, GW-54, located in the waste rock contained in the backfilled Boyd Pit. Over time, additional wells may be installed to provide redundancy to the dewatering system and allow for continued operation in the event of a well failure, similar to what is proposed for the Pit 3 and Pit 4 dewatering system. However, it is possible that when the cover is installed over the BPA, the groundwater influx to the BPA may be reduced to insignificant amounts because the source of water to the BPA has been cut off, and pumping could be discontinued or greatly reduced. In any case, water removed from the BPA by this well will be conveyed to the storage ponds (Pit 3, South Pond, West Pond, or WTP Pond) depending on the phase of RA construction at the time of removal followed by treatment at the WTP.

2.3 ALLUVIAL GROUNDWATER CONTROLS

Groundwater in the alluvium in the Western, Central, and Eastern Drainages has been identified as exceeding concentrations listed in Table 8-2 of the Record of Decision (ROD) (EPA, 2006). Alluvial pump back systems have been installed and currently are operating in these drainages as part of interim improvements to the water management system. The alluvial groundwater controls described in this OM&M Plan will replace those systems and will be located farther downstream in the Western, Central, and Far East Drainages as shown on Drawings 7-1 and 7-9.

The alluvial groundwater control system in each of these drainages will consist of an extraction trench installed immediately upslope of a low-permeability barrier wall. The extraction trench will be excavated through the alluvium, residual soils and extremely-weathered bedrock to the point of hydraulic excavator refusal in competent bedrock downgradient of the Mine Area. The low-permeability barrier wall will be installed, also to depths corresponding to excavator refusal

in competent bedrock immediately downgradient of the extraction trench to increase capture efficiency.

The extraction trenches will be backfilled from the trench bottoms to the elevation of a level working platform with drain sand. Groundwater in the trench will be collected in slotted drain pipe installed near the bottom of the trench as shown on Drawings 7-5, 7-8, and 7-11. A vertical riser will be connected to the drain pipe near the low-point of the extraction trench. Groundwater will be extracted from the trenches by pumping intermittently via submersible pumps and discharge pipes installed in each of the pump risers. Initially, groundwater from the extraction trenches will be conveyed to the Pollution Control Pond (PCP), and from there it will be conveyed to the storage ponds and WTP. Once the PCP is decommissioned (in Phase 3), groundwater will be conveyed directly to the WTP Equalization Pond.

Low-permeability barrier walls will be constructed immediately downgradient of the extraction trenches, as shown on Drawings 7-3, 7-6, and 7-10, in order to increase the capture efficiency of the these trenches. The barrier wall will be excavated from a working platform through the underlying alluvium and weathered bedrock materials to a depth where practical excavator refusal is reached. The excavations will be continued into either valley wall as shown on the Drawings 7-4, 7-7, and 7-11 to the point where the working platform contact with the valley wall is reached. Although it is anticipated that the barrier walls will be constructed as slag-cement bentonite (SLCB) slurry walls, it is possible that other methods (such as soil mixing) may be used. Upon completion of the barrier wall, the wall will be allowed to harden to the point where it will not be damaged by backfilling and then covered with a minimum of 2 feet of soil to prevent damage due to desiccation or erosion. The ground surface in the work area then will be restored to its original contours, and areas of disturbance revegetated with native seed mix in accordance with project requirements.

3.0 UNDERDRAIN, WASTE ROCK, AND BPA DEWATERING SYSTEMS, AND ALLUVIAL GROUNDWATER CONTROL SYSTEM - OPERATION, MAINTENANCE AND MONITORING

Underdrain and Waste Rock Dewatering Systems and Alluvial Groundwater Control System OM&M will be performed from the time of Pit 4 backfilling is commenced (in Phase 1) and into long-term operation and monitoring. Observation and documentation through inspection reports will enable prompt repair scheduling and execution of pond repair or maintenance. The

monitoring plan, including the individual monitoring tasks, schedule, monitoring criteria, and maintenance, is discussed below.

Access to the general vicinity of these facilities will be via the existing site roads and later by the permanent access roads. In those cases where the facilities are not immediately adjacent to the existing site or permanent access roads, final access will be via foot.

3.1 UNDERDRAIN, WASTE ROCK, AND BPA DEWATERING SYSTEM OPERATION

Groundwater from the Pit 3/Pit 4 underdrain and waste rock dewatering systems as well as groundwater from the BPA dewatering system will be transferred to storage ponds or the WTP via pumps and conveyed initially by temporary influent pipelines. At the conclusion of RA construction, the water will be conveyed via permanent influent pipelines to the new WTP. Details regarding the OM&M of these pipelines are presented in the *WTP Influent and Effluent Pipelines OM&M Plan* (MWH, 2015) which is included as an attachment to the *Midnite Mine Superfund Site Operation, Maintenance, and Monitoring Plan*.

Operation of the underdrain, waste rock, and BPA dewatering systems will be performed in accordance with a new DMC Operating Procedures Manual (DOPM) that will be prepared prior to the initiation of Phase 1 of the RA.

3.2 ALLUVIAL GROUNDWATER CONTROL SYSTEM OPERATION

Water from the alluvial groundwater control pump back systems will initially be conveyed to the PCP, and from there it will be conveyed to the storage ponds and WTP. Once the PCP is decommissioned (in Phase 3), groundwater will be conveyed directly to the WTP Equalization Pond.

Operation of the alluvial groundwater control pump back systems will be performed in accordance with a new DOPM that will be prepared prior to the initiation of Phase 1 of the RA.

3.3 UNDERDRAIN, WASTE ROCK, AND BPA DEWATERING SYSTEMS - INSPECTION AND MONITORING

The monitoring requirements for the Pit 3/Pit 4 waste rock dewatering, underdrain pump back, and BPA dewatering pump back systems are summarized in Table 2. Vehicular access along existing site roads and later along permanent access roads will allow observation of these

systems. The Pit 3/Pit 4 underdrain and waste rock dewatering systems and BPA dewatering system will be subjected to the following inspections and monitoring requirements:

1) Routine Inspection:

    a. Waste Rock Underdrain / Dewatering Vaults – the surface completions will be inspected for damage.

    b. BPA Dewatering Wells – the surface completion will be inspected for damage.

    c. Pumps – the submersible pumps will be periodically inspected for signs of wear

    d. Water Level Monitoring Equipment – Equipment used for monitoring of water levels in the waste rock dewatering and underdrain extraction risers will be checked for proper operation.

2) Routine Measurements:

    a. Survey elevation of Waste Rock Underdrain / Dewatering Vaults

    a. Water Level Monitoring

    b. Flow Rates to individual extraction pumps.

The monitoring frequency and unacceptable conditions (action triggers) for each of these monitoring metrics are summarized in Table 2 along with the associated (maintenance) response action. Please note that because there are redundant vertical risers in both the underdrain and the waste rock sumps the urgency of repairs is not as stringent as some of the other designed elements which require monitoring and maintenance or repairs. Also refer to Table 1 that summarizes the worst case scenario in the Pits 3 and 4 underdrain system when it is assumed that both the primary dewatering well and its backup are down for repair.

3.4 ALLUVIAL GROUNDWATER CONTROL SYSTEM - INSPECTION AND MONITORING

The monitoring requirements for the alluvial groundwater control pump back systems are summarized in Table 3. The alluvial groundwater control pump back systems will be subjected to the following inspections and monitoring requirements:

3) Routine Inspection:

    c. Pump Vaults – the surface completions will be inspected for damage.

    d. Pumps – the submersible pumps will be periodically inspected for signs of wear

e. Water Level Monitoring Equipment – Equipment used for monitoring of water levels in the alluvial groundwater control extraction risers will be checked for proper operation.

f. Surface vegetation. This inspection is to observe and document the establishment of vegetation on the disturbed areas that will require revegetation. This inspection to include noxious weed surveys.

4) Routine Measurements:

a. Vegetation Survey

b. Water Level Monitoring

c. Flow Rates to individual extraction pumps.

The monitoring frequency and unacceptable conditions (action triggers) for each of these monitoring metrics are summarized in Table 3 along with the associated (maintenance) response action.

3.5 MAINTENANCE OF UNDERDRAIN,WASTE ROCK, AND BPA DEWATERING SYSTEM

The purpose of the maintenance procedures for the underdrain and waste rock dewatering systems (including the BPA dewatering system) is to ensure that these systems perform as designed and that maintenance activities ensure their long-term integrity and viability. This is accomplished by ensuring the materials and maintenance practices are consistent with the final design and specifications. Below the maintenance activities for the underdrain and waste rock dewatering systems are presented.

3.5.1 Pumps

Depending on water chemistry, submersible pumps can be susceptible to fouling. In addition, pump components are susceptible to normal wear and tear during operation. Maintenance of the submersible pumps will be conducted in accordance with manufacturer's recommendations.

3.5.2 Water Level Monitoring Equipment

Pressure transducers in the waste rock dewatering risers will be checked periodically for proper operation in accordance with manufacturer's recommendations.

3.6 MAINTENANCE OF ALLUVIAL GROUNDWATER CONTROL SYSTEMS

The purpose of the maintenance procedures for the alluvial groundwater control systems is to ensure that these facilities perform as designed and that maintenance activities ensure their long-term integrity and viability. This is accomplished by ensuring the materials and maintenance practices are consistent with the final design and specifications. Below the maintenance activities for the alluvial groundwater control systems are presented.

3.6.1 Pumps

Depending on water chemistry, submersible pumps can be susceptible to fouling. In addition, pump components are susceptible to normal wear and tear during operation. Maintenance of the submersible pumps will be conducted in accordance with manufacturer's recommendations.

3.6.2 Water Level Monitoring Equipment

Pressure transducers in the alluvial groundwater extraction risers will be checked periodically for proper operation in accordance with manufacturer's recommendations.

3.6.3 Vegetation Maintenance

Revegetated areas may require maintenance to ensure success criteria are met and maintained for percent cover and plant density as identified on Table 3. Initial revegetation of the disturbed areas surrounding the individual alluvial groundwater control systems is described in the *Revegetation Plan* attached to Appendix D of the Basis of Design Report (BODR; MWH, 2015). In the event that noxious weeds become established in revegetated areas, control practices will be implemented.

Chronically poor plant growth may signal a need for fertilization or amendments to improve soil conditions. In the event of vegetative die-off or stress, the soils will be evaluated and treated to revitalize vegetation. If necessary, a plan for the application of such nutrients or soil amendments will be submitted for approval to EPA and the Tribe.

4.0 RECORD KEEPING AND REPORTING

4.1 GENERAL

Documentation of Waste Rock Dewatering, Underdrain, and Alluvial Groundwater Control System OM&M activities will be completed and retained pursuant to the requirements of the CD (EPA, 2011).

4.2 REPORTING

In accordance with the *Midnite Mine Superfund Site Operation, Maintenance, and Monitoring Plan,* to which this plan is attached, an annual summary report of the monitoring and maintenance activities will be prepared pursuant to all Site OM&M activities related to:

- Cover System and other disturbed areas (ODAs) Inspection and Maintenance
- Midnite Water Treatment Plant
- Fence Inspection and Maintenance
- Site Access Roads and Culverts
- Surface Water Diversions
- Alluvial Groundwater Controls
- Ponds and Tanks
- WTP Influent and Effluent Pipelines
- Pit Area Dewatering and Underdrain Wells

This yearly summary report will be transmitted to the EPA by March 31 annually, summarizing the prior year's activities.

5.0 REFERENCES

MWH Americas, Inc. (MWH), 2015. Midnite Mine Superfund Site 100 Percent Basis of Design Report. Prepared on behalf of Newmont USA Limited and Dawn Mining Company for submittal to U.S. Environmental Protection Agency, Region 10. June.

U.S. Environmental Protection Agency (EPA), 2006. Midnite Mine Superfund Site Spokane Indian Reservation, Washington Record of Decision. Prepared by the Office of Environmental Cleanup, EPA Region 10. September.

U.S. Environmental Protection Agency (EPA), 2011. Consent Decree Statement of Work for the Remedial Action for the Midnite Mine Superfund Site, Spokane Indian Reservation, Washington. Civil Action No. CV-05-020-JLQ. United States of America, Plaintiff v. Dawn Mining Company, LLC and Newmont USA Limited, Defendants. August.

Worthington Miller Environmental (WME), 2013. Technical Memorandum – Backfilled Pits Area Pumping Plan Midnite Mine, Revision 3. Prepared for U.S. EPA Region 10. May 17.

TABLES

TABLE 2
PIT 3/PIT 4 UNDERDRAIN, WASTE ROCK DEWATERING AND BPA DEWATERING SYSTEMS - MIDNITE MINE
OPERATION, MAINTENANCE, AND MONITORING SUMMARY

Post-Remedial Monitoring Element[1]	Measurement/Inspection	Activity Frequency	Action Trigger/Unacceptable Condition	Response Action
Routine Inspections	Water Level Monitoring Equipment	Monthly	Transducers fail to record data	Repairs / maintenance will be prioritize, scheduled and completed within 30 days. Maintenance and repair activities will be in accordance with manufacturer's recommendations.
	Pumps	Quarterly	Change in discharge flowrates, increase in pump discharge pressures, changes in electrical draws outside of manufacturer listed ranges.	Repairs / maintenance will be prioritize and scheduled within 30 days then completed within 30 days. Maintenance and repair activities will be in accordance with manufacturer's recommendations. Evaluations may include video logging of individual risers to determine if well screen has become plugged.
	Surface Completions (Vaults for Pit3/Pit 4 system; Aboveground Wellhead Completions for BPA)	Quarterly	Damage to surface completions or components	Repairs / maintenance will be prioritize and scheduled within 30 days then completed within the field season.
RoutineMeasurements	Flow Rate from Individual Underdrain or Waste Rock Dewatering Pumps	Monthly	Significant decrease in flow rate from previous monitoring period.	Engineering evaluation and determine corrective action on case-by-case basis based on results of engineering evaluation.
	Survey of Surface Completions	Quarterly for first 5 years, annually thereafter.	The deformation analyses indicate that long-term settlements of 0.01(1.5%) of the mine waste fill height can be expected. Based on this estimate, the Action Trigger/Unacceptable condition for settlement at each settlement monitoring location will vary. Upon completion of construction, the acceptable settlement will be calculated based on the as-built waste thickness at the settlement point location for a maximum vertical strain of 1.5%.	Engineering evaluation and determine corrective action on case-by-case basis based on results of engineering evaluation.
	Water Level Monitoring	Monthly	Water level outside acceptable operating range	Engineering evaluation and determine corrective action on case-by-case basis based on results of engineering evaluation.

Notes:
[1] This list of monitoring and maintenance elements apply to Pit 3 and Pit 4 underdrain and waste rock dewatering risers and BPA dewatering well GW-54.

TABLE 3
ALLUVIAL GROUNDWATER CONTROL SYSTEMS - MIDNITE MINE
OPERATION, MAINTENANCE, AND MONITORING SUMMARY

Post-Remedial Monitoring Element[1]	Measurement/Inspection	Activity Frequency	Action Trigger/Unacceptable Condition	Response Action
Routine Inspections	Water Level Monitoring Equipment	Monthly	Transducers fail to record data	Repairs / maintenance will be prioritize, scheduled and completed within 30 days. Maintenance and repair activities will be in accordance with manufacturer's recommendations.
	Pumps	Quarterly	Change in discharge flowrates, increase in pump discharge pressures, changes in electrical draws outside of manufacturer listed ranges.	Repairs / maintenance will be prioritize, scheduled and completed within 30 days. Maintenance and repair activities will be in accordance with manufacturer's recommendations. Evaluations may include video logging of individual risers to determine if well screen has become plugged.
	Surface Completions (Vault)	Quarterly	Damage to surface completions or components	Repairs / maintenance will be prioritize and scheduled within 30 days then completed within the field season.
	Vegetation	Surface vegetation monitoring will be performed during each growing season (annually) until revegetation success criteria are met at this point monitoring will be discontinued. [2]	Signs of vegetation success and failure will be observed based on a visual inspection.	Review below under routine measurements - vegetation survey
RoutineMeasurements	Flow Rate from Individual Alluvial GW Control Risers	Monthly	Significant decrease in flow rate from previous monitoring period.	Engineering evaluation and determine corrective action on case-by-case basis based on results of engineering evaluation.
	Water Level Monitoring	Monthly	Water levels in downgradient monitoring wells not indicating inward gradient or decreasing water levels.	Engineering evaluation and determine corrective action (i.e. permeation grouting) on case-by-case basis based on results of engineering evaluation.
	Vegetation Survey	Surface vegetation monitoring will be performed during each growing season (annually) until revegetation success criteria are met at this point monitoring will be discontinued. [2]	Revegetation success criteria will be established following the 2014 HEP survey of the Rhoads Property and will include criteria for percent cover and woody plant density.	Areas of non-compliance will be assessed then as necessary retreat and/or reseed in the fall.

Notes:

[1] This list of monitoring and maintenance elements apply to the alluvial dewatering trenches (groundwater controls) in the East, Central and West drainages.

[2] The surveys will include identification of bare ground areas, which will be defined as areas greater than 250 ft2 containing less than 20% live cover and areas containing signs of uncontrolled erosion (e.g., rills and gullies, accumulations of sediment or debris).

Bare ground areas exhibiting less than 20% live vegetative cover for two successive seasons will be re-assessed for nutrients and other conditions that could cause vegetation failure. Pending the assessment results, the affected areas will be retreated and reseeded.

FIGURES

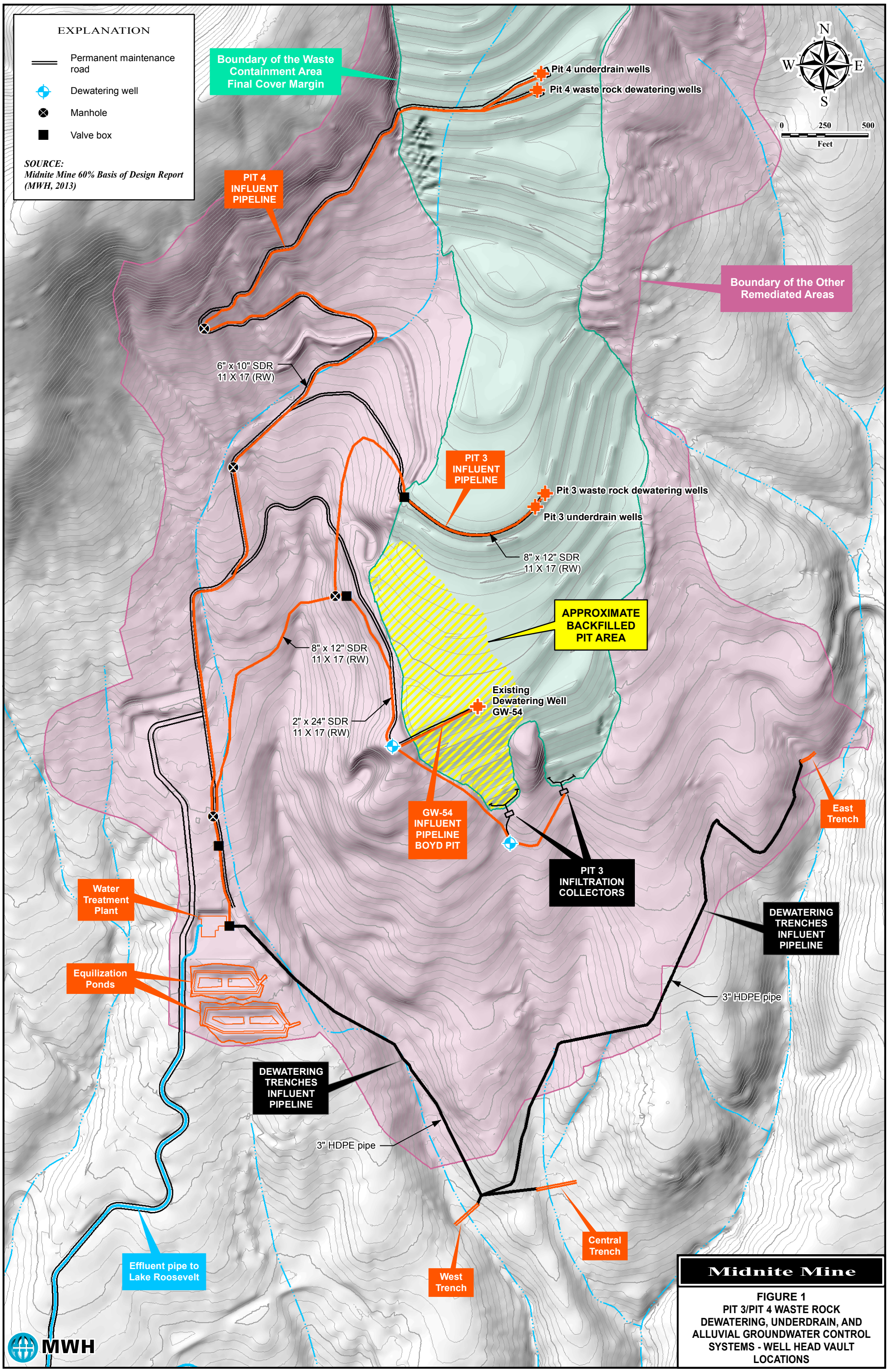
EXPLANATION
Permanent maintenance road
Dewatering well
Manhole
Valve box
SOURCE:
Midnite Mine 60% Basis of Design Report (MWH, 2013)
Boundary of the Waste Containment Area Final Cover Margin
Pit 4 underdrain wells
Pit 4 waste rock dewatering wells
N
W
E
S
0
250
500
Feet
PIT 4 INFLUENT PIPELINE
Boundary of the Other Remediated Areas
6" x 10" SDR
11 X 17 (RW)
PIT 3 INFLUENT PIPELINE
Pit 3 waste rock dewatering wells
Pit 3 underdrain wells
8" x 12" SDR
11 X 17 (RW)
APPROXIMATE BACKFILLED PIT AREA
8" x 12" SDR
11 X 17 (RW)
Existing Dewatering Well GW-54
2" x 24" SDR
11 X 17 (RW)
GW-54 INFLUENT PIPELINE BOYD PIT
PIT 3 INFILTRATION COLLECTORS
East Trench
Water Treatment Plant
DEWATERING TRENCHES INFLUENT PIPELINE
Equilization Ponds
3" HDPE pipe
DEWATERING TRENCHES INFLUENT PIPELINE
3" HDPE pipe
Central Trench
West Trench
Effluent pipe to Lake Roosevelt
MWH
Midnite Mine
FIGURE 1
PIT 3/PIT 4 WASTE ROCK DEWATERING, UNDERDRAIN, AND ALLUVIAL GROUNDWATER CONTROL SYSTEMS - WELL HEAD VAULT LOCATIONS

Attachment P-10

Routine Inspection and Maintenance of Cover Systems (Future Construction)

Midnite Mine Superfund Site
100 Percent Design

Attachment P10 – Cover System and Other Disturbed Areas – Operation, Maintenance, and Monitoring Plan

June 2015

Prepared for:

Dawn Mining Company
PO Box 250
Ford, Washington 990413

and

Newmont USA Limited
6363 South Fiddler's Green Circle
Greenwood Village, Colorado 80111

Prepared By:

MWH Americas, Inc.
2890 E. Cottonwood Parkway, Suite 300
Salt Lake City, UT 84121

TABLE OF CONTENTS

P1.0 INTRODUCTION **1**

P1.1 PURPOSE, SCOPE, AND OBJECTIVES **1**

P2.0 DESCRIPTION OF WCA COVER AND DISTURBED AREAS RECLAMATION **2**

P2.1 WASTE CONTAINMENT AREA COVER SYSTEM **2**

P2.2 OTHER DISTURBED AREAS **2**

P2.2.1 Flat-Lying Areas 3

P2.2.2 Steeper Disturbed Areas 3

P2.2.3 Existing Site Roads 4

P3.0 WASTE CONTAINMENT AREA COVER SYSTEM - OPERATION, MAINTENANCE AND MONITORING **4**

P3.1 COVER SYSTEM OVER WASTE CONTAINMENT AREA **5**

P3.2 OTHER DISTURBED AREAS **6**

P3.3 WCA - STORM WATER MANAGEMENT STRUCTURES MONITORING **7**

P3.4 MAINTENANCE OF WCA COVER AND ODAs **7**

P3.4.1 Erosion Damage 8

P3.4.2 Veneer Slope Instability 8

P3.4.3 Vegetation Maintenance 9

P3.4.4 Stormwater Management Structures 9

P3.5 ENGINEERING CONTROLS – PERIMETER FENCING **9**

P4.0 RECORD KEEPING AND REPORTING **10**

P4.1 GENERAL **10**

P4.2 REPORTING **10**

P5.0 REFERENCES **11**

LIST OF TABLES

Table 1 Operation, Maintenance, and Monitoring Summary – Waste Containment Area Cover System

Table 2 Operation, Maintenance, and Monitoring Summary – Other Disturbed Areas

Table 3 Operation, Maintenance, and Monitoring Summary –Storm Water Management System

Table 4 Operation, Maintenance, and Monitoring Summary – Site-Wide Engineering Controls, Perimeter Barrier

FIGURE

Figure 1 WCA Settlement Monitoring Point Locations

LIST OF ACRONYMS/ABBREVIATIONS

BODR	Basis of Design Report
BPA	backfilled pit area
EPA	U.S. Environmental Protection Agency
GDL	geocomposite drainage layer
LLDPE	linear low-density polyethylene
ODA	other disturbed area
OM&M	Operation, Maintenance and Monitoring
RA	remedial action
Site	Midnite Mine Superfund Site
Tribe	Spokane Tribe of Indians
WCA	waste containment area
WTP	water treatment plant

P1.0 INTRODUCTION

The Waste Containment Area (WCA) will be backfilled and capped as described in the Remedial Design for the Midnite Mine Superfund Site (Site). The areas adjacent to the WCA, known as other disturbed areas (ODAs), contain the mine wastes or contaminated soils that will be removed as part of the Selected Remedy and backfilled into the WCA. The ODAs will be reclaimed concurrently with final cover system construction in the WCA. Because these areas will have similar monitoring and maintenance activities following their construction, they both have been included in this plan. This plan then presents the operation, maintenance and monitoring (OM&M) activities for the WCA cover system that will be constructed and the associated ODAs that will be remediated and revegetated during the remedial action at the Site.

As currently planned, implementation of the Selected Remedy will be conducted in three distinct phases with individual components of the overall remedy completed during each phase. As a result, the Cover System and OM&M activities will be necessary from the time the WCA cover is installed on Pit 4 during Phase 1, through final installation of the Pit 3 cover system at the end of Phase 3, and into the post-remedy monitoring period. OM&M activities for other remedial elements that are under construction will be conducted in accordance with the *Remedial Action Site Wide Monitoring Plan* in *Appendix Q of the Basis of Design Report* (BODR; MWH, 2015).

This Cover System and ODAs OM&M Plan is an attachment to the *Midnite Mine Superfund Site Operation, Maintenance, and Monitoring Plan*, which describes the OM&M for all of the components of the Selected Remedy, which will require monitoring and maintenance.

P1.1 PURPOSE, SCOPE, AND OBJECTIVES

The purpose of this Cover System and ODAs OM&M Plan is to describe the inspection, maintenance and monitoring activities, and to establish frequencies for this work. The primary objectives of this plan are to:

- Monitor and maintain cover system relative to erosion
- Monitor and maintain cover system relative to veneer stability
- Monitor and maintain cover system to ensure vegetation success
- Monitor and maintain the cover system area stormwater diversion and runoff structures
- Monitor and maintain the cover system engineering controls

To meet these objectives, this Cover System OM&M Plan includes the following:

- Identification of the WCA Cover System and other disturbed areas that require inspection, monitoring, and maintenance
- Documentation of procedures for inspection and maintenance of these areas
- Listing of reporting requirements

P2.0 DESCRIPTION OF WCA COVER AND DISTURBED AREAS RECLAMATION

This section of the Cover System OM&M Plan provides a description of the various Site areas that will be disturbed during remedial action (RA) construction and require cover systems and/or revegetation. The various disturbance area locations discussed in this section are shown on Figure 1.

P2.1 WASTE CONTAINMENT AREA COVER SYSTEM

The WCA includes the areas where Site mine wastes will be or have been placed in Pits 3 and 4, the Backfilled Pit Area (BPA), and Area 5 as described in the BODR (MWH, 2015). A continuous surface cover will be constructed over the WCA as depicted on Figure 1. The cover will be revegetated to physically stabilize the surface cover. The proposed cover system in the WCA will consist of the following components:

1) Soil cover, with a total design soil-cover thickness of 3 feet comprising 2.5 feet of cover soil and 0.5 feet of topsoil or growth media.
2) Geomembrane layer consisting of a 40-mil (1.0 millimeter) thickness linear low-density polyethylene (LLDPE) with a textured top surface to be placed over mine waste surface and under the soil cover.
3) Geocomposite drainage layer (GDL) in areas where mine waste are sloped steeper than a 15 percent grade. The GDL will be installed between the soil and geomembrane layers to reduce potential pore water build up in the slope to enhance slope stability.

P2.2 OTHER DISTURBED AREAS

The ODAs at the Site are those areas adjacent to the WCA that either require revegetation where mine wastes (including contaminated soils) are excavated for WCA consolidation or areas where construction activities will result in removal of surface vegetation. The ODAs are

shown on Figure 1. These ODAs will be revegetated as described in the following paragraphs in an effort to return the Site to a condition that supports historic land uses. The Site ODAs have been categorized based upon topography and include: flat-lying areas (sloped at 3:1 horizontal to vertical [h:v] or flatter) and steeper areas (steeper than 3h:1v). Other ODAs requiring revegetation include the existing East and West haul roads and other existing Site roads that will be removed as part of the RA.

Mine waste in these ODAs will be excavated and transported to the WCA. Contaminated soil will be removed to a depth where either soil cleanup criteria are met or bedrock is encountered in the excavation, at which point excavation will be terminated. In order to support revegetation, a one-foot thick soil layer will be placed over ODAs where slopes are flatter than 2h:1v or where ODA waste cleanup results in excavations that expose bedrock on slope areas flatter than 2h:1v.

P2.2.1 Flat-Lying Areas

Relatively flat-lying areas will be revegetated in a similar manner regardless of whether cleanup excavations are terminated in native soil or bedrock, except for site preparation prior to seeding and planting. Areas excavated to bedrock will be ripped to a depth of 18 inches prior to placement of the one-foot surface soil layer. The soil layer will be scarified to a 12-inch depth to reduce equipment compaction and disked to a six inch depth as a final seedbed treatment prior to seeding and planting.

Areas where native soil remains after waste cleanup will be scarified to a 12- to 18-inch depth and then disked to a 6-inch depth as a final seedbed treatment prior to seeding and planting. Seeding of grasses and forbs in flat-lying areas will be by hydroseeding and hydromulching. Shrubs and trees will be planted as seedlings one year after seeding of grasses and forbs.

P2.2.2 Steeper Disturbed Areas

There are two types of steep ODAs that will require revegetation and long-term monitoring. The first are steep areas (steeper than 3h:1v, but flatter than 2h:1v) where either native soil or exposed bedrock may remain upon completion of waste and contaminated soil excavations. The second type of steep ODAs are steeper than 2h:1v slope, and are generally in areas of shallow bedrock. It is anticipated that waste excavations in this second type of steep area will expose bedrock during removal of waste material, but that the resulting slopes will be too steep for soil placement.

The ODAs steeper than 3h:1v, but flatter than 2h:1v will be ripped to an 18-inch depth prior to placement of the one-foot-thick surficial soil layer using the procedures described above for flat-lying areas. These areas will be scarified, disked, treated with soil amendments and hydroseeded and hydromulched as described above for flat-lying areas.

Exposed bedrock areas that are steeper than 2h:1v will be too steep to receive a soil cover and will not be seeded or planted. It is believed that these areas will become colonized with trees and shrubs over time as seed volunteers onto these areas from surrounding vegetation. This process of natural revegetation has already occurred on the Site since mining activities ceased.

P2.2.3 Existing Site Roads

Following removal of any contaminated material, the existing East and West Haul Roads and other Site roads that will not be maintained for future use will be ripped at least 18 inches in depth to eliminate roadway compaction and regraded to blend in with the surrounding topography. Contoured surfaces will be scarified to a depth of 12 inches and revegetated using the procedures discussed previously for flat lying areas.

P3.0 WASTE CONTAINMENT AREA COVER SYSTEM - OPERATION, MAINTENANCE AND MONITORING

Cover system OM&M will be performed from the time the final covers are installed in each of the WCAs (i.e., completion of the Pit 4 cover in Phase 1 and the Pit 3 cover in Phase 3 of the RA) and into post-remedy monitoring. Observation and documentation through inspection reports will enable prompt repair scheduling and execution of cover system repair or maintenance. The monitoring will include both visual inspection and surveying of the soil cover system and ODAs, the stormwater runoff management system, and any associated engineering controls to ensure system integrity is maintained. The monitoring plan, including the individual monitoring tasks, schedule, monitoring criteria, and maintenance, is discussed below.

Pit 3, Pit 4, the BPA, and Area 5 will be backfilled, covered with a composite cover system, and graded to form sloped soil cover surfaces where stormwater will flow to drainage bench channels oriented perpendicular to the slope that then will route clean stormwater off the cover and into newly constructed downdrain channels that report to site channels in the restored valley bottoms. These reconstructed site channels flow into natural drainages south of the Site. The Master Stormwater Management Plan in Appendix O of the BODR discusses the management, monitoring, and maintenance of the engineering controls that will be in place to

handle stormwater and sediment originating on these covered surfaces both during and after RA construction completion.

P3.1 COVER SYSTEM OVER WASTE CONTAINMENT AREA

The monitoring requirements for the WCA Cover System are summarized in Table 1. WCA cover system inspections will be performed to be protective of the cover system. Vehicular access along the dewatering well maintenance roads located on the capped WCA surface will allow the observations from multiple locations on the cap surface. Detailed inspection of any observed deficiencies observed from the roads (as shown on Figure 1) will be conducted on foot so as not to compromise the cover system. The WCA Cover System will be subjected to the following inspections and monitoring requirements:

1) Routine Inspection:

   a. Settlement monitoring - monuments installed throughout the WCA will be visually observed to determine if they are in working condition. Settlement will be monitored at 62 discrete locations on the WCA cover system as shown on Figure 1. A schematic for a typical settlement plate is illustrated in Figure 1.

   b. Signs of stormwater erosion/damage – the WCA surface will be observed to see if there is evidence of erosion/damage.

   c. Veneer stability - Soil surface conditions will be observed to determine if there has been mass movement of the soil surface.

   d. Cap surface vegetation - This inspection is to observe and document the establishment of vegetation on the WCA soil surface. The inspection also will include noxious weed surveys in accordance with the Revegetation Plan attached to Appendix D of the BODR.

   e. Wildlife damage – The cover surface will be visually inspected to determine if there is evidence of wildlife damage.

   f. Stormwater diversion controls (i.e., bench channels and downdrains) – The drainage benches and downdrains on the WCA cover will be observed to determine if they are operational.

2) 25 Year-24 hour Storm (2.2 inches of rain in a 24-hour period) or Seismic Event:

a. Non-routine inspections for signs of stormwater erosion/damage to the cap and stormwater diversion controls will commence within one day and completed within seven days after a:

1) 25-year, 24-hour storm event or

2) Seismic event greater than a magnitude 5.0 (Richter Scale) with an epicenter within 15 miles of the Site.

3) Routine Measurements:

a. Vegetation Survey

b. Settlement Survey

The monitoring frequency and unacceptable conditions (action triggers) for each of these monitoring metrics are summarized in Table 1 along with the associated (maintenance) response action.

P3.2 OTHER DISTURBED AREAS

The monitoring frequency and action trigger requirements for ODA surface grading and revegetation are summarized in Table 2. Because the ODAs are not underlain by a geosynthetic liner and are not covering contaminated materials, they are treated differently than the WCA as reflected in the type and frequency of monitoring in Tables 1 and 2. However, similar to the WCA, all inspections will be performed from nearby access roads that allow vehicular traffic (as shown on Figure 1) with detailed inspection of any observed deficiencies conducted on foot so as not to compromise the revegetated surface. ODA surface grading and revegetation will be subjected to the following inspections and monitoring requirements:

1) Routine Inspection:

a. Cap surface vegetation. This inspection to include noxious weed surveys in accordance with the Revegetation Plan attached to Appendix D of the BODR.

b. Erosion/damage from runoff

c. Wildlife damage

d. Damage to stormwater diversion controls (East, Central, and West Site Channels).

2) 25 Year-24 hour Storm (2.2 inches of rain in a 24-hour period):

a. Non-routine inspections for stormwater erosion/damage to the cover and stormwater diversion controls will commence within one day and completed within seven days after a 25-year, 24-hour storm event.

3) Routine Measurements:

a. Vegetation Survey

The unacceptable conditions (action triggers) for each of these monitoring metrics are summarized in Table 2 along with the associated (maintenance) response action.

P3.3 WCA - STORM WATER MANAGEMENT STRUCTURES MONITORING

The OM&M described below will be performed on the bench channels and downdrains on the WCA. Stormwater management on the WCA surface includes capture and conveyance systems that serve to: 1) minimize erosion and 2) divert stormwater from the cover areas so there is no infiltration using bench channels and downdrains to transfer stormwater into exhumed drainages so that it can drain freely from the Site.

The post-remedial monitoring and maintenance elements shown in Table 3 apply only to the stormwater runoff management infrastructure associated with the WCA cover system (i.e., bench channels, downdrains, and site channels immediately adjacent to the cover). These stormwater runoff controls will be subjected to the following inspections and monitoring requirements:

1) Routine inspection

a. Erosion/damage

b. Performance of stormwater diversion controls

Non-routine inspections for erosion/damage to stormwater runoff management infrastructure will commence within one day and be completed within seven days following a 25-year storm, 24-hour storm event. The unacceptable condition (action trigger) for each of these monitoring metrics is verified damage as identified by the visual inspections.

P3.4 MAINTENANCE OF WCA COVER AND ODAs

The purpose of the maintenance procedures for the WCA Cover System and ODAs is to ensure that these areas perform as designed and that maintenance activities do not affect the long-term integrity of the cover and vegetation. This is accomplished by ensuring the materials and maintenance practices are consistent with the final design and specifications. All repairs and/or

reconstruction shall be conducted in a manner that maintains the final cover system and ODAs surface grading integrity.

P3.4.1 Erosion Damage

Areas most susceptible to rill or gully formation are those steeper slopes around the perimeter of the WCA Cover System. In the event that rilling or gullying develops (as defined in Tables 1 through 3), repair procedures may include scarifying, regrading, cover soil placement, or placement of erosion matting, followed by re-establishment of vegetation. Corrective action repairs and maintenance will be prioritized following inspections indicating there are problems and scheduled within 30 days. The repairs then will be completed within the field season unless any of the observed damages could present an immediate threat to the WCA cover integrity. The Revegetation Plan attached to Appendix D of the BODR has procedures for establishment of vegetation on the soil covered surfaces including the applicable seed mixes and planting techniques.

P3.4.2 Veneer Slope Instability

Shallow translational (veneer) slope instability may develop especially in areas approaching 2h:1v where a one-foot thick surficial soil layer will be placed over bedrock to aide in vegetation establishment. On these steeper slopes, there is increased potential for slippage of the thin surficial soil layer down-slope. This type of slope movement (shallow translation failures) is often the result of the formation of a saturated soil layer at the bedrock interface during spring melt cycles and normally becomes less of a concern as vegetation is established on the reclaimed ground surface. Visual observations of cracks in soil surface typically at the slide origin (headwall) or long the margins of the slide, a bulged toe area, or groundwater seeps at slide toe are all indicative of downslope soil movement.

Repairing slope stability may entail regrading to reduce infiltration, or in some cases a partial reconstruction of the slopes with subsurface drains or the use of biostabilization (stabilization of surficial soil layers through use of deeper-rooted plant species). Corrective action to address material slippage laterally down slopes shall be completed within thirty days following discovery during an inspection event. Design specifications for the reconstruction activities in areas exhibiting persistent veneer slope movement shall be submitted to the EPA for review and approval within 90 days upon discovery of persistent conditions.

P3.4.3 Vegetation Maintenance

Revegetated areas may require maintenance to ensure success criteria are met and maintained for percent cover and plant density as identified on Tables 1 through 3. Initial revegetation of the capped surfaces is described in the *Revegetation Plan* attached to Appendix D of the BODR. In the event that noxious weeds become established in revegetated areas, control practices will be implemented

Chronically poor plant growth may signal a need for fertilization or amendments to improve soil conditions. In the event of vegetative die-off or stress, the cover soils will be evaluated and treated to revitalize cover vegetation. If necessary, a plan for the application of such nutrients or soil amendments will be submitted for approval to EPA and the Tribe.

P3.4.4 Stormwater Management Structures

The permanent bench channels and downdrains on the WCA will be observed to determine if there is structural damage and maintained free of debris and large vegetation. If structural damage or debris /vegetation is found in these structures during inspections it may result in inadequate drainage and require corrective action. Corrective action repairs and maintenance will be prioritized following inspections indicating there are problems and scheduled within 30 days. The repairs then will be completed within the field season unless any of the observed damages could present an immediate threat to the WCA cover integrity (see Table 4).

P3.5 ENGINEERING CONTROLS – PERIMETER FENCING

The purpose of the current engineering controls at the Site is to ensure site access is controlled through fences, entrance gate controls, site entrance logs, and warning signs. For the purposes of this Cover System OM&M Plan, the existing eight-foot high chain-link perimeter fence will remain intact until the vegetation has been reestablished enough to allow free ranging herbivores (primarily deer and elk) to access the revegetated surfaces. The acceptable vegetation coverage and conditions are detailed *Revegetation Plan* attached to Appendix D of the BODR. This could be three to five years following the implementation of the Selected Remedy completion of construction activities.

The removal of the perimeter fencing will only occur after agreements are reached with the Tribe approving removal of the perimeter fencing and how public access will be handled on the perimeter of the Site. Prior to removing the existing fence, a perimeter barrier consisting of a boulder barrier, jack-leg fence and gate system, or a combination of both will be established on

the perimeter of the WCA to allow deer and elk access to the Site, but prevent vehicular access on this controlled area. The monitoring requirements for the perimeter fencing and associated gates, signs, locks, etc. are summarized in Table 4.

These site engineering controls will be inspected semi-annually to ensure they remain functional. Should damage be observed, maintenance shall be conducted as soon as practicable to maintain the integrity of these engineering controls.

P4.0 RECORD KEEPING AND REPORTING

P4.1 GENERAL

Documentation of Cover System OM&M activities will be completed and retained pursuant to the requirements of the Consent Decree (CD; EPA, 2011).

P4.2 REPORTING

In accordance with the *Midnite Mine Superfund Site Operation, Maintenance, and Monitoring Plan,* to which this plan is attached, an annual summary report of the monitoring and maintenance activities will be prepared pursuant to all Site OM&M activities related to:

- Cover System and ODAs Inspection and Maintenance
- Midnite Mine Water Treatment Plant (WTP)
- Fence Inspection and Maintenance
- Site Access Roads and Culverts
- Surface Water Diversions
- Alluvial Groundwater Controls
- Ponds and Tanks
- WTP Influent and Effluent Pipelines
- Pit Area Dewatering and Underdrain Wells

This yearly summary report will be transmitted to the EPA by March 31 annually, summarizing the prior year's activities.

P5.0 REFERENCES

MWH Americas, Inc. (MWH), 2015. Midnite Mine Superfund Site 100 Percent Basis of Design Report. Prepared on behalf of Newmont USA Limited and Dawn Mining Company for submittal to U.S. Environmental Protection Agency, Region 10. June.

U.S. EPA, 2011. Consent Decree Statement of Work for the Remedial Action for the Midnite Mine Superfund Site, Spokane Indian Reservation, Washington. Civil Action No. CV-05-020-JLQ. United States of America, Plaintiff v. Dawn Mining Company, LLC and Newmont USA Limited, Defendants. August.

TABLES

TABLE 1

WASTE CONTAINMENT AREA COVER SYSTEM - MIDNITE MINE

OPERATION, MAINTENANCE, AND MONITORING SUMMARY

Post-Remedial Monitoring Element[1]	Measurement/Inspection	Activity Frequency	Action Trigger/Unacceptable Condition	Response Action
Routine Inspections	Settlement Monument	Quarterly	Damaged settlement monument based on visual inspection	Repairs / maintenance will be prioritize and scheduled within 30 days then completed within the field season unless any of the observed damages could present an immediate threat to the WCA cover integrity.
	Signs of Erosion/Damage from Runoff	Inspections will be performed quarterly until vegetation has been reestablished then inspection will be conducted annually.	Signs of excessive run-on/runoff erosion or other damage to the WCA cover, or sediment buildup. Erosion damage greater than 6 inches in depth and 20 feet in length or if vegetation has been destroyed due to erosion.	As Immediately Above
	Veneer Stability	As Immediately Above	Visual observations of cracks in soil surface, bulged toe area, or groundwater seeps at slide toe indicating soil movement downslope.	As Immediately Above
	Vegetation	Cover surface vegetation and cover soil depth monitoring will be performed during each growing season until revegetation success criteria are met, at this point monitoring will be discontinued.[2]	Signs of vegetation success and failure will be observed based on a visual inspection.	Review below under routine measurements - vegetation survey
	Wildlife Damage	Semiannually	Excessive wildlife activity causing damage to the cover.	As above in first response
	Stormwater Diversion Controls	Inspections will be performed quarterly until vegetation has been reestablished then inspection will be conducted annually.	Signs of structural damage to or sediment/debris buildup within bench channels and downdrains. Signs of ponding water to indicate damage or plugging of drainage bench subsurface collectors.	Stormwater diversion structures will be cleared of shrubs or other large vegetation. Structural damage (including potential plugging of drainage bench subsurface collectors) that is observed will be prioritize and scheduled within 30 days then completed within the field season unless any of the observed damages could present an immediate threat to the WCA cover integrity.
25-Year, 24-Hour Storm Event Inspections (2.2 inches of rain in 24 hours)	Signs of Stormwater Erosion	Commence within one day and completed with seven days of the triggering storm or seismic event except if not feasible due to inaccessibility to the site or snow cover (possible from November through May).	Signs of excessive cover erosion or other damage, or sediment buildup. Erosion damage greater than 6 inches in depth and 20 feet in length or if vegetation has been destroyed due to erosion.	As above in first response
	Stormwater Diversion Controls	As Immediately Above	Damage to or sediment / debris buildup within diversion control infrastructure.	As above in first response
Seismic Event Inspections (magnitude 5.0 earthquake within 15 miles)	Settlement Survey	As Immediately Above	Exceeds acceptable settlement amount based on evaluation by Engineer.	Engineering evaluation and repair of impacted cover areas.
Routine Measurements	Vegetation Survey	Cover surface vegetation and cover soil depth monitoring will be performed during each growing season until revegetation success criteria are met, at this point monitoring will be discontinued.[2]	Revegetation success criteria will be established following the 2014 HEP survey of the Rhoads Property and will include criteria for percent cover and woody plant density.	Areas of non-compliance will be assess, retreat and/or reseed as appropriate in the fall.
	Settlement Survey	Settlement monitoring will be performed semiannually for the first 5 years, then annually during the post-remedial period until the total cumulative movements are less than 0.03 foot vertically after which settlement monitoring will performed every 5 years.	The deformation analyses indicate that long-term settlements of 0.01(1.5%) of the mine waste fill height can be expected. Based on this estimate, the Action Trigger/Unacceptable condition for settlement at each settlement monitoring location will vary. Upon completion of construction, the acceptable settlement will be calculated based on the as-built waste thickness at the settlement point location for a maximum vertical strain of 1.5%.	Engineering evaluation and repair of impacted cover areas.

Notes:

[1] This list of post-remedial monitoring and maintenance elements apply to earthen covers over backfilled Pits 3 & 4, Area 5, and the BPA.

[2] The surveys will include identification of bare ground areas, which will be defined as areas greater than 250 ft2 containing less than 20% live cover and areas containing signs of uncontrolled erosion (e.g., rills and gullies, accumulations of sediment or debris). Bare ground areas exhibiting less than 20% live vegetative cover for two successive seasons will be re-assessed for nutrients and other conditions that could cause vegetation failure. Pending the assessment results, the affected areas will be retreated and reseeded.

TABLE 2
OTHER DISTURBED AREAS - MIDNITE MINE
OPERATION, MAINTENANCE, AND MONITORING SUMMARY

Post-Remedial Monitoring Element[1]	Measurement/Inspection	Activity Frequency	Action Trigger/Unacceptable Condition	Response Action
Routine Inspections	Signs of Erosion/Damage from Runoff	Semiannually	Signs of excessive erosion or other damage, or sediment buildup. Erosion damage greater than 3 inches in depth and 20 feet in length or if vegetation has been destroyed due to erosion.	Corrective action repairs and maintenance will be prioritized following inspections indicating there are problems and scheduled within 30 days. The repairs then will be completed within the field season.
	Vegetation	Surface vegetation monitoring will be performed during each growing season (annually) until revegetation success criteria are met at this point monitoring will be discontinued. [2]	Signs of vegetation success and failure will be observed based on a visual inspection.	Review below under routine measurements - vegetation survey
	Stormwater Diversion Controls	Semiannually	Damage to or sediment / debris buildup within diversion control infrastructure. Downdrains shall be cleared of shrubs or other large vegetation.	As above in first response
	Wildlife Damage	Semiannually	Excessive wildlife or insect activity causing damage to revegetated areas.	As above in first response
25-Year, 24-Hour Storm Event Inspections (2.2 inches of rain in 24 hours)	Signs of Stormwater Erosion	The monitoring will be commence within one day and completed with seven days of the triggering storm event except if not feasible due to inaccessibility to the site or snow cover (possible from November through May).	Signs of excessive run-on/runoff cap erosion or other damage, or sediment buildup. Erosion damage greater than 3 inches in depth and 20 feet in length or if vegetation has been destroyed due to erosion.	As above in first response
	Stormwater Diversion Controls	As Immediately above	Damage to or sediment / debris buildup within diversion control infrastructure.	As above in first response
Routine Measurements	Vegetation Survey	Surface vegetation monitoring will be performed during each growing season (annually) until revegetation success criteria are met at this point monitoring will be discontinued. [2]	Revegetation success criteria will be established following the 2014 HEP survey of the Rhoads Property and will include criteria for percent cover and woody plant density.	Areas of non-compliance will be Assess, retreat and/or reseed as appropriate in the fall.

Notes:

[1] This list of post-remedial monitoring and maintenance elements apply to revegetated areas adjacent to the Waste Containment Area as well as the East and West haul roads.

[2] The surveys will include identification of bare ground areas, which will be defined as areas greater than 250 ft2 containing less than 20% live cover and areas containing signs of uncontrolled erosion (e.g., rills and gullies, accumulations of sediment or debris).

Bare ground areas exhibiting less than 20% live vegetative cover for two successive seasons will be re-assessed for nutrients and other conditions that could cause vegetation failure. Pending the assessment results, the affected areas will be retreated and reseeded.

TABLE 3
WASTE CONTAINMENT AREA - STORM WATER MANAGEMENT SYSTEM
OPERATION, MAINTENANCE, AND MONITORING SUMMARY

Post-Remedial Monitoring Element[1]	Measurement/Inspection	Activity Frequency	Action Trigger/Unacceptable Condition	Response Action
Routine Inspections	Signs of Erosion/Damage to Structures from Runon/runoff	Inspections will be performed quarterly until vegetation has been reestablished then inspection will be conducted annually.	Signs of excessive run-on/run-off which damages or sediment buildup on the bench channels, downdrains, and in downstream Site channels	Repairs / maintenance will be prioritized following inspections indicating there are problems and scheduled within 30 days. The repairs or other maintenance then will be completed within the field season unless any of the observed damages could present an immediate threat to the WCA cover integrity.
	Stormwater Diversion Controls	Inspections will be performed quarterly until vegetation has been reestablished then inspection will be conducted annually.	Structural damage to the bench channels, downdrains, or site channels.	Stormwater diversion structures will be repaired and cleared of shrubs or other large vegetation. Repairs / maintenance will be prioritized following inspections indicating there are problems and scheduled within 30 days then completed within the field season unless any of the observed damages could present an immediate threat to the WCA cover integrity.
25-Year, 24-Hour Storm Event Inspections (2.2 inches of rain in 24 hours)	Signs of Stormwater Erosion	Commence within one day and completed with seven days of the triggering storm except if not feasible due to inaccessibility to the site or snow cover (possible from November through May).	Signs of excessive run-on/run-off or other damage, or sediment buildup.	As above in first response
	Stormwater Diversion Controls	Commence within one day and completed with seven days of the triggering storm except if not feasible due to inaccessibility to the site or snow cover (possible from November through May).	Damage to or sediment / debris buildup within diversion control infrastructure. Stormwater diversion structures shall be cleared of shrubs or other large vegetation.	As above in first response

Notes:
[1] This list of post-remedial monitoring and maintenance elements apply to the bench channels, downdrains, and site channels.

TABLE 4
SITE-WIDE ENGINEERING CONTROLS - PERIMETER BARRIER
OPERATION, MAINTENANCE, AND MONITORING SUMMARY

Post-Remedial Monitoring Element	Measurement/Inspection	Activity Frequency	Action Trigger/Unacceptable Condition	Response Action
Routine Inspections	Security Systems	Semi-Annually	Damaged or non-functioning security infrastructure (e.g., fences, signs, gates, etc.)	Repairs / maintenance will be prioritize and scheduled within 30 days then completed within the field season unless these conditions present an immediate threat to the WCA cover system.

FIGURE

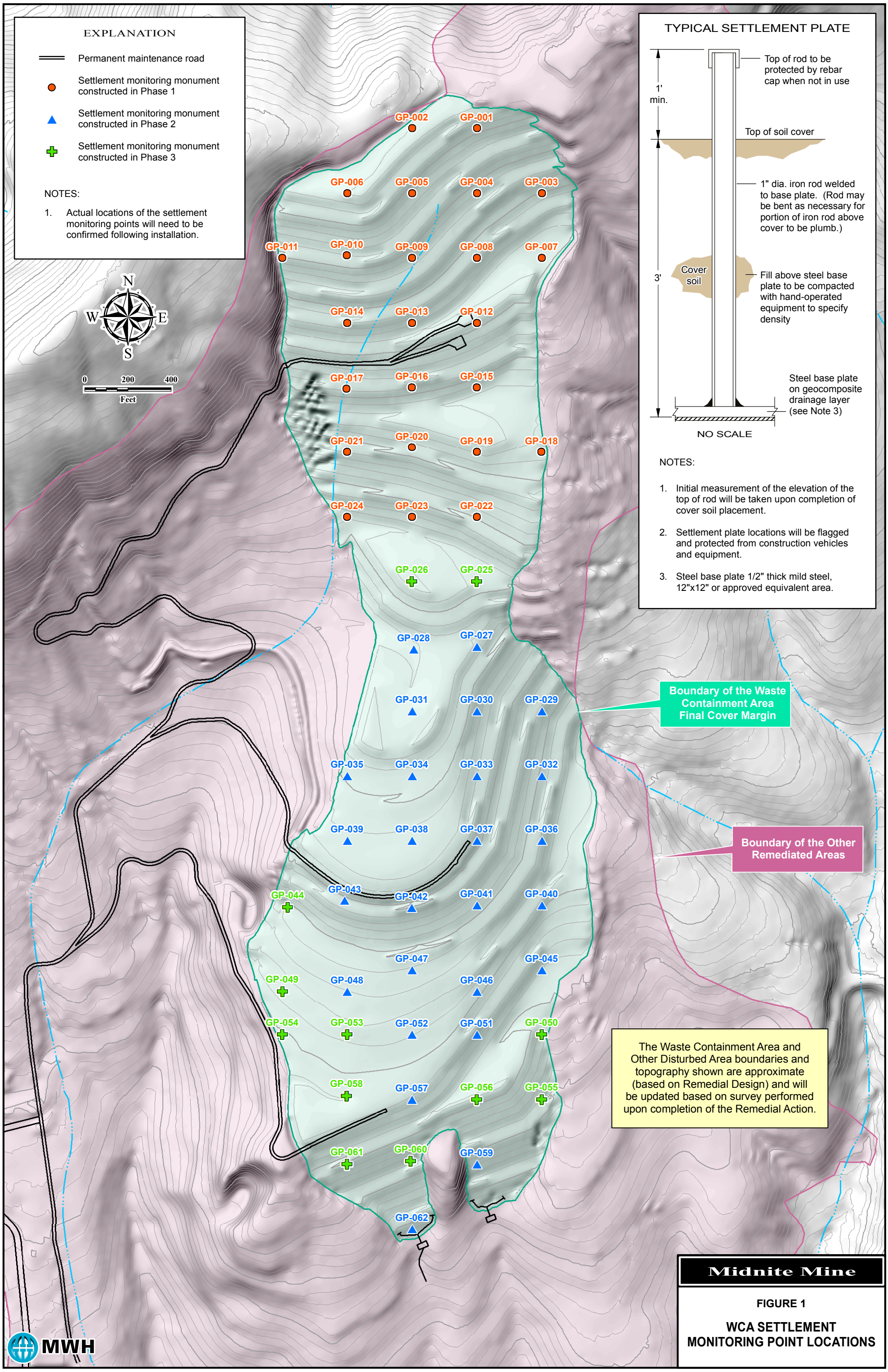
EXPLANATION
Permanent maintenance road
Settlement monitoring monument constructed in Phase 1
Settlement monitoring monument constructed in Phase 2
Settlement monitoring monument constructed in Phase 3
NOTES:
1. Actual locations of the settlement monitoring points will need to be confirmed following installation.
N
S
E
W
0 200 400
Feet
GP-001
GP-002
GP-003
GP-004
GP-005
GP-006
GP-007
GP-008
GP-009
GP-010
GP-011
GP-012
GP-013
GP-014
GP-015
GP-016
GP-017
GP-018
GP-019
GP-020
GP-021
GP-022
GP-023
GP-024
GP-025
GP-026
GP-027
GP-028
GP-029
GP-030
GP-031
GP-032
GP-033
GP-034
GP-035
GP-036
GP-037
GP-038
GP-039
GP-040
GP-041
GP-042
GP-043
GP-044
GP-045
GP-046
GP-047
GP-048
GP-049
GP-050
GP-051
GP-052
GP-053
GP-054
GP-055
GP-056
GP-057
GP-058
GP-059
GP-060
GP-061
GP-062
Boundary of the Waste Containment Area Final Cover Margin
Boundary of the Other Remediated Areas
The Waste Containment Area and Other Disturbed Area boundaries and topography shown are approximate (based on Remedial Design) and will be updated based on survey performed upon completion of the Remedial Action.
TYPICAL SETTLEMENT PLATE
1' min.
Top of rod to be protected by rebar cap when not in use
Top of soil cover
1" dia. iron rod welded to base plate. (Rod may be bent as necessary for portion of iron rod above cover to be plumb.)
3'
Cover soil
Fill above steel base plate to be compacted with hand-operated equipment to specify density
Steel base plate on geocomposite drainage layer (see Note 3)
NO SCALE
NOTES:
1. Initial measurement of the elevation of the top of rod will be taken upon completion of cover soil placement.
2. Settlement plate locations will be flagged and protected from construction vehicles and equipment.
3. Steel base plate 1/2" thick mild steel, 12"x12" or approved equivalent area.
Midnite Mine
FIGURE 1
WCA SETTLEMENT MONITORING POINT LOCATIONS
MWH

Attachment P-11

Routine Inspection and Maintenance of Temporary Water Management Ponds (Future Construction)

Midnite Mine Superfund Site
100 Percent Design

Attachment P-11 – Temporary Water Management Ponds – Operation, Maintenance, and Monitoring Plan

June 2015

Prepared for:

Dawn Mining Company
PO Box 250
Ford, Washington 990413

and

Newmont USA Limited
6363 South Fiddler's Green Circle
Greenwood Village, Colorado 80111

Prepared By:

MWH Americas, Inc.
2890 E. Cottonwood Parkway, Suite 300
Salt Lake City, UT 84121

TABLE OF CONTENTS

1.0 INTRODUCTION 1

1.1 PURPOSE, SCOPE, AND OBJECTIVES 1

2.0 DESCRIPTION OF TEMPORARY WATER MANAGEMENT PONDS 2

2.1 SOUTH POND 2

2.2 WEST POND 4

3.0 TEMPORARY WATER MANAGEMENT PONDS - OPERATION, MAINTENANCE AND MONITORING 5

3.1 WATER MANAGEMENT POND OPERATION 5

3.2 WATER MANAGEMENT POND INSPECTION AND MONITORING 5

3.3 MAINTENANCE OF TEMPORARY WATER MANAGEMENT PONDS 7

3.3.1 Geomembrane Liner System 7

3.3.2 Pumps 7

3.3.3 Water Level Monitoring Equipment 7

4.0 RECORD KEEPING AND REPORTING 8

4.1 GENERAL 8

4.2 REPORTING 8

5.0 REFERENCES 9

LIST OF TABLES

Table 1 Temporary Water Management Ponds – Operation, Maintenance, and Monitoring Summary

Table 2 Temporary Water Management Ponds – Action Leakage Rates

FIGURE

Figure 1 Temporary Water Management Ponds and Movement Monitoring Point Locations

LIST OF ACRONYMS/ABBREVIATIONS

CD	Consent Decree
DMOP	Dawn Mining Company LLC Operating Procedure
EPA	U.S. Environmental Protection Agency
HDPE	high density polyethylene
Mgal	million gallons
ODA	other disturbed areas
OM&M	Operation, Maintenance and Monitoring
PCP	Pollution Control Pond
RA	remedial action
Site	Midnite Mine Superfund Site
SWRP	South Waste Rock Pile
WCA	waste containment area
WTP	water treatment plant

1.0 INTRODUCTION

Temporary Water Management Ponds will be needed for the collection, storage, and conveyance of impacted water initially to the existing Water Treatment Plant (WTP) and later to the new WTP during the remedial action (RA) construction activities at the Midnite Mine Superfund Site (Site). During the execution of the RA, two temporary water management ponds referred to as the South and West Ponds will be built and operated as water storage sites, and necessary storage volumes, change over the course of construction. This plan presents the operation, maintenance, and monitoring (OM&M) activities for these temporary water management ponds.

As currently planned, implementation of the Selected Remedy will be conducted in three distinct phases where individual components of the overall remedy will be completed during each construction phase. The construction phases revolve around the Site water management and construction of these temporary water management ponds. Temporary water management ponds and OM&M activities for these ponds will be necessary from the time the Waste Containment Area (WCA) cover is installed on Pit 4 during Phase 1 and Pit 3 backfilling starts in Phase 2. At the end of Phase 1, the South Pond will be constructed to replace lost storage capacity in Pit 3 once is in no longer available for mine-affected water storage. The West Storage Pond will be constructed at the end of Phase 2 when the South Pond will be dismantled as the mine wastes on which it is constructed are backfilled into Pit 3. The West Pond will be smaller in size as more of the Site waters are shed clean and will be operated after construction activities cease. The West Pond will be dismantled only after flows stabilize possible 10 to 15 years after construction is completed.

This Water Management Ponds OM&M Plan is an attachment to the *Midnite Mine Superfund Site Operation, Maintenance, and Monitoring Plan*, which describes the OM&M for all of the components of the Selected Remedy requiring monitoring and maintenance.

1.1 PURPOSE, SCOPE, AND OBJECTIVES

The purpose of this Water Management Ponds OM&M Plan is to describe the inspection, maintenance and monitoring activities at the temporary South and West Ponds, and to establish frequencies for this work. The primary objectives of this plan are to:

- Monitor and maintain the temporary water management ponds relative to water level monitoring equipment

- Monitor and maintain the temporary water management ponds relative to liner leaks
- Monitor and maintain the temporary water management ponds relative to embankment settlement or lateral movement
- Monitor and maintain the West Pond stormwater diversion structures

To meet these objectives, this Water Management Ponds OM&M Plan includes the following:

- Identification of the pond components that require routine inspection, monitoring, and maintenance
- Documentation of procedures for inspection and maintenance of these pond components
- Listing of reporting requirements

2.0 DESCRIPTION OF TEMPORARY WATER MANAGEMENT PONDS

This section of the Temporary Water Management Ponds OM&M Plan describes the temporary water management ponds to be constructed during the RA and decommissioned based on the water storage requirements as construction progresses. Currently, impacted water is stored in Pit 3 ad Pit 4 prior to treatment at the existing WTP. During the course of the RA, these pits will sequentially be backfilled, and ultimately will no longer be available for water storage once backfilling commences. Two temporary storage ponds (the South Pond and the West Pond) will be used for temporary storage of impacted water during the various phases of RA construction as described above in Section 1.0.

The configuration of the temporary water management ponds as shown in the Midnite Water Management Ponds design (Appendix E and Section 10 Drawings of the Basis of Design Report) and discussed in this section are shown on Figure 1. The selected Contractor will be required, through the Drawings and Technical Specifications, to use specific liner materials for construction of the temporary water management ponds. They will be required to meet the project Performance Standards for containment of contaminated water which means continually monitoring the temporary ponds during the construction process. Once constructed, the ponds will be monitored as described in Section 3.0.

2.1 SOUTH POND

The South Pond will be constructed immediately upslope from the Pollution Control Pond (PCP) by excavating into the South Waste Rock Pile (SWRP) waste. Prior to excavation of the South

Pond, existing Ore and Protore Piles 5 and 8 will be removed from the SWRP surface in the South Pond area and placed in Pit 4 as part of Phase 1 construction. After removal of the Protore in this area, additional excavation of SWRP material to depths of up to 70 feet (ft) will occur to create the pond. The South Pond configuration includes an emergency overflow spillway on the east side of the pond as shown on Drawing 5-2. The emergency overflow spillway is an open-channel type spillway with an invert elevation at elevation 2,678 ft and a trapezoidal cross-section with a depth of 5 ft and a bottom width of 10 ft as shown on Drawing 5-15.

The South Pond will be a double-lined with leak detection between the primary and secondary geomembranes. The primary liner will consist of a 60-mil high density polyethylene (HDPE) geomembrane overlying a synthetic geonet leak detection layer. The leak detection layer will overlie a secondary liner constructed of a second HDPE geomembrane liner. The primary, geonet leak detection layer, and secondary liner will extend outside of the pond footprint and buried within a 4 ft wide by 3 ft deep anchor trench. The pond will include a divider berm in the pond bottom at elevation 2,635 ft that effectively forms two cells at low-water levels, allowing for maintenance of one side of the pond (cell) while still maintaining the ability to operate in the other cell. The pond bottom in each cell will be sloped toward sump areas, with sump bottoms located at elevation 2,619 ft. The South Pond will have an effective storage capacity of approximately 64 million gallons (Mgal) after accounting for the approximately 3.2 Mgal of dead storage (which corresponds to a pond elevation of 2,633 ft) that will be maintained in the pond bottom to provide ballast for the liner system and prevent wind uplift.

It is anticipated that the South Pond will contain very little water beyond the dead storage needed for liner ballast in each cell for most years when the WTP is operating normally. Under these low-water operating conditions, wind uplift and anchor trench capacity can become a concern. In order to address this concern, evaluations were conducted during the design process of the anchor trench capacity for the anchor trench configuration shown on Drawing 5-12, and of potential wind uplift for both construction and low-water (dead-storage pool) conditions. These analyses indicate the anchor trench design is more than adequate, and the proposed 60-mil HDPE primary (upper) geomembrane has adequate strength to withstand stresses induced by wind uplift for the maximum wind speeds recorded at the Site.

2.2 WEST POND

As stated earlier, the West Pond will replace the South Pond beginning in Phase 3 of the RA as the waste rock on which the South Pond is built is backfilled into Pit 3. The West Pond will remain operational until post-construction water management flows subside to the point where the equalization ponds adjacent to the new WTP provide sufficient storage volume for the overall water management system. The West Pond will be constructed by excavating soils from the impoundment area immediately upstream of the West Pond and using them for construction of the West Pond embankment across the Western Drainage. Use of material from the upstream impoundment area as a borrow source will increase the West Pond capacity and reduce the required embankment height and volume. A diversion channel will be constructed to route clean surface water flow from upstream areas in the Western Drainage around the east side of the West Pond and return it to the Western Drainage channel downstream of the embankment, as shown on Drawing 5-7. A second interceptor channel will be constructed to collect upland runoff from eastern slopes of the Western Drainage above the West Pond and route it to the diversion channel as shown on Drawing 5-7. These diversion and interceptor channels have been designed and sized to convey flows up to, and including those associated with the 500-year, 24-hour storm event.

The West Pond will be constructed using the same design and materials as the South Pond. The only exception is that the West Pond bottom will not include the divider berm and will consist of a single cell.

The West Pond as designed includes an emergency overflow spillway at the left abutment of the embankment as shown on Drawing 5-10. The emergency overflow spillway will be an open-channel type spillway with an invert elevation at elevation 2,555 feet and a trapezoidal cross-section with a depth of 5 feet and a bottom width of 10 feet as shown on Drawing 5-15. The pond bottom will be sloped toward a sumps area, with sump bottom located at elevation 2,605 ft. The West Pond will have an effective storage capacity of approximately 24 Mgal after accounting for approximately 1.4 Mgal of dead storage (which corresponds to a pond elevation of 2,619 ft) that will be maintained in the impoundment bottom to provide ballast for the liner system.

The West Pond will contain very little water, beyond the dead storage needed for liner ballast, when the WTP is operating normally. As with the South Pond, wind uplift and anchor trench capacity can become a concern under these low-water conditions. Similar to the South Pond,

evaluations of the anchor trench capacity were completed during design for the anchor trench configuration shown on Drawing 5-12, and of potential wind uplift for both construction and low-water (dead-storage pool) conditions. These analyses indicate the anchor trench design is more than adequate, and the proposed 60-mil HDPE primary (upper) geomembrane has adequate strength to withstand stresses induced by wind uplift for the maximum wind speeds recorded at the Site.

3.0 TEMPORARY WATER MANAGEMENT PONDS - OPERATION, MAINTENANCE AND MONITORING

Water management pond OM&M will be performed from the time of Pit 3 backfilling is commences at the beginning of Phase 2 and into post-construction monitoring. Observation and documentation through inspection reports will enable prompt repair scheduling and execution of pond repair or maintenance. The complete monitoring plan, including the individual monitoring tasks, schedule, monitoring criteria, and maintenance, is discussed below.

3.1 WATER MANAGEMENT POND OPERATION

The temporary water management ponds will be used for water storage prior to transfer to the WTP for treatment and discharge. Water from the ponds will be transferred to the WTP via pumps and conveyed by temporary influent pipelines. Details regarding the OM&M of these pipelines are presented in the *WTP Influent and Effluent Pipelines OM&M Plan* (MWH 2015).

Water management and operation of the South and West Ponds will be performed in accordance with a new Dawn Mining Company Operating procedure (DMOP) that will be prepared during Phase 1 of the RA prior to the initiation of construction of the South Pond.

3.2 WATER MANAGEMENT POND INSPECTION AND MONITORING

The monitoring requirements for the water management ponds are summarized in Table 1. The inspections will be performed to be protective of the liner system. Vehicular access along existing site roads will allow the observations from multiple locations along the ponds. The actual inspections will be conducted on foot to avoid damage to the liner or embankments. The Temporary Water Management Ponds will be subjected to the following inspections and monitoring requirements:

1) Routine Inspections:

a. Leak Detection/Submersible Pump Risers – the surface completions for the leak detection and submersible pump risers will be inspected for damage.

b. Pumps – the submersible pump and leak detection pump will be inspected for signs of wear

c. Leak detection – Leak detection sumps will be monitored for the presence of water.

d. Water Level Monitoring Equipment – Equipment used for monitoring of water levels in the ponds and leak detection sumps will be checked for proper operation.

e. Embankment movement monitoring - monuments installed along the embankment of the West Pond and perimeter of the South Pond will be visually observed to determine if they are in working condition. Locations of the movement monuments and a schematic for a typical movement monitoring point are presented in Figure 1.

f. Pond embankments – the embankments also will be visually inspected for signs of erosion, seepage, and instability.

g. Stormwater diversion controls (i.e., diversion) – The diversion channels around the West Pond will be observed to determine if they are operational.

h. Liner Positioning – the primary geomembrane liner will be inspected during wind events for movement. These inspections will occur when measured wind speed at the site is greater than 35 miles per hour.

2) Routine Measurements:

a. Movement Survey

b. Flow rates into individual leak detection sumps.

3) Non-Routine Rain Storm and Seismic Events

Non-routine inspections for signs of stormwater erosion/damage to the West Pond stormwater diversion controls will commence within one day and completed within seven days after a:

a. 25-year, 24-hour storm event or

b. Seismic event greater than a magnitude 5.0 (Richter Scale) with an epicenter within 15 miles of the Site.

The monitoring frequency and unacceptable conditions (action triggers) for each of these monitoring metrics are summarized in Table 1 along with the associated (maintenance) response actions. In the event that water is detected in the leak detection sumps, a four-level system for allowable leakage rates and appropriate response actions will be followed as presented in Table 2.

3.3 MAINTENANCE OF TEMPORARY WATER MANAGEMENT PONDS

The purpose of the maintenance procedures for the Temporary Water Management Ponds is to ensure that these facilities perform as designed and that maintenance activities ensure their long-term integrity and viability. This is accomplished by ensuring the materials and maintenance practices are consistent with the final design and specifications. Maintenance activities for the water management ponds are:

3.3.1 Geomembrane Liner System

Although damage to the pond liner is considered unlikely, the liner is susceptible to damage. If damage is noted during routine inspections (as defined in Table 1), repair procedures may include replacement or patching of damaged liner. Corrective action repairs and maintenance will be prioritized following inspections indicating there are problems in accordance with Table 1.

3.3.2 Pumps

Depending on water chemistry, submersible pumps can be susceptible to fouling. In addition, pump components are susceptible to normal wear and tear during operation. Maintenance of the submersible pumps will be in accordance with manufacturer's recommendations.

3.3.3 Water Level Monitoring Equipment

Pressure transducers or other equipment used for monitoring water levels in the temporary water management ponds and detecting the presence of water in the leak detection sumps will be checked periodically for proper operation in accordance with manufacturer's Stormwater Diversion Channels.

The stormwater diversion channels around the West Pond as described in Section 2.2 will be observed to determine if there is structural damage and maintained free of debris and large vegetation. If structural damage or significant debris /vegetation is found in these structures

during inspections it will require corrective action. Corrective action repairs and maintenance will be prioritized following inspections indicating there are problems and scheduled within 30 days.

4.0 RECORD KEEPING AND REPORTING

4.1 GENERAL

Documentation of Temporary Water Management Pond OM&M activities will be completed and retained pursuant to the requirements of the Consent Decree (CD; EPA, 2011). The existing Pond and Tank Inspection form will be used during the initial OM&M efforts and may be revised at a later date.

4.2 REPORTING

In accordance with the *Midnite Mine Superfund Site Operation, Maintenance, and Monitoring Plan,* to which this plan is attached, an annual summary report of the monitoring and maintenance activities will be prepared pursuant to all Site OM&M activities related to:

- Cover System and other disturbed areas (ODAs) Inspection and Maintenance
- Midnite Water Treatment Plant
- Fence Inspection and Maintenance
- Site Access Roads and Culverts
- Surface Water Diversions
- Alluvial Groundwater Controls
- Ponds and Tanks
- WTP Influent and Effluent Pipelines
- Pit Area Dewatering and Underdrain Wells

This yearly summary report will be transmitted to the EPA by March 31 annually, summarizing the prior year's activities.

5.0 REFERENCES

MWH Americas, Inc. (MWH), 2015. Midnite Mine Superfund Site 100 Percent Basis of Design Report. Prepared on behalf of Newmont USA Limited and Dawn Mining Company for submittal to U.S. Environmental Protection Agency, Region 10. June.

U.S. EPA, 2011. Consent Decree Statement of Work for the Remedial Action for the Midnite Mine Superfund Site, Spokane Indian Reservation, Washington. Civil Action No. CV-05-020-JLQ. United States of America, Plaintiff v. Dawn Mining Company, LLC and Newmont USA Limited, Defendants. August.

TABLES

TABLE 1
TEMPORARY WATER MANAGEMENT PONDS - MIDNITE MINE
OPERATION, MAINTENANCE, AND MONITORING SUMMARY

Post-Remedial Monitoring Element[1]	Measurement/Inspection	Activity Frequency	Action Trigger/Unacceptable Condition	Response Action
Routine Inspections				
	Movement Monument	Quarterly	Damaged settlement monument based on visual inspection	Repairs / maintenance will be prioritize and scheduled within 30 days then completed within the field season.
	Embankment Inspections	Quarterly	Visible seepage, erosion features, or bulging or other signs of instability	Engineering evaluation and repair of impacted areas will be completed within 14 days.
	Water Level Monitoring Equipment	Weekly	Transducers fail to record data	Repairs / maintenance will be completed within 30 days. Maintenance and repair activities will be in accordance with manufacturer's recommendations.
	Pumps	Quarterly	Decrease in discharge flowrates, increase in pump discharge pressures, changes in electrical draws outside of manufacturer listed ranges.	Repairs / maintenance will be prioritize and scheduled within 30 days then completed within the field season. A backup pump will be on hand in case of a pump failure. Maintenance and repair activities will be in accordance with manufacturer's recommendations.
	Leak Detection Risers	Quarterly	Damage to surface completions or components	Repairs / maintenance will be prioritize and scheduled within 30 days then completed within the field season.
	Submersible Pump Risers	Quarterly	Damage to surface completions or components	Repairs / maintenance will be prioritize and scheduled within 30 days then completed within the field season.
	Primary Geomembrane Liner Uplift (Wind Events ONLY)	Inspection to occur ONLY when wind speed exceeds 35 mph (as measured by the on-site weather station)	Flapping, tears to liner material, liner pull out at anchor trench or reversal of curvature at corner panels.	Engineering evaluation and repair of impacted areas will be completed within 14 days. Corrective action could include additional ballast.
	Stormwater Diversion Controls (West Pond ONLY)	Quarterly	Signs of structural damage to or sediment/debris buildup within bench channels and downdrains.	Stormwater diversion structures will be cleared of shrubs or other large vegetation. Structural damage that is observed will be prioritize and scheduled within 30 days then completed within the field season unless any of the observed damages could present an immediate threat to the WCA cover integrity.
RoutineMeasurements				
	Flow Rate into Leak Detection Sumps	Weekly	See Table 3-2	See Table 3-2
	Water Level Monitoring	Weekly	Water level below dead-storage pool elevation of 2,633 ft (South Pond) or 2,619 ft (West Pond)	Engineering evaluation and determine corrective action on case-by-case basis based on results of engineering evaluation.
	Movement Survey of Pond Embankments	Movement monitoring will be performed quarterly.	If the amount of movement over 4 quarters is greater than 0.1 ft	Engineering evaluation and repair of impacted areas within 14 days.
Non-Routine Events/Inspections				
Rain Storm Event: 25-Year, 24-Hour Storm Event Inspections (2.2 inches of rain in 24 hours)	Stormwater Diversion Controls (West Pond ONLY)	Commence within one day and completed with seven days of the triggering storm or seismic event except if not feasible due to inaccessibility to the Site or snow cover (possible from November through May).	Damage to or sediment / debris buildup within diversion control infrastructure.	As above in first response
Seismic Event: Inspections (magnitude 5.0 earthquake within 15 miles)	Settlement Survey of Pond Embankments	As Immediately Above	Exceeds acceptable settlement amount based on evaluation by Engineer.	Engineering evaluation and repair of impacted areas within 14 days.

Notes:
[1] This list of monitoring and maintenance elements apply to temporary water management ponds (South Pond and West Pond).

TABLE 2
TEMPORARY WATER MANAGEMENT PONDS - MIDNITE MINE
ACTION LEAKAGE RATES

Action Leakage Level	Action Trigger/Unacceptable Condition	Response Action
Level 1 - Operating Leakage Level (OLR)	A Level 1 OLR exists if the leakage rate into individual leak detection sumps is less than 20 gallons per acre per day (gpad).	At a leakage rate of less than 20 gpad, the system is operating as designed and monitoring of leakage rates through the primary liner will be conducted on a weekly basis.
Level 2 - Increased Leakage Monitoring and Reporting (MR)	A Level 2 MR exists if the leakage rate into individual leak detection sumps exceeds 20 gpad but is less than 200 gpad.	If the leakage rate exceeds 20 gpad but is less than 200 gpad, the flow rate will be reported VERBALLY to the EPA within 24 hours of the determination and the frequency of monitoring of leak detection flow rates will be increased to daily during the routine work week.
Level 3 - Leak Investigation and Action Plan (LIAP)	A Level 3 LIAP exists if the leakage rate into individual leak detection sumps exceeds 200 gpad but are less than 500 gpad.	Monitoring and reporting at a frequency described for Level 2 (above) will be initiated. In addition, the source(s) of the leakage will be identified and a written action plan will be prepared and submitted to EPA. In addition to identification of the source of the leakage, additional actions that may be included at the LIAP level include continued monitoring, operating at a reduced water level, increased inspection of downstream embankments, or repair of the primary liner.
Level 4 - Immediate Response Level (IRL)	A level 4 IRL exists if the leakage rate into any leak detection sump exceeds 500 gpad.	Monitoring and reporting at a frequency described for Level 2 (above) will be initiated. The exposed liner surface in the pond will be inspected immediately and the water level in the pond will immediately be drawn down for subsequent liner inspection. The pond water level will be drawn down in incremental stages such that the liner and leak detection system can be inspected and the condition assessed. Once the source(s) of the leakage is identified, all necessary repairs will be made prior to refiling the cell(s) where leakage occurred.

Notes:

FIGURE

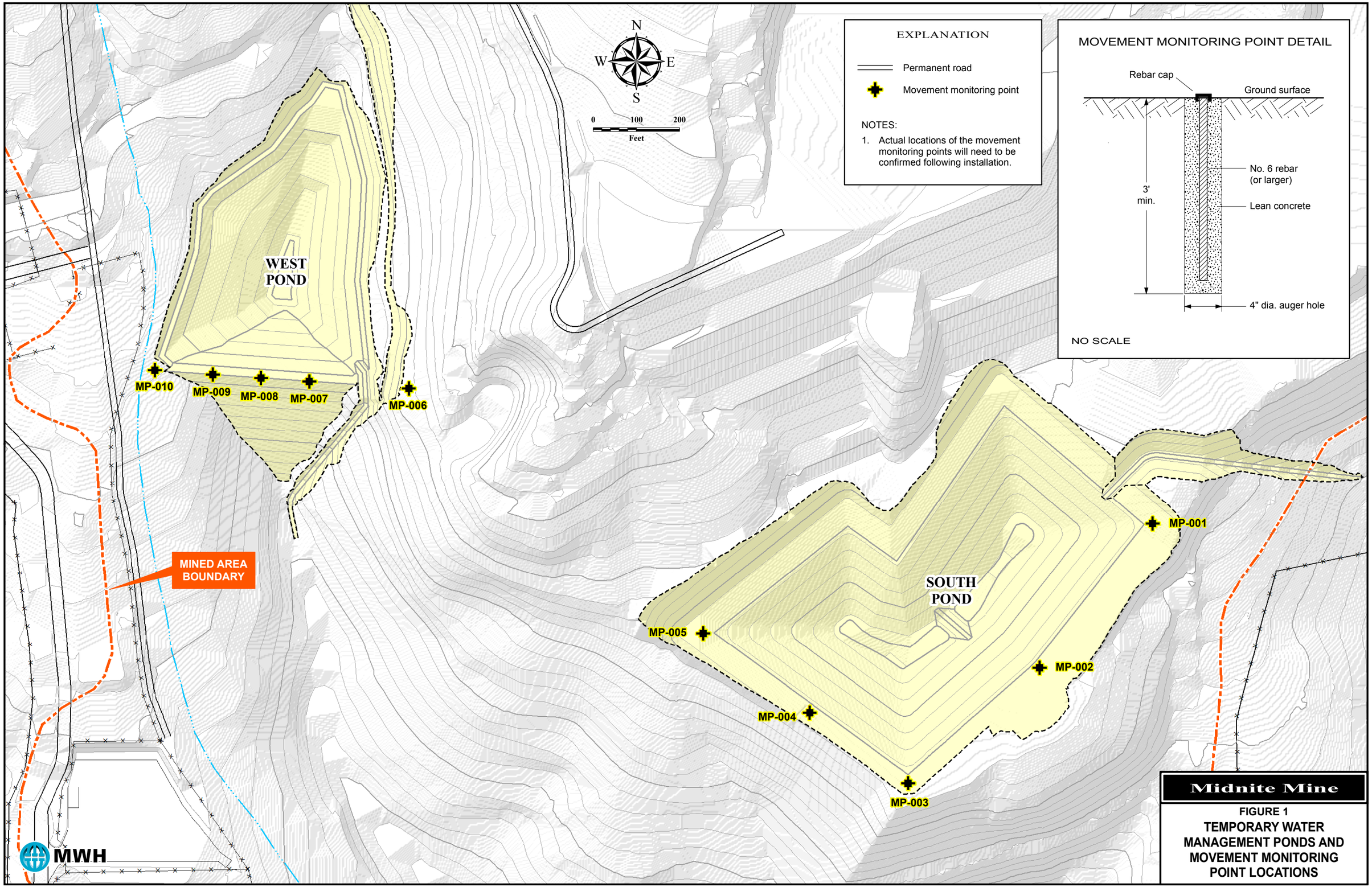

DRAWN BY D. Severson

12 June 2015

J:\Industrial Projects\MIDNITE MINE\Deliverables_Working Documents\OMM_Influent_Effluent\FIGURES\Fig 1_MidniteMine_Temp Water Mgmt Ponds and Movement Mon Point Locations_Jun2015.mxd